International General Catalogue

INDUSTRIAL SWITCHING & PROTECTION SYSTEMS **2009**

socomec
Innovative Power Solutions

CONTENTS

Teams of specialised designers, highly integrated production and a dedicated sales network have enabled the SOCOMEC group to develop the most complete ranges on the market for high quality power supply, switchgear, and monitoring and protection of low voltage electrical installations. Our “Switching and Protection Systems” catalogue covers three distinct areas:

SWITCHING

CONTROL AND PROTECTION

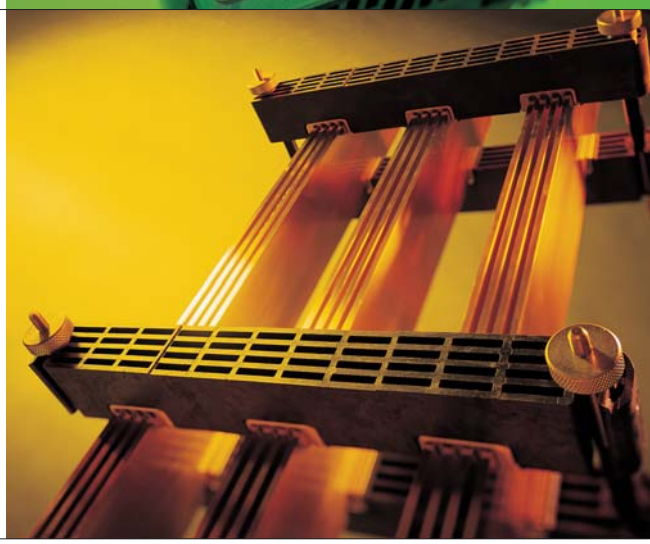

MOUNTING AND CABLING

SYSTEMS

Backed up by significant research and development resources, our offer is constantly evolving to meet the changing needs of our clients.
For more than 85 years, our partner-clients have recognised the quality of our products, our attentiveness to their needs, our adaptability and our commitment.
SOCOMEC is an independent group. Its international dimension gives it the ability to rise to the challenge wherenever you need it to.

This document is not a contract. SOCOMEC reserves the right to modify features without prior notice in view of continued improvement. 2008 - 2009

SERVICES — II
SERVICES & ASSISTANCE — IV
ALPHABETICAL INDEX — VI
REFERENCES LIST — X

LOAD BREAK SWITCHES — A.4 - A.79
CHANGEOVER SWITCHES — A.80 - A.151
FUSE COMBINATION SWITCHES — A.152 - A.221
FUSE PROTECTION — A.222 - A.261
UL / CSA RANGE — A.262 - A.309
PUBLIC POWER DISTRIBUTION — A.310 - A.315

ELECTRICAL MEASUREMENT — B.4 - B.23
ENERGY MANAGEMENT — B.24 - B.69
EARTH LEAKAGE RELAYS — B.70 - B.85
NETWORK PROTECTION — B.86 - B.87

ENCLOSED SWITCHES — C.4 - C.17
POWER FACTOR CORRECTION — C.18 - C.21
EMPTY ENCLOSURES — C.22 - C.29
MOUNTING AND CABLING ACCESSORIES — C.30 - C.71

APPLICATION GUIDE — D.2 - D.73
UNINTERRUPTIBLE POWER SUPPLIES — E.2 - E.5
CONTACT — XVIII

This document is not a contract. SOCOMEC reserves the right to modify features without prior notice in view of continued improvement. 2008 - 2009

A high-tech organisation at your service

> The company on your doorstep

We attach great importance to supplying you with the best product to suit your requirements. That's why we have a fully integrated sales network that really understands your industrial environment. Relevant departments work closely with you, depending on the project.

With SOCOMEC, our specialists are always close to hand should you need them.

> Constant innovation

Technological scanning is second nature for our people. Working hand-in-hand with numerous technological partners means we can continually build on our expertise.

And with substantial R&D resources behind us we are able to offer the right product to satisfy your every need.

Our innovations benefit your performance.

> The right products

We offer you the most comprehensive range of switching and protection systems available on the market: thanks to 'customised' solutions adapted from standard products, our range is able to cover a wide spectrum of applications.

Concentrating on modular design and a full range of easy-to-mount accessories also means that you benefit from many complementary and cost-effective functions.

SITE 117 A

SITE 118 A

SITE 041 A

> Delivering on time

Real-time order and logistics management is our guarantee of a prompt and efficient delivery service.

Count on us to get your product to you on time, everytime.

> Friendly and direct contact

Being an independent manufacturer also lends SOCOMEC its own special 'style':

Doing business with us means being in contact with friendly and responsible people ; committed people who care about giving the right solution to meet your requirements.

> Integrated production with shorter lead-times

As an independent manufacturer, SOCOMEC exercises complete control over its strategic design and manufacturing processes and makes full use of the latest advances as far as flexibility is concerned.

Our integrated production organised in autonomous working groups offers customers guaranteed manufacturing quality with full control over delivery times.

> Customer satisfaction

Product quality is assured in our own ASEFA (French Association of Certified Testing Stations) and LOVAG (Low Voltage Agreement Group) - certified testing laboratory. Numerous agreements and certifications (not forgetting a proven and tested quality assurance) ensure that our equipment fully complies with international standards: KEMA, CEBEC, UL, CSA, ASTA, Lloyd's Register of Shipping, Bureau Véritas, BBJ-SEP, EZU, GOST-R…

Universal and adapted solutions, whatever your configuration - our expertise assures your complete satisfaction.

CORPO 175 A

This document is not a contract. SOCOMEC reserves the right to modify features without prior notice in view of continued improvement. 2008 - 2009

Adapted provision of services

> Pierre SIAT electrical test station

Since 1965, the SOCOMEC production site has also included a test facility.
This laboratory is a member of ASEFA (the French Association of Electrical Appliance Test Facilities) and is accredited by COFRAC, the French accreditation committee.

Now you can benefit from SOCOMEC's substantial expertise by having your own tests conducted within this specialist facility.

Our team of dedicated professionals will assist you in carrying out tests for compliance with French, European or world standards.

Types of tests performed: dielectric tests, heat tests, mechanical endurance tests, system tests, climatic tests, short-circuit tests.

CORPO 163 A

> Metrology

Can you guarantee the quality of the measurements that you take during the development, production or testing of your products?

SOCOMEC provides you with its metrological know-how to inspect and certify your measuring tools.

CORPO 024 A

APPLI 079 A

This document is not a contract. SOCOMEC reserves the right to modify features without prior notice in view of continued improvement. 2008 - 2009

Services & Technical Assistance: assuring your peace of mind

> Manufacturer's expertise

Over several decades, SOCOMEC's Switching and Protection Systems have acquired a distinguished reputation in the domain of low voltage electrical distribution equipment testing and safety.

Our manufacturer's expertise naturally extends to a complete offer of services designed to help you get the most out of your installation.

> Optimum service guaranteed

Supply transfer in complete safety

Changeover switches are strategic components that ensure continuity of service of supplies. In order to guarantee complete operational safety, we will implement our range of innovative supply transfer solutions.

Your energy consumption comprehensively managed

Monitoring of energy consumption within any installation is one of your primary operational considerations. To this end, our consultant engineers will make use of SOCOMEC's range of market leading energy measurement metering and management systems.

Effective insulation monitoring of your electrical installation

To ensure that your insulation fault monitoring and location system operates to its optimum capacity, our team of specialists perform all operations on site. This means that you benefit from renowned expertise, as well as solutions tailored to the specific monitoring requirements of your electrical installation.

Cost-effective electrical usage

The presence of a specialist enables you to reduce your reactive energy costs, limit your energy losses by Joule effect, cut end of line voltage drops or increase your available active power… A real return on investment.

CORPO 174 A

This document is not a contract. SOCOMEC reserves the right to modify features without prior notice in view of continued improvement. 2008 - 2009

> A team of "field" specialists

Specially adapted skills

Our intervention team consists of field personnel specialising in our specific domains and experienced in the maintenance of industrial electrical systems. You therefore benefit from a dual competence: technical expertise adapted to the products used and a practical knowledge of your specific needs.

Reassuringly close at hand

Our geographical coverage means that we are close to each user and can respond quickly to all requests, providing a complete service from the technical diagnostics before repair right up to implementation of the most suitable solutions for your installation.

Constantly attentive to your needs

True to our own principles, we encourage direct and friendly contact.
Our interventions are targeted solutions to a single problem: yours. Our engineers are always very attentive to ensure that we provide you with the most relevant technical support and advice. There's no need to worry about your investments…

CQRPO 164 A

CQRPO 155 A

> Tailor-made features

Commissioning

Installation of your equipment is carried out by a specialist, and is totally compatible with and adapted to your use.

Tailor-made features

A broad range of features tailored to respond to the particular requirements and limitations of your electrical installation, and to help you deal with specific operational demands.

Training

You will receive training, specially adapted to your needs, in order to familiarise you with our equipment and enable you to use it to your best advantage.

Maintenance contracts

A wide range of preventive or corrective maintenance options designed to suit your installation and its environment, and to ensure continuity of service of your electrical networks.

Do not hesitate to contact our SOCOMEC sales office to discuss a service package tailored to your requirements.

APPLI 060 A

This document is not a contract. SOCOMEC reserves the right to modify features without prior notice in view of continued improvement. 2008 - 2009

A

Analogue meters (measuring up to all of your needs - Electrical measurement) _____ B.7
Application guide _____ D.2
ATEX enclosures _____ C.14
ATS BY-PASS switches (other changeover switches) _____ A.150
ATyS _____ A.112
ATyS C30 _____ A.146
ATyS C40 _____ A.146
ATyS VISION software _____ A.148
Automatic COSYS (reactive energy compensation) _____ C.19

B

BILLING APPLICATION software _____ B.68
BLOCAL aluminium systems _____ C.70
Breaking and earthing (changeover switches) _____ A.80
BS88 industrial fuselinks _____ A.224
Busbar for outgoing realisation (mounting and cabling accessories) _____ C.30
Busbar supports _____ C.36
BY-PASS (changeover switches) _____ A.80

C

Cable clamps and cage terminal (mounting and cabling accessories) _____ C.31
Cable trunking (mounting and cabling accessories) _____ C.31
CADRYS AE (empty enclosures) _____ C.23
CADRYS DELTA modular _____ C.26
CADRYS enclosures _____ C.25
CADRYS monobloc (empty enclosures) _____ C.23
CADRYS SBA (empty enclosures) _____ C.23
Changeover between two supplies (changeover switches) _____ A.80
Changeover between two supplies (load break switches) _____ A.4
Changeover switches _____ A.80
Closest to the LV consumer (public power distribution) _____ A.310
CMP _____ A.74
COMBIESTER _____ C.24
Communication (network analysis) _____ B.44
Communication interfaces _____ B.60
COMO C _____ A.82
Compensation battery equipped with capacitors to automatic power factor correction system (reactive energy compensation) _____ C.18
Compensation battery equipped with capacitors to fixed power factor correction system (reactive energy compensation) _____ C.18
Compensation battery equipped with capacitors to semi-automatic power factor correction system (reactive energy compensation) _____ C.18
Connecting the RS485 link (communication interfaces) _____ B.60
Connection systems (mounting and cabling accessories) _____ C.30
Construction of structures and frames for mounting equipment (mounting and cabling accessories) _____ C.30
Control and energy management for your electrical networks (other products - Public power distribution) _____ A.315
CONTROL VISION software _____ B.64
Coordination accessories (SURGYS®) _____ B.86
Core balance transformers _____ B.82
COSYS power factor correction relays _____ C.20
COSYS racks pre-equipped (reactive energy compensation) _____ C.19
COUNTIS Adc _____ B.28
COUNTIS AM10 _____ B.26
COUNTIS AMd _____ B.30
COUNTIS AMt _____ B.30
COUNTIS ATd _____ B.36
COUNTIS ATiv2 _____ B.32
COUNTIS ATPv2 _____ B.38
COUNTIS ATv2 _____ B.32
COUNTIS Ci _____ B.42
Current transformers _____ B.12
Current transformers and protection devices (other products - Public power distribution) _____ A.315
Customised solutions (enclosed switches) _____ C.16

D

Digital meters (measuring up to all of your needs - Electrical measurement) _____ B.7
DIRIS A20 _____ B.50
DIRIS A40 _____ B.54
DIRIS A41 _____ B.54
DIRIS Am _____ B.46
DIRIS VISION software _____ B.62
Distribution blocks _____ C.62

This document is not a contract. SOCOMEC reserves the right to modify features without prior notice in view of continued improvement. 2008 - 2009

Distribution busbar
(mounting and cabling accessories) _____C.31
Distribution surge protector (SURGYS®) _____B.87
Distribution systems
(mounting and cabling accessories) _____C.30

E

Earth leakage relays_____B.70
Electrical measurement _____B.4
Emergency breaking (load break switches) _____A.4
Emergency breaking (UL / CSA range)_____A.262
Empty enclosures _____C.22
Enclosed switches_____C.4
Enclosed switches (changeover switches)_____A.80
Enclosed switches (fuse combination switches) __A.152
Enclosed switches (load break switches)_____A.4
Energy centralisation (energy metering) _____B.24
Energy management (network analysis) _____B.44
Energy metering _____B.24
Environment to atmospheric corrosion
(enclosed switches) _____C.4
Environment to chemical attack
(enclosed switches) _____C.4
Environment to contamination hazard
(enclosed switches) _____C.4
Environment to dust hazard
(enclosed switches) _____C.4
Environment to mechanical risk
(enclosed switches) _____C.4
Equipment protection (SURGYS®)_____B.86
Ethernet / RS232-RS485 interface
(communication interfaces) _____B.61
External controller:
Dual genset application (ATyS) _____A.112
External controller: Main/Main
or Gen/Main applications (ATyS) _____A.112

F

Fixed COSYS (reactive energy compensation) ____C.18
Fuse bases_____A.256
Fuse combination switches_____A.152
Fuse disconnects (UL / CSA range)_____A.263
Fuse protection _____A.222
Fuse-protected switchgear
(other products - Public power distribution) _____A.315
Fused changeover switches
(other fuse combination switches)_____A.221
FUSERBLOC _____A.158
FUSERBLOC and high speed fuses (UR)_____A.200
FUSERBLOC solar application
(other fuse combination switches)_____A.221
FUSERBLOC UL _____A.290
FUSERBLOC with rear connection
(other fuse combination switches)_____A.221
FUSOMAT_____A.208

G

Generator set output (load break switches) _____A.4
Generator set output (UL / CSA range) _____A.262
Guidance, fixing and protection of beams
of cables (mounting and cabling accessories)____C.30

H

Handle between poles
(other fuse combination switches)_____A.220
Harmonics analysis (network analysis) _____B.44
High speed fuses (UR)_____A.242
Hours run (measuring up to all of your needs -
Electrical measurement) _____B.7

I

In the distribution cabinets
(public power distribution) _____A.310
In the MV / LV transformer station
(public power distribution) _____A.310
Incomers (fuse protection)_____A.222
Indicators _____B.7
Insulated enclosures (empty enclosures)_____C.22
Insulated flexible copper bars_____C.34
IP55 stainless steel enclosure
(customised solutions - Enclosed switches) _____C.16

L

LBS UL _____A.264
Load break switches _____A.4
Load changeover (ATyS) _____A.112
Local safety breaking (load break switches)_____A.4
Local safety breaking (UL / CSA range) _____A.262
Low current surge protector (SURGYS®) _____B.87
Low voltage main panel - fuse protection
(customised solutions - Enclosed switches) _____C.17
LV main panels (empty enclosures) _____C.22

This document is not a contract. SOCOMEC reserves the right to modify features
without prior notice in view of continued improvement. 2008 - 2009

M

Machine control (load break switches) ____ A.4
Machine control (UL / CSA range) ____ A.262
Main busbar realisation (mounting and cabling accessories) ____ C.30
Make before break contact motorised changeover switches (other changeover switches) ____ A.151
MAXIPOL (empty enclosures) ____ C.22
Measurement devices (electrical measurement) ____ B.5
Measuring kit equipped with Rogowski coils (other products - Public power distribution) ____ A.315
Measuring up to all of your needs (electrical measurement) ____ B.6
Mechanical systems software ____ C.60
Metering for 48 VAC networks (energy metering) ____ B.24
Metering for LV three-phase networks (energy metering) ____ B.24
Metering for single-phase networks (energy metering) ____ B.24
MINIPOL (empty enclosures) ____ C.22
Modular transducers (measuring up to all of your needs - Electrical measurement) ____ B.6
Monitoring and control (network analysis) ____ B.44
Monitoring and control (empty enclosures) ____ C.22
Monitoring and protection of circuits with inverters (earth leakage relays) ____ B.70
Monitoring and protection of DC circuits (earth leakage relays) ____ B.70
Monitoring and protection of final circuits: motors… (earth leakage relays) ____ B.70
Monitoring and protection of general distribution (earth leakage relays) ____ B.70
Monitoring and protection of premises where there is a risk of fire (earth leakage relays) ____ B.70
Monitoring parameters (network analysis) ____ B.44
Motor circuits (fuse combination switches) ____ A.152
Motor circuits (fuse protection) ____ A.222
Motor circuits (UL / CSA range) ____ A.262
Motorised mixed pole changeover switches (other changeover switches) ____ A.151
Mounting and cabling accessories ____ C.30
Mounting rails and profiles ____ C.71
Multi-indicators (electrical measurement) ____ B.4
Multi-measurement and metering (network analysis) ____ B.44
Multipolar switches & mixed ratings (other fuse combination switches) ____ A.220
Multipolar switches (other load break switches) ____ A.78
MULTIS L72 ____ B.8
MULTIS LMg ____ B.10
MULTIS LMp ____ B.10

N

Network analysis ____ B.44
Network coupling (load break switches) ____ A.4
Network coupling (UL / CSA range) ____ A.262
Network protection (SURGYS®) ____ B.86
NFC-DIN industrial fuselinks ____ A.232
Non fuse disconnects (UL / CSA range) ____ A.263
Normal/backup transfer with an external automatic control (ATyS) ____ A.112
Normal/backup transfer with an internal automatic control - ATS (ATyS) ____ A.112

O

On load switch disconnectors (other products - Public power distribution) ____ A.314
Other changeover switches ____ A.150
Other components in the LV public distribution networks (other products - Public power distribution) ____ A.314
Other fuse combination switches ____ A.220
Other load break switches ____ A.78
Other products (public power distribution) ____ A.314

P

Panel mounted devices (electrical measurement) ____ B.4
Panel or DIN rail mounted devices (electrical measurement) ____ B.5
Plug-in fuse combination switches (other fuse combination switches) ____ A.221
Polyester enclosure (customised solutions - Enclosed switches) ____ C.16
Power electronics (fuse protection) ____ A.222
Power terminals ____ C.68
Primary surge protector (SURGYS®) ____ B.86
Protection against transient overvoltages SURGYS® ____ B.86
Protection for main distribution panel with sensitive receivers (SURGYS®) ____ B.86
PTI (measuring up to all of your needs - Electrical measurement) ____ B.6
Public power distribution ____ A.310

R

Reactive energy compensation ____ C.18
RESYS B 420 ____ B.72
RESYS M20 ____ B.80

This document is not a contract. SOCOMEC reserves the right to modify features without prior notice in view of continued improvement. 2008 - 2009

RESYS M40 _____ B.76
RESYS P40 _____ B.78
RESYS Type B _____ B.74
Reversing direction of operation
(changeover switches) _____ A.80
Rigid copper bars _____ C.32
RM _____ A.252
RMS _____ A.252
RS232 / RS485 interface
(communication interfaces) _____ B.60
RS422 / RS485 repeater
(communication interfaces) _____ B.60
RTC / RS232-RS485 modem
(communication interfaces) _____ B.61

S

Safety enclosures _____ C.6
Section distribution (empty enclosures) _____ C.22
Section feeders (fuse combination switches) ____ A.152
Section feeders (fuse protection) _____ A.222
Section feeders (load break switches) _____ A.4
Section feeders (UL / CSA range) _____ A.262
Section incomers (fuse combination switches) ___ A.152
Section incomers (load break switches) _____ A.4
Section incomers (UL / CSA range) _____ A.262
Semi-conductor protection - DRIVES, UPS…
(other fuse combination switches) _____ A.220
Semi-conductor protection
(fuse combination switches) _____ A.152
Shunts (measuring up to all of your needs -
Electrical measurement) _____ B.6
SIDER _____ A.48
SIDER changeover switches
(other changeover switches) _____ A.150
SIDERMAT _____ A.62
SIRCO _____ A.26
SIRCO DC _____ A.70
SIRCO for earthing (other load break switches) ____ A.79
SIRCO High Withstand _____ A.44
SIRCO M & MV _____ A.8
SIRCO motorised load break switches
(other load break switches) _____ A.79
SIRCO range with over rated neutral
(other load break switches) _____ A.78
SIRCO UL _____ A.274
SIRCO VM1 changeover switches _____ A.88
SIRCOVER and SIRCOVER BY-PASS _____ A.94
SIRCOVER M changeover switches _____ A.80
Specific range for 1000 V network
(other load break switches) _____ A.78
Specific Substation Cable Distribution Boards
(other products - Public power distribution) _____ A.314
Steel enclosures (empty enclosures) _____ C.23
Substation Cable Distribution Board
(other products - Public power distribution) _____ A.314
Subtransmission (empty enclosures) _____ C.22
Switching and protection enclosure
(customised solutions - Enclosed switches) _____ C.17
Switching between two loads
(changeover switches) _____ A.80
Switching between two loads
(load break switches) _____ A.4

T

Terminal distribution (empty enclosures) _____ C.22
The ATyS range _____ A.114
The FUSERBLOC range _____ A.154
The SIRCO M & MV range _____ A.6
TIPI _____ A.312
Transducers (measuring up to all of your needs -
Electrical measurement) _____ B.6
Transformer output (fuse combination switches) __ A.152
TRS _____ A.313
Type of lightning protector (SURGYS®) _____ B.86

U

UL / CSA range _____ A.262
UL fuses _____ A.308
Uninterruptible power supplies _____ E.2
USB / RS485 interface
(communication interfaces) _____ B.60
Using the Ethernet network
(communication interfaces) _____ B.61
Using the telephone network
(communication interfaces) _____ B.61

V

Voltage transformers
(measuring up to all of your needs -
Electrical measurement) _____ B.6

W

Wiring systems (fuse protection) _____ A.222
Wiring systems (UL / CSA range) _____ A.262

This document is not a contract. SOCOMEC reserves the right to modify features
without prior notice in view of continued improvement. 2008 - 2009

REFERENCES	PAGES
1309 **0001**	A.122, A.125, A.133
1309 **0002**	A.133
1309 **4xxx**	A.122, A.125
1309 **9xxx**	A.133
132x **xxxx**	A.122
1353 **xxxx**	A.122
1354 **xxxx**	A.122
1359 **0000**	A.122, A.125, A.133
136x **xxxx**	A.122
1399 **4006**	A.11, A.16, A.122, A.125, A.133
1400 **1020**	A.28, A.30, A.32, A.49, A.50, A.52, A.71, A.96 to A.98, A.100, A.171, A.203, A.280, A.293, A.294, A.298
1400 **1025**	A.32
1400 **1032**	A.28, A.30, A.32, A.49, A.52, A.71, A.96 to A.98, A.100, A.161, A.162, A.165, A.166, A.171, A.172, A.201, A.203, A.207, A.275, A.280, A.293, A.294, A.298
1400 **1040**	A.280, A.298
1400 **1050**	A.28, A.32, A.49, A.52, A.71, A.171
1400 **1075**	A.32
1400 **1220**	A.171, A.172, A.203, A.294, A.298
1400 **1232**	A.162, A.166, A.171, A.203, A.207, A.294, A.298
1400 **1240**	A.298
1400 **1250**	A.171
1401 **000x**	A.32, A.52, A.64, A.90, A.99, A.170, A.211
1401 **001x**	A.32, A.52, A.64, A.90, A.99, A.170, A.211
1401 **003x**	A.32, A.52, A.99, A.170
1401 **004x**	A.32, A.52, A.99, A.170
1401 **0520**	A.71, A.171, A.172, A.280, A.298
1401 **0532**	A.71, A.161, A.165, A.171, A.275, A.280, A.293, A.298
1401 **0540**	A.171, A.280, A.298
1401 **06xx**	A.11, A.13
1401 **1520**	A.29, A.30, A.32, A.49, A.50, A.52, A.63, A.64, A.96 to A.98, A.100, A.204, A.205, A.209 to A.211, A.276, A.280
1401 **1532**	A.29, A.30, A.32, A.49, A.52, A.63, A.64, A.96 to A.98, A.100, A.209 to A.211
1401 **1540**	A.29, A.32, A.49, A.52, A.280
1402 **0520**	A.267
1402 **0532**	A.265 to A.267
1402 **0540**	A.267
1402 **08xx**	A.89, A.90
1403 **0xxx**	A.89, A.90
1403 **1008**	A.52
1403 **1520**	A.209 to A.211
1404 **xxxx**	A.13
1407 **xxxx**	A.10, A.13
1409 **xxxx**	A.11, A.13
1411 **2111**	A.11 to A.13, A.71, A.161, A.165, A.169, A.171, A.201
1411 **2113**	A.90, A.161, A.165, A.170
1411 **2115**	A.165
1413 **2111**	A.11 to A.13, A.165, A.169
1413 **2113**	A.12, A.89, A.90
1413 **2114**	A.12, A.89, A.90
1413 **2115**	A.161, A.165, A.169
1413 **2311**	A.169
1413 **28xx**	A.90
1414 **2111**	A.11 to A.13, A.71, A.161, A.165, A.169, A.171, A.201
1414 **2113**	A.161, A.165, A.170
1414 **2115**	A.161, A.165, A.169
1415 **2111**	A.11, A.13, A.161, A.165, A.170, A.201
1417 **2111**	A.11, A.13, A.170
1418 **2111**	A.11, A.13, A.161, A.165, A.170, A.201
1419 **0000**	A.13
141A **xxxx**	A.11 to A.13
141B **xxxx**	A.11 to A.13
141D **2111**	A.265 to A.267, A.279, A.297
141D **2115**	A.297
141E **2111**	A.267, A.279, A.297
141E **2115**	A.297
141F **2111**	A.265 to A.267, A.279, A.297
141G **2111**	A.267, A.279, A.297
1421 **2111**	A.28, A.30, A.31, A.49, A.51, A.71, A.161, A.162, A.166, A.169, A.171, A.201, A.203, A.207
1421 **2113**	A.96, A.98, A.99, A.161, A.162, A.165, A.166, A.170
1421 **2115**	A.165
1423 **2111**	A.28, A.31, A.49, A.51, A.71, A.165, A.169
1423 **2113**	A.96, A.98, A.99
1423 **2114**	A.97, A.99
1423 **2115**	A.161, A.162, A.166, A.169
1423 **2311**	A.169
1423 **2813**	A.103
1424 **2111**	A.28, A.30, A.31, A.49, A.51, A.71, A.161, A.162, A.165, A.166, A.169, A.171, A.201, A.203, A.207
1424 **2113**	A.161, A.162, A.165, A.166, A.170
1424 **2115**	A.161, A.162, A.165, A.166, A.169
1425 **2111**	A.50, A.51, A.161, A.162, A.165, A.166, A.170, A.201, A.203, A.207
1427 **2111**	A.50, A.170
1428 **2111**	A.50, A.51, A.161, A.162, A.165, A.166, A.170, A.201, A.203, A.207
1429 **0000**	A.172
1429 **7xxx**	A.170
142D **2111**	A.279, A.297
142D **2115**	A.297

This document is not a contract. SOCOMEC reserves the right to modify features without prior notice in view of continued improvement. 2008 - 2009

REFERENCES	PAGES
142E **2111**	A.279, A.297
142E **2115**	A.297
142F **xxxx**	A.279, A.297
142G **xxxx**	A.279, A.297
1431 **3411**	A.204, A.205
1431 **3511**	A.63, A.64, A.209 to A.211
1432 **3411**	A.204, A.205
1432 **3511**	A.63, A.64, A.209 to A.211
1433 **3111**	A.30, A.31, A.162, A.166, A.169, A.203, A.207
1433 **3113**	A.98, A.99
1433 **3311**	A.169
1434 **3111**	A.30, A.31, A.162, A.166, A.169, A.203, A.207
1435 **3411**	A.204, A.205
1436 **xxxx**	A.209 to A.211
1437 **3111**	A.50, A.51, A.162, A.166, A.170, A.203, A.207
1437 **7911**	A.169, A.206
1438 **3111**	A.50, A.51, A.162, A.166, A.170, A.203, A.207
143D **3111**	A.279, A.297
143D **7111**	A.279
143E **3111**	A.279, A.297
143E **7111**	A.279
143F **xxxx**	A.297
143G **xxxx**	A.297
1443 **3111**	A.29, A.31, A.49, A.51, A.162, A.166, A.169, A.207
1443 **3113**	A.96, A.99
1443 **3114**	A.97, A.99
1443 **3311**	A.169
1444 **3111**	A.29, A.31, A.49, A.51, A.166, A.169, A.207
147x **xxxx**	A.10, A.12

REFERENCES	PAGES
148x **xxxx**	A.10, A.12
1491 **0111**	A.11, A.13
1493 **0000**	A.31, A.52, A.90, A.99, A.170
1494 **xxxx**	A.11, A.13
1499 **7701**	A.36, A.56, A.67, A.103, A.179, A.215
1499 **7702**	A.36, A.56, A.103, A.179, A.215
1499 **7703**	A.36, A.56, A.179
149A **xxxx**	A.11, A.13
149B **xxxx**	A.11, A.13
1509 **0xxx**	A.123, A.124, A.130
1509 **1xxx**	A.123, A.124, A.130
1509 **30xx**	A.30, A.34, A.96 to A.98, A.102, A.123, A.124, A.128
1509 **31xx**	A.30, A.34, A.96 to A.98, A.102, A.123, A.124, A.128
1509 **3200**	A.123, A.124, A.128
1509 **401x**	A.30, A.34, A.96 to A.98, A.102, A.123, A.124, A.128
1509 **402x**	A.30, A.34, A.96 to A.98, A.102, A.123, A.124, A.128
1509 **4063**	A.30, A.34, A.96 to A.98, A.102, A.123, A.128
1509 **4080**	A.30, A.34, A.96 to A.98, A.102, A.123, A.124, A.128
1509 **4160**	A.30, A.34, A.96 to A.98, A.102, A.123, A.128

REFERENCES	PAGES
1509 **4200**	A.123, A.124, A.128
1523 **xxxx**	A.123
1529 **xxxx**	A.123, A.130
1533 **xxxx**	A.123
1539 **xxxx**	A.123, A.124, A.130
155x **xxxx**	A.124, A.127
156x **xxxx**	A.124
157x **xxxx**	A.124
1599 **0xxx**	A.123, A.124, A.129
1599 **1002**	A.123, A.129
1599 **1006**	A.134
1599 **101x**	A.123, A.129
1599 **1022**	A.123, A.129
1599 **1025**	A.134
1599 **1032**	A.123, A.129
1599 **104x**	A.134
1599 **106x**	A.134
1599 **108x**	A.134
1599 **11xx**	A.134
1599 **2000**	A.123, A.124, A.127, A.135, A.136
1599 **2001**	A.123, A.124, A.127, A.135, A.136
1599 **2009**	A.124, A.132, A.135
1599 **201x**	A.122, A.124, A.131, A.135
1599 **202x**	A.122, A.124, A.131, A.135
1599 **3xxx**	A.147
1599 **4001**	A.122, A.123, A.132
1599 **41xx**	A.123, A.124, A.129
1599 **4200**	A.124, A.129
1599 **5xxx**	A.123, A.124, A.129
1599 **9001**	A.134
1599 **9002**	A.134
1599 **9003**	A.134 to A.136
1599 **9012**	A.134
1599 **9022**	A.135, A.136

REFERENCES	PAGES
1599 **9032**	A.135
170A **01xx**	A.260
170A **060x**	A.246, A.260
170A **061x**	A.246, A.260
170A **062x**	A.247, A.260
170A **063x**	A.247, A.260
170A **1xxx**	A.260
170A **6xxx**	A.260
170H **0069**	A.246 to A.249
170H **0235**	A.245 to A.247
170H **0236**	A.244, A.245, A.247
170H **1007**	A.244, A.245, A.260
170H **3004**	A.246, A.247, A.260
170H **3006**	A.246 to A.249, A.260
170L **xxxx**	A.243
170M **0xxx**	A.244
170M **1xxx**	A.244
170M **2xxx**	A.245
170M **31xx**	A.246
170M **323x**	A.248
170M **324x**	A.248
170M **325x**	A.246
170M **326x**	A.246
170M **327x**	A.246
170M **335x**	A.246
170M **336x**	A.246
170M **337x**	A.246
170M **338x**	A.248
170M **339x**	A.248
170M **343x**	A.248
170M **344x**	A.248
170M **345x**	A.246
170M **346x**	A.246
170M **347x**	A.246
170M **38xx**	A.246
170M **41xx**	A.246
170M **423x**	A.248
170M **424x**	A.248
170M **425x**	A.246
170M **426x**	A.246
170M **435x**	A.246
170M **436x**	A.246
170M **438x**	A.248

REFERENCES	PAGES
170M **439x**	A.248
170M **443x**	A.248
170M **444x**	A.248
170M **445x**	A.246
170M **446x**	A.246
170M **51xx**	A.247
170M **523x**	A.249
170M **524x**	A.249
170M **5250**	A.249, A.253, A.259, A.269, A.275 to A.278, A.281, A.293 to A.296, A.299, B.16, B.73, B.75, B.77, B.79, B.81, C.12, C.33, C.35, C.39, C.68, C.69
170M **5258**	A.247
170M **5259**	A.247
170M **526x**	A.247
170M **535x**	A.247
170M **536x**	A.247
170M **538x**	A.249
170M **539x**	A.249
170M **543x**	A.249
170M **544x**	A.249
170M **545x**	A.247
170M **546x**	A.247
170M **58xx**	A.247
170M **61xx**	A.247
170M **623x**	A.249
170M **624x**	A.249
170M **6250**	A.249
170M **6251**	A.249
170M **6258**	A.247
170M **6259**	A.247
170M **626x**	A.247
170M **627x**	A.247
170M **633x**	A.249
170M **634x**	A.249
170M **635x**	A.247
170M **636x**	A.247
170M **64xx**	A.247
170M **65xx**	A.249
170M **68xx**	A.247
170M **7xxx**	A.245
170N **xxxx**	A.243

REFERENCES	PAGES
172x **xxxx**	A.134
176x **xxxx**	A.135
177x **xxxx**	A.136
18xx **xxxx**	A.133
191x **xxxx**	A.79
192J **8015**	B.10, B.33, B.43
192J **802x**	B.10
192J **803x**	B.10
192J **8100**	B.8
192T **0002**	B.13, B.14
192T **0003**	B.14
192T **0005**	B.13, B.14
192T **0006**	B.13
192T **0007**	B.13, B.14
192T **0101**	B.13
192T **0102**	B.15, B.16
192T **0103**	B.13, B.14
192T **0105**	B.13, B.14
192T **0106**	B.15
192T **05xx**	B.13
192T **06xx**	B.13
192T **08xx**	B.16
192T **09xx**	B.16
192T **1xxx**	B.17
192T **20xx**	B.13
192T **21xx**	B.14
192T **23xx**	B.14
192T **24xx**	B.14
192T **3xxx**	B.14
192T **40xx**	B.14
192T **46xx**	B.17
192T **47xx**	B.17
192T **48xx**	B.17
192T **5xxx**	B.15
192T **6xxx**	B.15
192T **7xxx**	B.16
192T **80xx**	B.16
192T **81xx**	B.15
192T **93xx**	B.16
192T **95xx**	B.15
192T **96xx**	B.15
192T **97xx**	B.16
192Y **0015**	B.13, B.14
192Y **0025**	B.13
192Y **0035**	B.14

REFERENCES	PAGES
192Y **0045**	B.15
192Y **0115**	B.13, B.14
192Y **0125**	B.13
192Y **0135**	B.14
192Y **0145**	B.15
192Y **0155**	B.13, B.14
192Y **0165**	B.13
192Y **0175**	B.14
192Y **0185**	B.15
192Y **0215**	B.13, B.14
192Y **0225**	B.13
192Y **0235**	B.14
192Y **0245**	B.15
192Y **0255**	B.13, B.14
192Y **0265**	B.13
192Y **0275**	B.14
192Y **0285**	B.15
2101 **xxxx**	A.265
2109 **00xx**	A.279
2109 **0U0x**	A.265, A.267
2109 **0U15**	A.267, A.297
2109 **0U16**	A.265 to A.267, A.297
2199 **0xxx**	A.265, A.269
2199 **5015**	A.265
2200 **1xxx**	A.10, A.14
2200 **300x**	A.10
2200 **3010**	A.10
2200 **3011**	A.10
2200 **3012**	A.11
2200 **3016**	A.11
2200 **31xx**	A.11
2200 **4xxx**	A.11
2200 **5xxx**	A.10, A.14
2200 **9xxx**	A.10, A.14
2205 **xxxx**	A.10
2209 **6009**	A.10, A.16
221x **xxxx**	A.18
226x **xxxx**	A.10, A.16
2294 **1xxx**	A.10, A.16
2294 **300x**	A.10, A.16
2294 **3016**	A.10, A.11, A.16
2294 **4016**	A.11, A.16, A.122, A.125
2299 **0xxx**	A.10, A.11, A.15

REFERENCES	PAGES
2299 **3xxx**	A.10, A.17
2299 **5012**	A.10, A.12
2299 **5022**	A.11, A.12
2299 **5032**	A.10, A.12
2299 **6009**	A.10, A.16
2299 **9xxx**	A.17
240x **xxxx**	A.266
2410 **xxxx**	A.266, A.268
2411 **xxxx**	A.266
2419 **0U01**	A.266, A.269
2419 **0U11**	A.266, A.267
2420 **1xxx**	A.266, A.268
2420 **3xxx**	A.266
2420 **5xxx**	A.266, A.268
2420 **9xxx**	A.266, A.268
2429 **0U01**	A.266, A.269
2499 **1U12**	A.267
2499 **1U20**	A.265 to A.267
2499 **1U30**	A.267
25DC **4004**	A.71
2600 **301x**	A.28
2600 **302x**	A.28
2600 **303x**	A.28
2600 **304x**	A.28
2600 **305x**	A.28
2600 **306x**	A.28
2600 **308x**	A.29
2600 **309x**	A.29
2600 **31xx**	A.29
2600 **32xx**	A.29
2600 **33xx**	A.29
2600 **34xx**	A.29
2600 **401x**	A.28
2600 **402x**	A.28
2600 **403x**	A.28
2600 **404x**	A.28
2600 **405x**	A.28
2600 **406x**	A.28
2600 **408x**	A.29
2600 **409x**	A.29
2600 **41xx**	A.29
2600 **42xx**	A.29
2600 **43xx**	A.29
2600 **44xx**	A.29
2601 **xxxx**	A.30

This document is not a contract. SOCOMEC reserves the right to modify features without prior notice in view of continued improvement. 2008 - 2009

REFERENCES	PAGES
2619 **1200**	A.35, A.101, A.126
262x **xxxx**	A.35, A.101
263x **xxxx**	A.35, A.101
2694 **3xxx**	A.28, A.30, A.33, A.71, A.96 to A.98, A.102, A.123, A.124, A.128
2694 **401x**	A.28, A.30, A.33, A.71, A.96 to A.98, A.102, A.123, A.124, A.128
2694 **402x**	A.28, A.30, A.33, A.71, A.96 to A.98, A.102, A.123, A.124, A.128
2694 **4051**	A.28, A.30, A.33, A.71, A.96 to A.98, A.102, A.128
2698 **301x**	A.28, A.34, A.71
2698 **302x**	A.28, A.34, A.71
2698 **305x**	A.28, A.34, A.71
2698 **308x**	A.29, A.34
2698 **31xx**	A.29, A.34
2698 **3200**	A.29, A.34, A.45
2698 **401x**	A.28, A.34, A.71
2698 **402x**	A.28, A.34, A.71
2698 **405x**	A.28, A.34, A.71
2698 **408x**	A.29, A.34
2698 **41xx**	A.29, A.34
2698 **4200**	A.29, A.34, A.45
2699 **003x**	A.28, A.29, A.33, A.45, A.71
2699 **006x**	A.30, A.33
2699 **01xx**	A.33
2699 **03xx**	A.33
2699 **1200**	A.35, A.101, A.126
2699 **3xxx**	A.33
2699 **4xxx**	A.33
2699 **5xxx**	A.28, A.31, A.71
2699 **6008**	A.36
2699 **6027**	A.36, A.45
2699 **7xxx**	A.36

REFERENCES	PAGES
2699 **90xx**	A.36
2699 **9315**	A.36, A.45
2699 **U144**	A.280
26Dx **xxxx**	A.71
26Hx **xxxx**	A.45
2700 **3003**	A.275
2700 **304x**	A.276
2700 **306x**	A.276
2700 **308x**	A.276
2700 **31xx**	A.276
2700 **4003**	A.275
2700 **404x**	A.276
2700 **406x**	A.276
2700 **408x**	A.276
2700 **41xx**	A.276
2701 **xxxx**	A.275
2705 **xxxx**	A.277
2711 **xxxx**	A.75
2713 **xxxx**	A.75
2719 **000x**	A.75, A.76
2719 **001x**	A.75, A.76
2719 **0020**	A.75
2719 **0021**	A.75
2719 **0024**	A.75, A.76
2799 **0001**	A.49, A.53, C.12
2799 **0002**	A.49, A.53, C.12
2799 **0005**	A.53
2799 **001x**	A.50, A.54
2799 **0101**	A.53
2799 **0111**	A.54
2799 **3015**	A.29, A.32, A.45, A.98, A.100
2799 **3018**	A.29, A.32, A.45, A.96, A.100
2799 **3019**	A.32, A.45, A.98, A.100
2799 **7002**	A.36, A.103
2799 **7003**	A.36, A.103
2799 **7007**	A.56
2799 **7012**	A.29 to A.31, A.45, A.49, A.51, A.96, A.98, A.99
2799 **7013**	A.29 to A.31, A.45, A.49, A.51
2799 **7052**	A.30, A.31, A.50, A.51, A.96 to A.99

REFERENCES	PAGES
2799 **7053**	A.30, A.31, A.50, A.51
2799 **706x**	A.29, A.31
2799 **7070**	A.50, A.51
2799 **713x**	A.29, A.31, A.45
2799 **7145**	A.29, A.31
2799 **7146**	A.96, A.99
2900 **xxxx**	A.49
2905 **xxxx**	A.50
291x **xxxx**	A.49, A.50
292x **xxxx**	A.49, A.50
2998 **0003**	A.56, A.63, A.209, A.210, A.214, A.67
2998 **0004**	A.56, A.63, A.67, A.209, A.210, A.214
2998 **001x**	A.36, A.71, A.102, A.128
2998 **002x**	A.36, A.71, A.102, A.128
2998 **003x**	A.36, A.71, A.102, A.128
2998 **3080**	A.55
2998 **3120**	A.55, A.63, A.66
2998 **4080**	A.55
2998 **4120**	A.55, A.63, A.66
2999 **0012**	C.12
2999 **8707**	A.36
3115 **xxxx**	A.38
3117 **xxxx**	A.180
3125 **xxxx**	A.38
3127 **xxxx**	A.180
316x **xxxx**	A.181
317x **xxxx**	A.181
3211 **xxxx**	C.8
3215 **xxxx**	C.10
3221 **xxxx**	C.8
3225 **xxxx**	C.10
324x **xxxx**	C.15
3261 **xxxx**	C.8
3265 **xxxx**	C.10
3271 **xxxx**	C.8
3275 **xxxx**	C.10
3290 **6002**	C.12
3290 **7xxx**	C.13
35xx **xxxx**	A.63

REFERENCES	PAGES
3612 **9963**	A.204, A.205
3615 **2005**	A.167, A.201
3615 **2010**	A.167
3615 **2011**	A.167, A.201
3615 **2012**	A.167
3615 **2015**	A.168, A.202
3615 **2016**	A.168, A.202
3615 **202x**	A.168, A.202
3615 **203x**	A.168, A.202
3615 **3005**	A.167, A.201
3615 **3010**	A.167
3615 **3011**	A.167, A.201
3615 **3012**	A.167
3615 **3015**	A.168, A.202
3615 **3016**	A.168, A.202
3615 **302x**	A.168, A.202
3615 **303x**	A.168, A.202
3615 **6005**	A.167, A.201
3615 **6010**	A.167
3615 **6011**	A.167, A.201
3615 **6012**	A.167
3615 **6015**	A.168, A.202
3615 **6016**	A.168, A.202
3615 **602x**	A.168, A.202
3615 **603x**	A.168, A.202
3625 **200x**	A.163
3625 **2010**	A.163
3625 **2014**	A.163
3625 **2015**	A.163
3625 **2016**	A.163
3625 **2019**	A.164
3625 **202x**	A.164
3625 **203x**	A.164
3625 **300x**	A.163
3625 **3010**	A.163
3625 **3014**	A.163
3625 **3015**	A.163
3625 **3016**	A.163
3625 **3019**	A.164
3625 **302x**	A.164
3625 **303x**	A.164
3625 **600x**	A.163
3625 **6010**	A.163
3625 **6014**	A.163
3625 **6015**	A.163

This document is not a contract. SOCOMEC reserves the right to modify features without prior notice in view of continued improvement. 2008 - 2009

REFERENCES	PAGES
3625 **6016**	A.163
3625 **6019**	A.164
3625 **602x**	A.164
3625 **603x**	A.164
3629 **4012**	A.71, A.163, A.169
3629 **4013**	A.71, A.169
3629 **7900**	A.163, A.169, A.201
3629 **7901**	A.49 to A.51, A.163, A.164, A.168, A.169, A.201, A.202, A.206
3629 **7903**	A.163, A.167, A.179
3629 **7910**	A.169, A.279, A.297
3629 **7913**	A.56, A.163, A.164, A.167, A.168, A.179
3629 **9xxx**	A.173
363x **xxxx**	A.165, A.167
364x **xxxx**	A.161, A.163
365x **xxxx**	A.210
366x **xxxx**	A.209
367x **xxxx**	A.165
3680 **300x**	A.161
3680 **308x**	A.204
3680 **31xx**	A.204
3680 **4xxx**	A.161
3680 **6xxx**	A.204
3685 **xxxx**	A.204
369x **xxxx**	C.66
36Ux **xxxx**	A.206
3710 **xxxx**	A.293
3716 **xxxx**	A.295
3729 **4012**	A.275, A.279, A.293, A.297
3729 **4013**	A.275, A.279
3729 **4014**	A.293, A.297
3729 **4532**	A.275, A.278, A.293, A.296
3729 **7541**	A.275, A.278, A.293, A.294, A.296
3729 **7542**	A.275, A.278, A.294, A.296
3729 **7900**	A.295, A.297
3729 **7901**	A.277, A.279, A.295, A.297
3729 **8xxx**	A.300
3729 **90xx**	A.300
3729 **95xx**	A.277, A.278, A.295, A.296
3729 **99xx**	A.277, A.278, A.295, A.296
3799 **6012**	A.276, A.279
3799 **8xxx**	A.300
3799 **9xxx**	A.300
379M **0512**	A.280, A.298
379M **0520**	A.280, A.293, A.298
379M **0532**	A.275, A.280, A.298
379M **0540**	A.280, A.298
3811 **2063**	A.166, A.168, A.202, A.203
3811 **208x**	A.166, A.168
3811 **21xx**	A.166, A.168
3811 **3063**	A.166, A.168, A.202, A.203
3811 **308x**	A.166, A.168
3811 **31xx**	A.166, A.168
3811 **6063**	A.166, A.168, A.202, A.203
3811 **608x**	A.166, A.168
3811 **61xx**	A.166, A.168
3821 **xxxx**	A.162, A.164
3829 **9308**	A.162, A.166, A.172
3829 **9310**	A.161, A.165, A.166, A.172
3829 **9312**	A.162, A.166, A.172
3829 **9320**	A.161, A.162, A.166, A.172
3829 **933x**	A.162, A.166, A.172
3831 **2005**	A.165, A.201
3831 **2010**	A.165
3831 **2011**	A.165, A.201
3831 **2012**	A.166
3831 **2015**	A.166, A.203
3831 **2016**	A.166, A.203
3831 **202x**	A.166, A.203
3831 **203x**	A.166, A.203
3831 **3005**	A.165, A.201
3831 **3010**	A.165
3831 **3011**	A.165, A.201
3831 **3012**	A.166
3831 **3015**	A.166, A.203
3831 **3016**	A.166, A.203
3831 **302x**	A.166, A.203
3831 **303x**	A.166, A.203
3831 **6005**	A.165, A.201
3831 **6010**	A.165
3831 **6011**	A.165, A.201
3831 **6012**	A.166
3831 **6015**	A.166, A.203
3831 **6016**	A.166, A.203
3831 **602x**	A.166, A.203
3831 **603x**	A.166, A.203
3841 **200x**	A.161
3841 **2010**	A.161
3841 **2014**	A.161
3841 **2015**	A.161
3841 **2016**	A.161
3841 **2019**	A.162
3841 **202x**	A.162
3841 **203x**	A.162
3841 **300x**	A.161
3841 **3010**	A.161
3841 **3014**	A.161
3841 **3015**	A.161
3841 **3016**	A.161
3841 **3019**	A.162
3841 **302x**	A.162
3841 **303x**	A.162
3841 **600x**	A.161
3841 **6010**	A.161
3841 **6014**	A.161
3841 **6015**	A.161
3841 **6016**	A.161
3841 **6019**	A.162
3841 **602x**	A.162
3841 **603x**	A.162
3850 **xxxx**	A.294
3859 **6011**	A.294, A.297
3860 **300x**	A.293
3860 **301x**	A.294
3860 **302x**	A.294
3860 **304x**	A.294
3860 **600x**	A.293
3860 **601x**	A.294
3860 **602x**	A.294
3860 **604x**	A.294
3870 **300x**	A.165
3870 **3010**	A.165
3870 **3011**	A.165
3870 **3012**	A.166
3870 **3015**	A.166
3870 **3016**	A.166
3870 **302x**	A.166
3870 **303x**	A.166
3870 **600x**	A.165
3870 **6010**	A.165
3870 **6011**	A.165
3870 **6012**	A.166
3870 **6015**	A.166
3870 **6016**	A.166
3870 **602x**	A.166
3870 **603x**	A.166
3880 **300x**	A.161
3880 **3010**	A.161
3880 **3014**	A.161
3880 **3015**	A.161
3880 **3016**	A.161
3880 **3019**	A.162
3880 **302x**	A.162
3880 **303x**	A.162
3880 **600x**	A.161
3880 **6010**	A.161
3880 **6014**	A.161
3880 **6015**	A.161
3880 **6016**	A.161
3880 **6019**	A.162
3880 **602x**	A.162
3880 **603x**	A.162
3890 **2xxx**	A.206, A.207
3890 **3xxx**	A.206, A.207
3890 **8xxx**	A.202, A.203
3890 **9xxx**	A.202, A.203
3894 **xxxx**	A.176

This document is not a contract. SOCOMEC reserves the right to modify features without prior notice in view of continued improvement. 2008 - 2009

REFERENCES	PAGES
3898 **2xxx**	A.164, A.166, A.168, A.177, A.206, A.207
3898 **3080**	A.164, A.166, A.168, A.177, A.206, A.207, A.294
3898 **3120**	A.164, A.166, A.168, A.177, A.206, A.207
3898 **4080**	A.164, A.166, A.168, A.177, A.294
3898 **4120**	A.164, A.166, A.168, A.177
3899 **0400**	A.172
3899 **2xxx**	A.207
3899 **3xxx**	A.207
3899 **6011**	A.164, A.168, A.169, A.202, A.206
3899 **7011**	A.164, A.168, A.169, A.206
3899 **7911**	A.164, A.168
3899 **8xxx**	A.203
3899 **9xxx**	A.203
38U1 **202x**	A.207
38U1 **203x**	A.207
38U1 **205x**	A.206, A.207
38U1 **206x**	A.206, A.207
38U1 **208x**	A.206, A.207
38U1 **21xx**	A.206, A.207
38U1 **302x**	A.207
38U1 **303x**	A.207
38U1 **305x**	A.206, A.207
38U1 **306x**	A.206, A.207
38U1 **308x**	A.206, A.207
38U1 **31xx**	A.206, A.207
3954 **6010**	A.300
3954 **602x**	A.275, A.281, A.300
3954 **606x**	A.275, A.281, A.300
3954 **6120**	A.281
3954 **8010**	A.300
3954 **802x**	A.275, A.281, A.300

REFERENCES	PAGES
3954 **806x**	A.275, A.281, A.300
3954 **8120**	A.281
3990 **1xxx**	A.212
3990 **20xx**	A.212
3990 **22xx**	A.212
3990 **2839**	A.206, A.207
3990 **30xx**	A.212
3990 **31xx**	A.212
3990 **32xx**	A.212
3990 **33xx**	A.212
3990 **3839**	A.206, A.207
3990 **4xxx**	A.212
3990 **7xxx**	A.202, A.203
3990 **801x**	A.202, A.203
3990 **802x**	A.202, A.203
3990 **803x**	A.202, A.203
3990 **8080**	A.204, A.205
3990 **901x**	A.202, A.203
3990 **902x**	A.202, A.203
3990 **903x**	A.202, A.203
3990 **9080**	A.204, A.205
3991 **xxxx**	A.65, A.212
3992 **xxxx**	A.212
3993 **xxxx**	A.65
3994 **0xxx**	A.176
3994 **13xx**	A.210, A.213
3994 **14xx**	A.210, A.213
3994 **1901**	A.176, A.258
3994 **1902**	A.213
3998 **2016**	A.161 to A.168, A.177, A.258
3998 **2025**	A.162, A.164, A.166, A.168, A.177, A.206, A.207, A.258
3998 **2080**	A.162
3998 **3016**	A.55, A.161 to A.168, A.177, A.258
3998 **3025**	A.55, A.162, A.164, A.166, A.168, A.177, A.206, A.207, A.258

REFERENCES	PAGES
3998 **304x**	A.63, A.66, A.209, A.210, A.214
3998 **306x**	A.63, A.66, A.209, A.210, A.214
3998 **3080**	A.162
3998 **3120**	A.204, A.209, A.210, A.214
3998 **4016**	A.55, A.161 to A.168, A.177, A.258
3998 **4025**	A.55, A.162, A.164, A.166, A.168, A.177, A.258
3998 **404x**	A.63, A.66, A.209, A.210, A.214
3998 **406x**	A.63, A.66, A.209, A.210, A.214
3998 **4080**	A.162
3998 **4120**	A.204, A.209, A.210, A.214
3999 **0001**	A.163, A.167, A.175
3999 **0002**	A.163, A.167, A.175
3999 **0003**	A.175
3999 **0021**	A.49, A.50, A.53, A.54, A.163, A.164, A.167, A.168, A.175, A.201, A.202, A.206
3999 **0022**	A.49, A.50, A.53, A.54, A.163, A.164, A.167, A.168, A.175, A.201, A.202
3999 **0031**	A.63, A.66, A.209, A.210, A.213
3999 **0040**	A.175
3999 **0041**	A.54

REFERENCES	PAGES
3999 **0042**	A.54
3999 **0043**	A.54
3999 **0044**	A.54
3999 **005x**	A.63, A.66, A.204, A.209, A.210, A.213
3999 **0103**	A.175
3999 **011x**	A.66, A.213
3999 **014x**	A.175
3999 **02xx**	A.175
3999 **0600**	A.161, A.162, A.165, A.166, A.174
3999 **070x**	A.11, A.15, A.49, A.50, A.53, A.54, A.71, A.164, A.168, A.174, A.201 to A.203, A.206, A.207, A.275, A.280, A.293, A.294, A.299
3999 **0710**	A.161, A.165, A.174
3999 **2839**	A.207
3999 **31xx**	A.66, A.212
3999 **32xx**	A.66, A.212
3999 **34xx**	A.66, A.212
3999 **3839**	A.207
3999 **4110**	A.66, A.212
3999 **6012**	A.204, A.205, A.209 to A.211
3999 **6013**	A.211
3999 **6107**	A.67
3999 **6201**	A.209 to A.211
3999 **6203**	A.63, A.64
3999 **7007**	A.67
3999 **801x**	A.203
3999 **802x**	A.203
3999 **803x**	A.203
3999 **8080**	A.205
3999 **8104**	A.67, A.215
3999 **82xx**	A.168, A.177
3999 **83xx**	A.168, A.177
3999 **84xx**	A.168, A.177
3999 **8906**	A.167, A.177

This document is not a contract. SOCOMEC reserves the right to modify features without prior notice in view of continued improvement. 2008 - 2009

REFERENCES	PAGES
3999 **8912**	A.167, A.168, A.177
3999 **901x**	A.203
3999 **902x**	A.203
3999 **903x**	A.203
3999 **9080**	A.205
3999 **U041**	A.275, A.277, A.280, A.293 to A.295, A.298
3999 **U042**	A.275, A.280, A.293 to A.295, A.298
3Vxx **xxxx**	C.14
4100 **3xxx**	A.96
4100 **4xxx**	A.96
4100 **7xxx**	A.98
4100 **9xxx**	A.98
4109 **0019**	A.123, A.124, A.126
4109 **0021**	A.96 to A.98, A.102
4109 **003x**	A.124, A.126
4109 **006x**	A.124, A.126
4109 **008x**	A.123, A.124, A.126
4109 **01xx**	A.123, A.124, A.126
4109 **02xx**	A.101
4109 **03xx**	A.101
4109 **1xxx**	A.103
4109 **2xxx**	A.103
4109 **3xxx**	A.96 to A.98, A.100
4109 **4xxx**	A.96 to A.98, A.100
4109 **8507**	A.36
4116 **xxxx**	A.104
4119 **xxxx**	A.105
4190 **xxxx**	A.97
4199 **5012**	A.30, A.31, A.96 to A.99
4199 **7146**	A.98, A.99
4212 **xxxx**	A.104
4215 **xxxx**	A.106
4220 **3002**	A.83
4220 **3004**	A.83
4220 **3006**	A.83

REFERENCES	PAGES
4220 **3008**	A.84
4220 **301x**	A.84
4220 **4002**	A.83
4220 **4004**	A.83
4220 **4006**	A.83
4220 **4008**	A.84
4220 **401x**	A.84
4221 **3C02**	A.83, A.85
4221 **3C04**	A.83, A.85
4221 **3C06**	A.83, A.85
4221 **3C08**	A.84, A.85
4221 **4C02**	A.83, A.85
4221 **4C04**	A.83, A.85
4221 **4C06**	A.83, A.85
4221 **4C08**	A.84, A.85
4230 **3002**	A.83
4230 **3004**	A.83
4230 **3006**	A.83
4230 **3008**	A.84
4230 **301x**	A.84
4230 **4002**	A.83
4230 **4004**	A.83
4230 **4006**	A.83
4230 **4008**	A.84
4230 **401x**	A.84
4231 **3C02**	A.83, A.85
4231 **3C04**	A.83, A.85
4231 **3C06**	A.83, A.85
4231 **3C08**	A.84, A.85
4231 **4C02**	A.83, A.85
4231 **4C04**	A.83, A.85
4231 **4C06**	A.83, A.85
4231 **4C08**	A.84, A.85
4240 **3002**	A.83
4240 **3004**	A.83
4240 **3006**	A.83
4240 **3008**	A.84
4240 **301x**	A.84
4240 **4002**	A.83
4240 **4004**	A.83
4240 **4006**	A.83
4240 **4008**	A.84
4240 **401x**	A.84
4241 **3C02**	A.83, A.85
4241 **3C04**	A.83, A.85
4241 **3C06**	A.83, A.85

REFERENCES	PAGES
4241 **3C08**	A.84, A.85
4241 **4C02**	A.83, A.85
4241 **4C04**	A.83, A.85
4241 **4C06**	A.83, A.85
4241 **4C08**	A.84, A.85
4250 **3002**	A.83
4250 **3004**	A.83
4250 **3006**	A.83
4250 **3008**	A.84
4250 **301x**	A.84
4250 **4002**	A.83
4250 **4004**	A.83
4250 **4006**	A.83
4250 **4008**	A.84
4250 **401x**	A.84
4259 **1xxx**	A.83, A.84
4259 **2xxx**	A.83, A.84
4259 **3xxx**	A.83, A.84
4259 **4xxx**	A.83, A.84
4259 **5042**	A.83, A.85
4259 **900x**	A.83 to A.85
4259 **9040**	A.83, A.85
4259 **9080**	A.83 to A.85
4299 **5001**	A.83, A.85
4299 **5002**	A.83 to A.85
440x **xxxx**	C.13
441x **xxxx**	A.91
4430 **xxxx**	A.89
4439 **0001**	A.89, A.91
4439 **5012**	A.89, A.90
4440 **xxxx**	A.89
4449 **5012**	A.89, A.90
449x **xxxx**	A.89, A.91
4500 **xxxx**	C.69
4501 **xxxx**	C.68
4502 **xxxx**	C.69
451x **xxxx**	C.33
47xx **xxxx**	B.83
4800 **xxxx**	C.21
4805 **0000**	B.65
4805 **0001**	B.65
4805 **0002**	B.69
4806 **0000**	B.63
481x **xxxx**	B.47
4825 **0080**	B.51
4825 **0082**	B.51

REFERENCES	PAGES
4825 **0088**	B.51, B.56
4825 **0089**	B.51, B.56
4825 **009x**	B.56
4825 **0A20**	B.51
4825 **0A4x**	B.56
4825 **1xxx**	B.56
4850 **0201**	B.39
4850 **1xxx**	B.37
4850 **2xxx**	B.33
4850 **AM10**	B.27
4851 **0xxx**	B.31
4851 **1000**	B.29
4852 **0000**	B.43
4899 **01xx**	B.60
4899 **02xx**	B.61
4899 **03xx**	B.61
493x **xxxx**	B.83
4942 **0000**	B.79
5000 **0038**	C.39, C.41, C.44
5000 **004x**	A.17
5000 **005x**	A.17
5020 **xxxx**	C.39, C.41, C.44
5021 **xxxx**	C.56
5022 **0xxx**	C.56
5022 **5110**	C.49
5023 **01xx**	C.56
5023 **03xx**	C.51
5023 **04xx**	C.51
5023 **6110**	C.49
5024 **1xxx**	C.39
5024 **2xxx**	C.39
5024 **3xxx**	C.41
5024 **4500**	C.39
5024 **5xxx**	C.44
5024 **6xxx**	C.39
5024 **7xxx**	C.41
5024 **8xxx**	C.41
5024 **9031**	C.39
5024 **9032**	C.41
5024 **9033**	C.44
5024 **9034**	C.39
5024 **9041**	C.39
5024 **9042**	C.41
5024 **9044**	C.39
5025 **5100**	C.46, C.47
5025 **511x**	C.46

This document is not a contract. SOCOMEC reserves the right to modify features without prior notice in view of continued improvement. 2008 - 2009

REFERENCES	PAGES
5025 **512x**	C.46, C.47
5025 **513x**	C.46, C.47
5025 **52xx**	C.47
5026 **0450**	C.59
5026 **0460**	C.58
5027 **xxxx**	C.50
5028 **0410**	C.57
5028 **0411**	C.57, C.67
5028 **0412**	C.57, C.67
5028 **0413**	C.57, C.67
5028 **0415**	C.57, C.67
5028 **042x**	C.67
5028 **045x**	C.67
5028 **047x**	C.67
5031 **xxxx**	C.53
5032 **xxxx**	C.54
5036 **xxxx**	C.54
5037 **xxxx**	C.54
5400 **3016**	A.35, A.55, A.163, A.164, A.167, A.168, A.178
5400 **302x**	A.35, A.55, A.67, A.164, A.168, A.178, A.214
5400 **304x**	A.35, A.55, A.67, A.164, A.168, A.178, A.214
5400 **3063**	A.35, A.55, A.67, A.214
5400 **4016**	A.35, A.55, A.163, A.164, A.167, A.168, A.178
5400 **402x**	A.35, A.55, A.67, A.164, A.168, A.178, A.214
5400 **404x**	A.35, A.55, A.67, A.164, A.168, A.178, A.214
5400 **4063**	A.35, A.55, A.67, A.214
5410 **0xxx**	C.63
5410 **1xxx**	C.63
5410 **3xxx**	C.64
5410 **4xxx**	C.64

REFERENCES	PAGES
5411 **xxxx**	A.34, C.65
5412 **xxxx**	C.65
5413 **xxxx**	C.66
5414 **xxxx**	C.64
5420 **2426**	C.63
5420 **4xxx**	A.34, C.64
5421 **xxxx**	C.63
5601 **xxxx**	A.253
5602 **5xxx**	A.253
5602 **9xxx**	A.254
5603 **5xxx**	A.253
5603 **9xxx**	A.254
5Axx **xxxx**	A.228
5Fxx **xxxx**	A.228
6012 **xxxx**	A.233
6013 **xxxx**	A.233
6019 **0000**	A.233, A.236
6022 **xxxx**	A.233
6023 **xxxx**	A.233
6029 **0000**	A.173, A.233, A.236
6032 **xxxx**	A.233
6033 **xxxx**	A.233
6039 **0000**	A.173, A.233, A.236
605x **xxxx**	A.233
606x **xxxx**	A.233
63xx **xxxx**	A.258
6401 **0011**	A.236
642x **xxxx**	A.173, A.234 to A.236
643x **xxxx**	A.259
6441 **0005**	A.173, A.234 to A.236
6500 **000x**	A.257
6500 **001x**	A.257
6500 **002x**	A.257
6500 **003x**	A.257
6500 **004x**	A.258
6500 **1010**	A.244, A.257
6500 **11xx**	A.257
6501 **1010**	A.245, A.257, A.258
6501 **1011**	A.246, A.257, A.258
6501 **1012**	A.247, A.257, A.258

REFERENCES	PAGES
6501 **1013**	A.247, A.257, A.258
6501 **103x**	A.257
6501 **111x**	A.257, A.258
6501 **113x**	A.257
651x **xxxx**	A.257
6600 **xxxx**	A.234
6601 **xxxx**	A.235
6692 **xxxx**	A.234
6693 **xxxx**	A.235
6702 **xxxx**	A.234
6703 **xxxx**	A.235
6712 **xxxx**	A.234
6713 **xxxx**	A.235
6722 **xxxx**	A.234
6723 **xxxx**	A.235
6732 **xxxx**	A.234
6733 **xxxx**	A.235
6746 **xxxx**	A.234
6747 **xxxx**	A.235
6852 **xxxx**	A.234
6853 **xxxx**	A.235
6862 **xxxx**	A.234
6863 **xxxx**	A.235
6872 **xxxx**	A.234
6873 **xxxx**	A.235
6882 **xxxx**	A.234
6883 **xxxx**	A.235
6896 **xxxx**	A.234
6897 **xxxx**	A.235
6A10 **xxxx**	A.225
6A1M **xxxx**	A.227
6A20 **xxxx**	A.225
6A2M **xxxx**	A.227
6A30 **xxxx**	A.225
6A3M **xxxx**	A.227
6A40 **xxxx**	A.225
6A4M **xxxx**	A.227
6B10 **000x**	A.225
6B10 **001x**	A.225
6B10 **002x**	A.225
6B10 **003x**	A.225
6B10 **004x**	A.225
6B10 **005x**	A.225

REFERENCES	PAGES
6B10 **006x**	A.225
6B10 **008x**	A.226
6B10 **01xx**	A.226
6B1M **xxxx**	A.227
6B20 **xxxx**	A.226
6B2M **xxxx**	A.227
6B30 **xxxx**	A.226
6B3M **0400**	A.227
6B40 **xxxx**	A.226
6B4M **0500**	A.227
6C10 **xxxx**	A.226
6C1M **0500**	A.227
6C2x **xxxx**	A.226
6C3x **xxxx**	A.226
6CCx **xxxx**	A.309
6Dxx **xxxx**	A.226
6F10 **xxxx**	A.225
6F1M **xxxx**	A.227
6F20 **xxxx**	A.225
6F2M **xxxx**	A.227
6Jxx **xxxx**	A.309
6Lxx **xxxx**	A.309
73xx **xxxx**	A.259
7769 **9999**	A.178, A.215
8051 **xxxx**	A.313
8052 **xxxx**	A.313
8053 **xxxx**	A.313
8056 **xxxx**	A.313
8057 **xxxx**	A.312
8060 **0004**	A.313
8061 **xxxx**	A.312
Nxxx **xxxx**	C.67

This document is not a contract. SOCOMEC reserves the right to modify features without prior notice in view of continued improvement. 2008 - 2009

SWITCHING

To control, exploit and guarantee the safety of an installation

DISCONNECTING, BREAKING, CONTROLLING, SWITCHING & PROTECTING LOW VOLTAGE CIRCUITS: these are the principal functions of the products in the "Switching" field. These are products that can be integrated at every level of an electrical installation to contribute to its optimum operation and to the safety measures of people and equipment.

SOCOMEC, specialists in LV switching components, provide the widest and the most complete range on the market (BS, DIN, UL/CSA, NFC…). A very wide range of accessories and numerous customised possibilities also contribute to facilitating the installation and operation of the devices.

To guarantee the safety of people working on electrical equipment, fully visualised breaking is used for disconnection purposes. This function is required between each energy generating source and the worker.

Able to cope with functional on-load breaking without affecting performance, SOCOMEC switch disconnectors, load break switches, changeover switches and fuse combination switches meet the needs of all utilisation categories relating to the occasional breaking of inductive circuits or to the direct of motors control.

SOCOMEC changeover solutions provide totally safe single-operation power switching, covering all current needs from 25 to 3200 A.

Combined with a breaking function, overcurrent protection is provided with absolute safety by SOCOMEC's range of fuse combination switches, manual or tripping (the most complete on the market). The fuse switch solution offers, amongst other things, essential advantages in conventional distribution or motor protection applications.

The operational safety provided by fuses is justified in the industrial and the large-scale building services sectors by numerous additional advantages: ease of use in general distribution and motor protection, protection against short-circuits up to more than 100 kA at 400 V AC, ease of selectivity (total at K < 1.6) whoever the manufacturer, no aging problems and no maintenance required.

Load break switches
[A.4 - A.79]

Changeover switches
[A.80 - A.151]

SWITCHING

Fuse combination switches
[A.152 - A.221]

Fuse protection
[A.222 - A.261]

UL / CSA range
[A.262 - A.309]

Public power distribution
[A.310 - A.315]

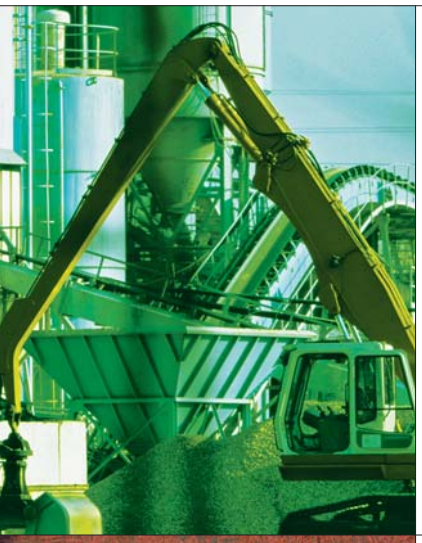

Load break switches
SIRCO M and MV [A.8]
For all cut-out and switchgear functions in LV networks and machine control circuits from 16 to 160 A.
A new technological concept allowing the function of a switch disconnector to be combined with that of a changeover switch, all wrapped up in a highly innovative, modular design.

Changeover switches
ATyS M [A.120]
A world reference in the field of power source switchgear, SOCOMEC is once again at the forefront of innovation by creating a new automatic changeover concept dedicated to applications with an intensity of up to 160 A.

Fuse combination switches
FUSERBLOC [A.158]
For breaking and fuse protection of LV installations from 20 to 1250 A. The new range of FUSERBLOC fuse switches, featuring a new mechanism, allows the handle to be mounted at the front, at the back, on the sides or between the poles, this covering all installation configurations.
With integrated auxiliary contact holder and TEST position.

This document is not a contract. SOCOMEC reserves the right to modify features without prior notice in view of continued improvement. 2008 - 2009

SELECTION GUIDE

LOAD BREAK SWITCHES

APPLICATIONS	NEW SIRCO M 16 to 125 A	NEW SIRCO MV 100 to 160 A	SIRCO 125 to 4000 A
Section incomers	●	●	●
Section feeders	●	●	●
Emergency breaking	●	●	●
Generator set output	●	●	
Network coupling	●	●	●
Local safety breaking	●	●	●
Machine control	●	●	
Enclosed switches	●	●	●
Changeover between two supplies	● (1)		
Switching between two loads	● (1)		
CHARACTERISTICS			
OPERATION			
Manual	•	•	•
Tripping			
DIRECT HANDLE			
Front	•	•	•
Side	•	•	•
Door mounted	•	•	
DOOR INTERLOCKED EXTERNAL HANDLE			
Front	•	•	•
Right-hand side	•	•	•
Left-hand side	•	•	• (2)
BREAKING			
Fully visible	•	•	•
Visible		•	
SWITCH BODY			
Modular	•	•	
PAGES	see page A.8	see page A.8	see page A.26

*(1) **SIRCOVER M** is composed of two 3 pole **SIRCO M** switches, conversion kit and a fourth pole module, on request.*
(2) Please consult us.

This document is not a contract. SOCOMEC reserves the right to modify features without prior notice in view of continued improvement. 2008 - 2009

As well as the rating of the protective device, the selection is conditioned by:
- the conditions of use (number of operations, general level of installation, terminal level, receiver type),
- the safety specifications relating to visible breaking,
- the control functionalities (manual, automatic…),
- the type of installation in the enclosure (on a door, with a modular escutcheon, at the back of a cabinet…).

We remain at your disposal to study together any adaptation to specific requirements which cannot be covered by this standard offer. Do not hesitate to consult us.

	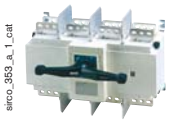				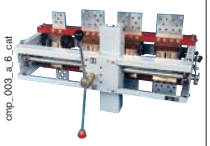	
	SIRCO HW 2000 to 3200 A	**SIDER 125 to 1600 A**	**SIDERMAT 250 to 1800 A**	**SIRCO DC 40 to 315 A**	**CMP 2500 to 5000 A**	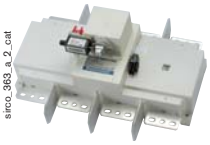 **SIRCO for earthing**
	●	●	●	●	●	
	●	●	●	●	●	
	●	●	●	●	●	
			●			
	●	●		●	●	**SIRCO motorised load break switches**
	●	●	●	●		
				●		
	•	•	•	•	•	**SIRCO range with over rated neutral**
			•		•	
	•	•	•	•	•	
		•	•	•		
	•	•	•	•	•	**Multipolar switches**
		•	•	•		
	•	•	•	•	•	
		•	•		•	
	see page A.44	see page A.48	see page A.62	see page A.70	see page A.74	see page A.78

This document is not a contract. SOCOMEC reserves the right to modify features without prior notice in view of continued improvement. 2008 - 2009

The SIRCO M & MV range

NEW

An innovative technology

Description

The new **SIRCO M** & **MV** are load break switches that combine attractive style and optimised features due to their innovative design.
This range, dedicated to industrial applications, provides simple solutions for emergency or local switching and machine control.

SOCOMEC innovates with this new system that proposes with the same product a direct front operation, a right side operation or a left side operation.

By taking 3 pole switch and adding some standard accessories, it is easy to achieve a 6/8 pole **SIRCO M** load break switch or a 3/4 pole **SIRCOVER M** changeover switch. It is also possible to add a solid neutral or earth pole and auxiliary contacts.

SIRCO M

The **SIRCO M** switches are fully visualised breaking devices with contact point technology.
The design of the mechanism enables the operation of the device in every orientation without derating.

Direct operation
A direct handle to suit all markets:
- rotary handle,
- lever operation (toggle).

sircm_028_a_1_x_cat

sircm_029_c_2_x_cat

External operation

sircm_030_a_1_x_cat

Compact and robust, the new “S” type rotary handle enables the same switch to be operated either with a front, left side or right side external handle.

Main accessories

Door / Panel mounting kit

sircm_135_a

This kit enables a direct mounting of the switch on the door panel, on the right or left side of the panel.
Moreover, the connection clamps of the switch are always accessible.
The external handle is quick and easy to install due to an internal locking nut mounted on the inside of the enclosure.

Conversion kit

sircm_062_a_1_x_cat

This accessory enables the assembly of two 3 pole switches + additional poles in order to achieve:
- 6 or 8 pole **SIRCO M** load break switches,
- 3 or 4 pole **SIRCOVER M** changeover switches.

The **SIRCOVER M** changeover switches ensure switching, transfer of sources (I - 0 - II) or transfer of two low voltage circuits on load (I - I+II - II), with the continuity of power supply.

Compact enclosure

sircm_005_a_2_x_cat

The **enclosures equipped with SIRCO M** ensure emergency breaking, local breaking for mechanical maintenance and safety isolation for any low voltage circuit:
- polycarbonate housing,
- IP65.

For more information, please consult us.

Additional poles

sircm_046_b_1_x_cat

3 additional pole versions are available:
- a switched fourth pole module,
- an unswitched neutral pole,
- a protective earth module (unswitched pole).

The additional poles can be mounted directly on either the left or right side of the switch according to your requirements.

This document is not a contract. SOCOMEC reserves the right to modify features without prior notice in view of continued improvement. 2008 - 2009

Main accessories (continued)

Additional poles configurations

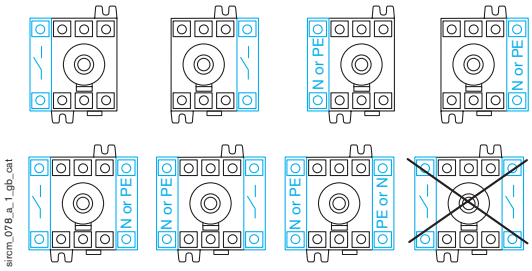

sircm_078_a_1_gb_cat

M type auxiliary contacts with a pre-breaking and signalisation function

NO + NC

sircm_080_a_1_x_cat

2 NO

sircm_079_a_1_x_cat

These auxiliary contacts with a pre-breaking and signalisation function are available in NO + NC or 2 NO version and can be mounted on the left or on the right side of the device.

Max 4 auxiliary contacts (2 modules).

Pre-break is not guaranteed on the **SIRCO MV**.

U type auxiliary contacts with a pre-breaking and signalisation function (SIRCO MV only)

sircm_048_a_1_x_cat

These auxiliary contacts with a pre-breaking and signalisation function are available in NO or NC version and can be mounted on the device.

Max 2 auxiliary contacts.

Auxiliary contacts configurations

SIRCO M and SIRCOVER M

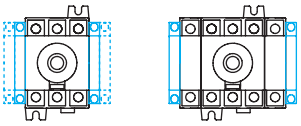

sircm_081_a_1_cat

SIRCO MV

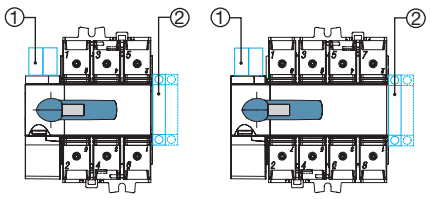

sircm_098_a_1_cat

1. Max. 2 "U" type auxiliary contacts.
2. Max. 4 "M" type auxiliary contacts.

Main accessories (continued)

Auxiliary contacts

SIRCO M		SIRCO MV		
Pre-breaking and signalisation function		Signalisation function		Pre-breaking function
M type		M type		U type
2 NO	NO + NC	2 NO	NO + NC	NC or NO

sircm_089_b_1_gb_cat

SIRCO MV

The **SIRCO MV** are load break switches that combines attractive shape and optimised features thanks to their innovative design.

It offers, in addition to the fully visualised breaking, it also provides visible double breaking based on contact carriers equipped with sliding contacts.

Direct operation

sircm_088_b_2_x_cat

External front or left side operation

sircm_033_a_1_x_cat

External right side operation

sircm_034_a_1_x_cat

This document is not a contract. SOCOMEC reserves the right to modify features without prior notice in view of continued improvement. 2008 - 2009

SIRCO M & MV
16 to 160 A

Functions
References
Accessories
Characteristics
Dimensions

SIRCO M - Toggle operation

sircm_133_a

SIRCO M - Direct operation with handle

sircm_132_a

SIRCO MV

sircm_099_a

Functions

SIRCO M and **MV** are manually operated modulable and modular multipolar load break switches.

On and off load switches providing safety isolation for any low voltage circuit, particularly for machine control circuits.

SIRCOVER M is composed of two 3 pole **SIRCO M** switches and conversion kit.

SIRCOVER M are manually operated multipolar changeover switches. They ensure switching, transfer of sources or transfer of two low voltage circuits on load as well as their safety disconnection.

Conformity to standards

- IEC 60947-3
- EN 60947-3

General characteristics

- Double break per phase.
- DIN rail mounting, panel or modular panel with 45 mm front cut out.
- IP20 device and accessories.

Specific characteristics

SIRCO M - SIRCOVER M

- Fully visualised breaking.
- Contact point technology.
- For panel mounting device, use the “Door mounting kit” (see accessories).

SIRCO MV

- Visible double breaking.
- Fully visualised breaking.

This document is not a contract. SOCOMEC reserves the right to modify features without prior notice in view of continued improvement. 2008 - 2009

Illustrations

SIRCO M

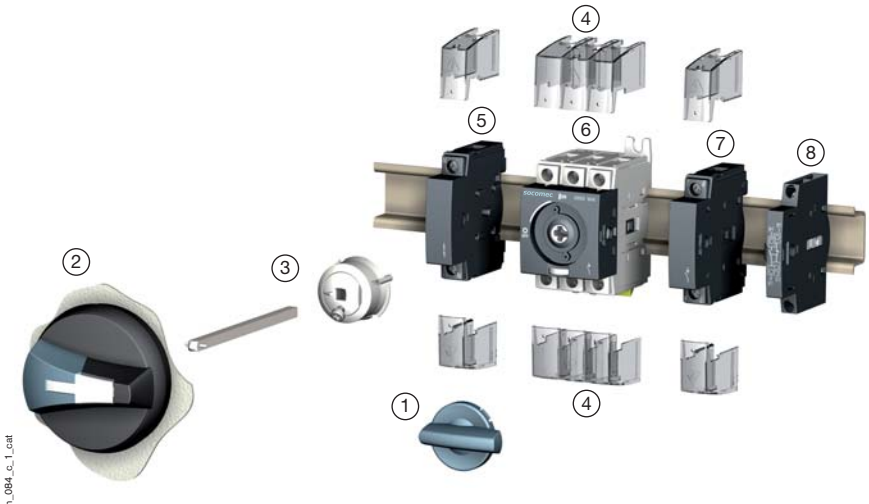

sircm_084_c_1_cat

Overview (for further details, please see the installation instructions supplied with each device)

1. Direct handle.
2. Door interlocked external handle.
3. Shaft extension.
4. Terminal shrouds.
5. Unswitched neutral pole.
6. Switch body.
7. Switched fourth pole module.
8. M type auxiliary contacts.

SIRCO MV

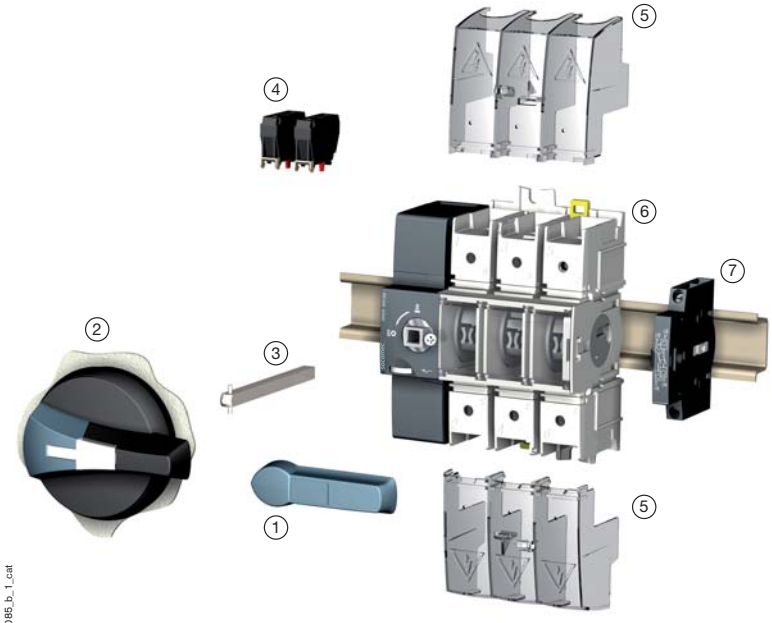

sircm_085_b_1_cat

1. Direct handle.
2. Door interlocked external handle.
3. Shaft extension.
4. U type auxiliary contacts.
5. Terminal shrouds.
6. Switch body.
7. M type auxiliary contacts.

This document is not a contract. SOCOMEC reserves the right to modify features without prior notice in view of continued improvement. 2008 - 2009

SIRCO M & MV
16 to 160 A

References

SIRCO M

Rating (A)	Complete switch body toggle operation 3 P	Direct and external operation switch body 3 P(1)	Direct handle	Door interlocked external front and right side handle (4)	Door interlocked external left side handle(4)	Door interlocked external front handle for **SIRCOVER M** changeover switches(4)	Shaft extensions for external front and side handle(4)
16	2205 **3000**	2200 **3000**(2)(3)	Blue 2299 **5012**	***S00-type*** ***I - 0*** Black IP55 1471 **1111**(5) Black IP65 1473 **1111**(5) Red/Yellow IP65 1474 **1111**(5)	***S00-type*** ***I - 0*** Black IP65 147A **5111** Red/Yellow IP65 147B **5111**	***S00-type*** ***I - 0 - II*** Black IP65 1473 **1113**(5) ***I - I+II - II*** Black IP65 1473 **1114**(5)	150 mm 1407 **0515** 200 mm 1407 **0520** 320 mm 1407 **0532**
20	2205 **3001**	2200 **3001**(2)(3)					
25	2205 **3002**	2200 **3002**(2)(3)					
32	2205 **3003**	2200 **3003**(2)(3)					
40	2205 **3004**	2200 **3004**(2)(3)					
63	2205 **3006**	2200 **3006**(2)(3)					
80	2205 **3008**	2200 **3008**(2)(3)					
100 *	-	2200 **3010**	Blue 2299 **5032**	***S0-type*** ***I - 0*** Black IP55 1481 **1111**(5) Black IP65 1483 **1111**(5) Red/Yellow IP65 1484 **1111**(5)	***S0-type*** ***I - 0*** Black IP65 148A **5111** Red/Yellow IP65 148B **5111**	-	
125 *	-	2200 **3011**					

SIRCOVER M is composed of two 3 pole SIRCO M switches and conversion kit (for external operation, add the shaft + the handle).

+ ADDITIONAL ACCESSORIES

Rating (A)	Switched fourth pole module	Unswitched neutral pole	Protective earth module	Auxiliary contacts	Terminal shrouds	Conversion kit	Door mounting kit
16	2200 **1000**	2200 **5005**	2200 **9005**	M-type 1 NO + NC AC 2299 **0001** 2 NO AC 2299 **0011**	1 P 2294 **1005**(6) 3 P 2294 **3005**(6)	Load break switches 6/8 P 2269 **6009**(7) **SIRCOVER M** changeover switches I - 0 - II 2209 **6009**(7) **SIRCOVER M** changeover switches I - I+II - II 2299 **6009**(7)	Complete protection IP2X 2299 **3309**(8)(9) Overall dimensions reduce 2299 **3409**(8)(9)
20	2200 **1001**						
25	2200 **1002**						
32	2200 **1003**						
40	2200 **1004**						
63	2200 **1006**	2200 **5009**	2200 **9009**		1 P 2294 **1009**(6) 3 P 2294 **3009**(6)		
80	2200 **1008**						
100 *	2200 **1010**	2200 **5011**	2200 **9011**		1 P 2294 **1011**(6) 3 P 2294 **3016**(6)	-	-
125 *	2200 **1011**						

** Switch body and all accessories will be available in "SEPTEMBER 2008".*
(1) Front and side operation. - (2) For 6-pole device in direct operation, order 2 x 3-pole device + conversion kit (for external operation, add the shaft + the handle). - (3) For 8-pole device in direct operation, order 2 x 3-pole device + 2 switched fourth pole module + conversion kit (for external operation, add the shaft + the handle). (4) S1 handles and shafts available, see accessoires for more details. - (5) Defeatable handle. - (6) Top and bottom: 2 pieces required to fully shroud both incoming and outgoing terminals. - (7) Delivered with a direct handle. - (8) Delivered with a shaft. - (9) Available for SIRCO M only.

This document is not a contract. SOCOMEC reserves the right to modify features without prior notice in view of continued improvement. 2008 - 2009

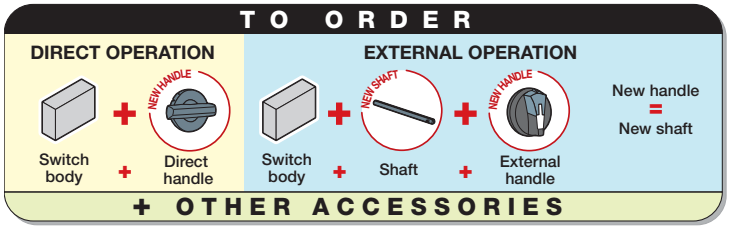

sircm_035_a_1_gb_cat

References

SIRCO MV

sircm_099_a_2_cat

Rating (A)	No. of pole	Switch body only	Direct handle	Door interlocked external front handle	Door interlocked external right side handle	Door interlocked external left side handle	Shaft extensions for external front and side handle
100	3 P	2200 **3110**	Blue 2299 **5022**	***S0-type*** ***I - 0*** Black IP55 1491 **0111**(1) Black IP65 1493 **0111**(1) Red/Yellow IP65 1494 **0111**(1) ***S1-type*** ***I - 0*** Black IP55 1411 **2111**(1) Black IP65 1413 **2111**(1) Red/Yellow IP65 1414 **2111**(1)	***S0-type*** ***I - 0*** Black IP55 1491 **0111**(1) Black IP65 1493 **0111**(1) Red/Yellow IP65 1494 **0111**(1) ***S1-type*** ***I - 0*** Black IP55 1415 **2111** Black IP65 1417 **2111** Red/Yellow IP65 1418 **2111**	***S0-type*** ***I - 0*** Black IP65 149A **9111** Red/Yellow IP65 149B **9111** ***S1-type*** ***I - 0*** Black IP65 141A **2111** Red/Yellow IP65 141B **2111**	***S0-type*** 150 mm 1409 **0615** 200 mm 1409 **0620** 320 mm 1409 **0632** ***S1-type*** 200 mm 1401 **0620** 320 mm 1401 **0632** 400 mm 1401 **0640**
	4 P	2200 **4110**					
125	3 P	2200 **3012**					
	4 P	2200 **4012**					
160	3 P	2200 **3016**					
	4 P	2200 **4016**					

+ ADDITIONAL ACCESSORIES

Rating (A)	Signalisation auxiliary contacts	Pre-break auxiliary contacts	Terminal shrouds	Voltage sensing and power supply tap
100	M-type 1 NO + NC AC 2299 **0001** 2 NO AC 2299 **0011**	U-type 1 NO AC 3999 **0701** 1 NC AC 3999 **0702**	3 P 2294 **3016**(2) 4 P 2294 **4016**(2)	pair 1399 **4006**
125				
160				

(1) Defeatable handle.
(2) Top and bottom: 2 pieces required to fully shroud both incoming and outgoing terminals.

This document is not a contract. SOCOMEC reserves the right to modify features without prior notice in view of continued improvement. 2008 - 2009

Functions
References
Accessories
Characteristics
Dimensions

Accessories

Direct handle

sircm_071_b_1_x_cat

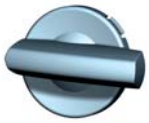

M00 handle

sircm_041_a_1_x_cat

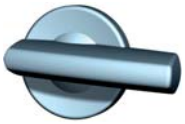

M01 handle

sircm_042_b_1_x_cat

M0 handle

References

*For SIRCO **M** and SIRCOVER **M***

Rating (A)	Handle colour	Handle	References
16 … 80	Blue	M00-type	2299 **5012**
100 … 125	Blue	M01-type	2299 **5032**

*For SIRCO **MV***

Rating (A)	Handle colour	Handle	Reference
100 … 160	Blue	M0-type	2299 **5022**

Door interlocked external handle

sircm_043_a_1_x_cat

S00 handle

sircm_044_a_1_x_cat

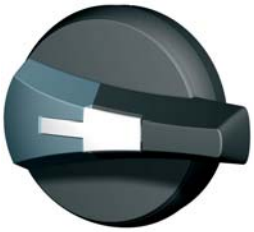

S0 handle

sircm_087_a_1_x_cat

S1 handle

References

*For SIRCO **M** - Front and right side operation I - 0*

Rating (A)	Handle colour	Handle	External IP	References
16 … 80	Black	S00-type	IP55	1471 **1111**(1)
16 … 80	Black	S00-type	IP65	1473 **1111**(1)
16 … 80	Red/Yellow	S00-type	IP65	1474 **1111**(1)
100 … 125	Black	S0-type	IP55	1481 **1111**(1)
100 … 125	Black	S0-type	IP65	1483 **1111**(1)
100 … 125	Red/Yellow	S0-type	IP65	1484 **1111**(1)
16 … 125	Black	S1-type	IP55	1411 **2111**(1)(2)
16 … 125	Black	S1-type	IP65	1413 **2111**(1)(2)
16 … 125	Red/Yellow	S1-type	IP65	1414 **2111**(1)(2)

*For SIRCO **M** - Left side operation I - 0*

Rating (A)	Handle colour	Handle	External IP	References
16 … 80	Black	S00-type	IP65	147A **5111**
16 … 80	Red/Yellow	S00-type	IP65	147B **5111**
100 … 125	Black	S0-type	IP65	148A **5111**
100 … 125	Red/Yellow	S0-type	IP65	148B **5111**
16 … 125	Black	S1-type	IP65	141A **2111**(1)(2)
16 … 125	Red/Yellow	S1-type	IP65	141B **2111**(1)(2)

*For SIRCOVER **M** changeover switches - Front operation I - 0 - II*

Rating (A)	Handle colour	Handle	External IP	References
16 … 80	Black	S00-type	IP65	1473 **1113**
16 … 80	Black	S1-type	IP65	1413 **2113**(1)(2)

*For SIRCOVER **M** changeover switches - Front operation I - I+II - II*

Rating (A)	Handle colour	Handle	External IP	References
16 … 80	Black	S00-type	IP65	1473 **1114**
16 … 80	Black	S1-type	IP65	1413 **2114**(1)(2)

(1) Defeatable handle.
(2) Door interlocked when padlocked in off.

This document is not a contract. SOCOMEC reserves the right to modify features without prior notice in view of continued improvement. 2008 - 2009

Accessories

Door interlocked external handle - SIRCO MV

sircm_044_a_1_x.cat

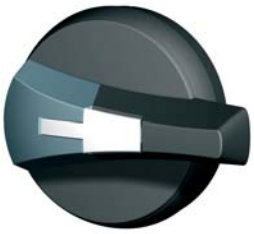

S0 handle

sircm_087_a_1_x.cat

S1 handle

References

S0 type handle - Front and right side operation I - 0

Rating (A)	Handle colour	External IP	References
100 … 160	Black	IP55	1491 **0111**(1)
100 … 160	Black	IP65	1493 **0111**(1)
100 … 160	Red/Yellow	IP65	1494 **0111**(1)

S0 type handle - Left side operation I - 0

Rating (A)	Handle colour	External IP	References
100 … 160	Black	IP65	149A **9111**
100 … 160	Red/Yellow	IP65	149B **9111**

S1 type handle - Front operation I - 0

Rating (A)	Handle colour	External IP	References
100 … 160	Black	IP55	1411 **2111**(1)
100 … 160	Black	IP65	1413 **2111**(1)
100 … 160	Red/Yellow	IP65	1414 **2111**(1)

S1 type handle - Right side operation I - 0

Rating (A)	Handle colour	External IP	References
100 … 160	Black	IP55	1415 **2111**
100 … 160	Black	IP65	1417 **2111**
100 … 160	Red/Yellow	IP65	1418 **2111**

S1 type handle - Left side operation I - 0

Rating (A)	Handle colour	External IP	References
100 … 160	Black	IP65	141A **2111**
100 … 160	Red/Yellow	IP65	141B **2111**

(1) Defeatable handle.

Shaft extensions for external handle

sircm_045_a_1_x.cat

Use

Standard lengths:
- 150 mm,
- 200 mm,
- 320 mm.

Other lengths: please consult us.

For 3/4 pole switches: shaft extensions for external front and side handle.

For 6/8 pole switches and **SIRCOVER M** changeover switches: shaft extensions for external front handle only.

References

For SIRCO M and SIRCOVER M

Rating (A)	Handle	Shaft length (mm)	References
16 … 125	S00-type	150	1407 **0515**
16 … 125	S00-type	200	1407 **0520**
16 … 125	S00-type	320	1407 **0532**
16 … 125	S1-type	200	1404 **0520**
16 … 125	S1-type	320	1404 **0532**
16 … 125	S1-type	400	1404 **0540**

For SIRCO MV

Rating (A)	Handle	Shaft length (mm)	References
100 … 160	S0-type	150	1409 **0615**
100 … 160	S0-type	200	1409 **0620**
100 … 160	S0-type	320	1409 **0632**
100 … 160	S1-type	200	1401 **0620**
100 … 160	S1-type	320	1401 **0632**
100 … 160	S1-type	400	1401 **0640**

Guide cone

Use

The guide cone makes it possible for S00 and S0 handles to accept a shaft with up to 10 mm of vertical play.

References

Rating (A)	Handle	Reference
16 … 160	S00 and S0-type	1419 **0000**(1)

(1) 10 units per pack.

This document is not a contract. SOCOMEC reserves the right to modify features without prior notice in view of continued improvement. 2008 - 2009

SIRCO M & MV
16 to 160 A

NEW

Accessories

Additional poles configurations

SIRCO M

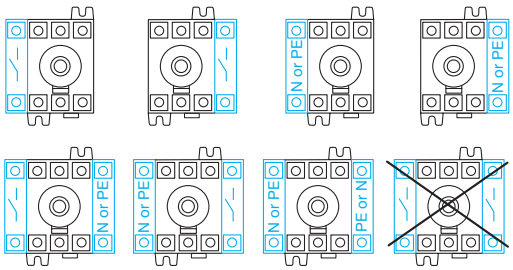

sircm_078_a_1_gb_cat

Switched fourth pole module

sircm_072_b_1_x_cat

Use

Adds one or two poles and transforms:

- 3 pole **SIRCO M** load break switches into a 4 pole,
- 6 pole **SIRCO M** load break switches into a 8 pole,
- 3 pole **SIRCOVER M** changeover switches into a 4 pole.

References

For SIRCO M and SIRCOVER M

Rating (A)	No. of pole	Type	References
16	1 P	switched	2200 **1000**
20	1 P	switched	2200 **1001**
25	1 P	switched	2200 **1002**
32	1 P	switched	2200 **1003**
40	1 P	switched	2200 **1004**
63	1 P	switched	2200 **1006**
80	1 P	switched	2200 **1008**
100	1 P	switched	2200 **1010**
125	1 P	switched	2200 **1011**

Unswitched neutral pole

sircm_073_b_1_x_cat

Use

Transforms the 3-pole switch into a 3-pole + solid neutral.

References

For SIRCO M and SIRCOVER M

Rating (A)	No. of pole	Type	References
16 … 40	1 P	unswitched	2200 **5005**
63 … 80	1 P	unswitched	2200 **5009**
100 … 125	1 P	unswitched	2200 **5011**

Protective earth module

sircm_074_b_1_x_cat

Use

Adds 1 protective earth module pole to the switch-disconnector.

References

For SIRCO M and SIRCOVER M

Rating (A)	No. of pole	Type	References
16 … 40	1 P	unswitched	2200 **9005**
63 … 80	1 P	unswitched	2200 **9009**
100 … 125	1 P	unswitched	2200 **9011**

This document is not a contract. SOCOMEC reserves the right to modify features without prior notice in view of continued improvement. 2008 - 2009

Accessories

Auxiliary contacts configurations

SIRCO M and SIRCOVER M

sircm_081_a_1_cat

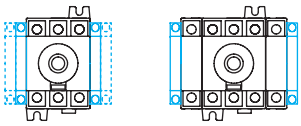

SIRCO MV

sircm_098_a_1_cat

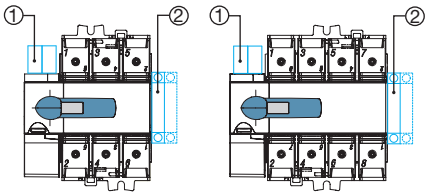

1. Max. 2 "U" type auxiliary contacts.
2. Max. 4 "M" type auxiliary contacts.

M type auxiliary contacts

sircm_075_b

Use

Pre-break and signalisation of positions 0 and I by NO+NC or 2 NO auxiliary contacts.

They can be mounted on the left or on the right side of the device.

Max 4 auxiliary contacts (2 modules).

Pre-break is not guaranteed on the **SIRCO MV**.

Characteristics

NO+NC auxiliary contacts: IP2 with front operation.

References

*For SIRCO **M** and SIRCOVER **M***

Rating (A)	Type	References
16 … 125	1 NO + NC AC	2299 **0001**
16 … 125	2 NO AC	2299 **0011**

*For SIRCO **MV** (1)*

Rating (A)	Type	References
100 … 160	1 NO + NC AC	2299 **0001**
100 … 160	2 NO AC	2299 **0011**

(1) Signalling contact only.

Characteristics

Contact type	Nominal current (A)	Operating current I_e (A) 230 VAC AC-13	AC-15
NO+NC	10	10	6

U type auxiliary contacts

sircm_048_a_1_x_cat

Use

Pre-break and signalisation by NO or NC auxiliary contact can be mounted on the device.

Only switable for **SIRCO MV** switches.

Max 2 auxiliary contacts.

References

*For SIRCO **MV***

Rating (A)	Type	References
100 … 160	1 NO AC	3999 **0701**
100 … 160	1 NC AC	3999 **0702**

This document is not a contract. SOCOMEC reserves the right to modify features without prior notice in view of continued improvement. 2008 - 2009

Functions
References
Accessories
Characteristics
Dimensions

Accessories

Terminal shrouds

sircm_049_a_1_x_cat

Use

Top and bottom protection against direct contact with the terminals or connection parts:
- 1 or 3 pole for **SIRCO M** and **SIRCOVER M**,
- 3 or 4 pole for **SIRCO MV**.

1 piece required to fully shroud both incoming and outgoing terminals.

Advantage

Perforations allowing thermographic inspection without removing.

References

For SIRCO M and SIRCOVER M

Rating (A)	No. of pole	Position	References
16 … 40	1 P	top and bottom	2294 **1005**
16 … 40	3 P	top and bottom	2294 **3005**
63 … 80	1 P	top and bottom	2294 **1009**
63 … 80	3 P	top and bottom	2294 **3009**
100 … 125	1 P	top and bottom	2294 **1011**
100 … 125	3 P	top and bottom	2294 **3016**

For SIRCO MV

Rating (A)	No. of pole	Position	References
100 … 160	3 P	top and bottom	2294 **3016**
100 … 160	4 P	top and bottom	2294 **4016**

Conversion kit

sircm_050_c

*Conversion kit for 6 or 8 pole **SIRCO M** load break switches*

sircm_086_b_1_cat

sircm_097_b_1_x_cat

*Conversion kit for 3 or 4 pole **SIRCOVER M** changeover switches (I - 0 - II) or (I - I+II - II)*

Use

This accessory enables the assembly of two 3 pole switches + additional poles in order to achieve:
- 6 or 8 pole **SIRCO M** load break switches,
- 3 or 4 pole **SIRCOVER M** changeover switches.

SIRCOVER M changeover switches ensure switching, transfer of sources (I - 0 - II) or transfer of two low voltage circuits on load (I - I+II - II), with the continuity of power supply.

For direct operation, the handle is included but not the shaft.

For external operation, add the handle + the shaft.

References

For SIRCO M

Rating (A)	Type	Reference
16 … 80	6/8-pole load break switches	2269 **6009**

For SIRCOVER M

Rating (A)	Type	References
16 … 80	changeover switches (I - 0 - II)	2209 **6009**
16 … 80	changeover switches (I - I+II - II)	2299 **6009**

Voltage sensing and power supply tap

atysm_026_a_1_cat

Use

Allows up to 2 x <=1.5 mm² voltage sensing or power cables connection.
Only suitable for **SIRCO MV** switches.

Reference

For SIRCO MV

Rating (A)	No. of parts	Reference
100 … 160	Pair	1399 **4006** (1)

(1) 2 parts per reference.

This document is not a contract. SOCOMEC reserves the right to modify features without prior notice in view of continued improvement. 2008 - 2009

Accessories

Door / Panel mounting kit

sircm_051_b

Use

This kit enables direct mounting of the switch on the door panel, on the right or left side of the panel.

Moreover, the connection clamps of the switch are always accessible.

The external handle is quick and easy to install due to an internal locking nut mounted on the inside of the enclosure.

2 kits are available:
- one for complete protection IP2X,
- one with overall dimensions reduced.

Reference

*For SIRCO **M***

Rating (A)	No. of pole	Description	References
16 … 80	3/4 P	Complete protection IP2X	2299 **3309**(1)
16 … 80	3/4 P	Overall dimensions reduced	2299 **3409**(1)

(1) Delivered with shaft.

Cap for side operation mounting

sircm_126_a_1_cat

Use

Accessory for capping the front face of the **SIRCO M** when utilising in side operation.
20 units per pack.
This piece can be snapped on the switch body directly.

Reference

*For SIRCO **M***

Rating (A)	Pack qty	Reference
16 … 80	20	2299 **9409**

6/8 pole joining accessory

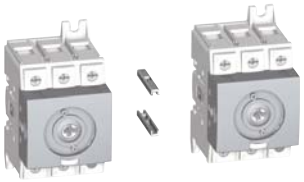

sircm_134_a_1_cat

Use

40 units per pack, they allow the joining of two 3 pole switches (+ additional pole) in order to form a 6 or 8 pole switch for external side operation.

For multi-poles switches, please consult us.

Reference

*For SIRCO **M***

Rating (A)	Pack qty	Reference
16 … 80	40	2299 **9909**

DIN rail locking clip

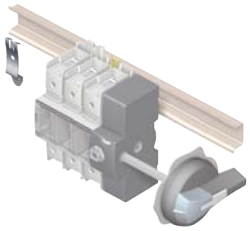

sircm_128_a_1_cat

Use

This locking clip prevents the **SIRCO MV** from sliding when DIN rail mounted. For use in external side operation.

Reference

*For SIRCO **MV***

Rating (A)	Type	References
100 … 160	M4	5000 **0041**
100 … 160	M5	5000 **0051**

This document is not a contract. SOCOMEC reserves the right to modify features without prior notice in view of continued improvement. 2008 - 2009

SIRCO M & MV
16 to 160 A

Enclosed SIRCO M

Polycarbonate enclosure

cdf_337_a_1_cat

General characteristics
- Equipped with a 3 pole SIRCO M.
- 1 removable neutral terminal and 1 removable earth terminal.
- 4 M16 pre-drill holes.
- 8 M20 / M25 pre-drill holes.
- Protection IP65.
- Possibility of 1 adding additional pole.
- Possibility of 1 adding M type auxiliary contact module.

References

Empty enclosures

Rating (A)	Switch type	No. of pole	Handle colour	Enclosure colour	References
16 … 40	M1	3 P	Black	Grey	2215 **9305**
16 … 40	M1	3 P	Red	Yellow	2215 **9405**
63 … 100	M2	3 P	Black	Grey	2215 **9309**
63 … 100	M2	3 P	Red	Yellow	2215 **9409**

Enclosed switches

Rating (A)	Switch type	No. of pole	Handle colour	Enclosure colour	References
16	M1	3 P	Black	Grey	2215 **3300**
16	M1	3 P	Red	Yellow	2215 **3400**
20	M1	3 P	Black	Grey	2215 **3301**
20	M1	3 P	Red	Yellow	2215 **3401**
25	M1	3 P	Black	Grey	2215 **3302**
25	M1	3 P	Red	Yellow	2215 **3402**
32	M1	3 P	Black	Grey	2215 **3303**
32	M1	3 P	Red	Yellow	2215 **3403**
40	M1	3 P	Black	Grey	2215 **3304**
40	M1	3 P	Red	Yellow	2215 **3404**
63	M2	3 P	Black	Grey	2215 **3306**
63	M2	3 P	Red	Yellow	2215 **3406**
80	M2	3 P	Black	Grey	2215 **3308**
80	M2	3 P	Red	Yellow	2215 **3408**
100	M2	3 P	Black	Grey	2215 **3309**
100	M2	3 P	Red	Yellow	2215 **3409**

• **SIRCO M 16 to 40 A**

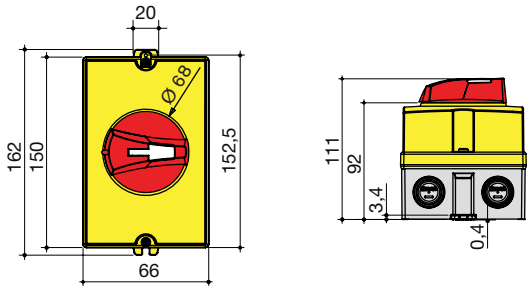

sircm_130_b_1_cat

• **SIRCO M 63 to 100 A**

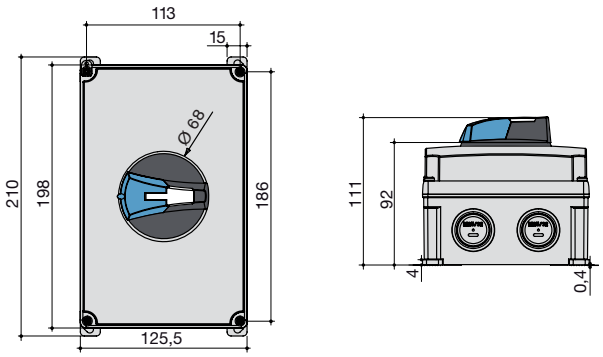

sircm_131_b_1_cat

This document is not a contract. SOCOMEC reserves the right to modify features without prior notice in view of continued improvement. 2008 - 2009

Characteristics

SIRCO M - SIRCOVER M

Thermal current I_{th} (40° C)		16 A	20 A	25 A	32 A	40 A	63 A	80 A	100 A *	125 A *
Rated insulation voltage U_i (V)		800	800	800	800	800	800	800	800	800
Rated impulse withstand voltage U_{imp} (kV)		8	8	8	8	8	8	8	8	8
Rated operational currents I_e (A)										
Rated voltage	Load duty category	A/B (1)	A/B (1)	A/B (1)	A/B (1)	A/B (1)	A/B (1)	A/B (1)	A/B (1)	A/B (1)
415 VAC	AC-21 A / AC-21 B	16/16	20/20	25/25	32/32	40/40	63/63	80/80	100/100	125/125
	AC-22 A / AC-22 B	16/16	20/20	25/25	32/32	40/40	63/63	80/80	100/100	125/125
	AC-23 A / AC-23 B	16/16	20/20	25/25	32/32	40/40	63/63	80/80	100/100	125/125
500 VAC	AC-21 A / AC-21 B	16/16	20/20	25/25	32/32	40/40	63/63	80/80	100/100	125/125
	AC-22 A / AC-22 B	16/16	20/20	25/25	32/32	40/40	63/63	80/80	100/100	125/125
	AC-23 A / AC-23 B	16/16	20/20	25/25	25/25	25/25	63/63	63/63	80/80	100/100
690 VAC(2)	AC-21 A / AC-21 B	16/16	20/20	25/25	32/32	40/40	63/63	80/80	100/100	125/125
	AC-22 A / AC-22 B	16/16	20/20	25/25	32/32	32/40	40/63	63/80	80/100	100/125
	AC-23 A / AC-23 B	16/16	20/20	25/25	25/25	25/25	40/40	40/40	63/63	63/63
Operational power (kW) (1)(3)										
At 400 VAC without pre-break AC in AC-23		7.5	9	11	15	18.5	30	37	45	55
At 500 VAC without pre-break AC in AC-23		7.5	9	11	15	15	30	37	45	55
At 690 VAC without pre-break AC in AC-23		7.5	11	15	18.5	18.5	30	37	45	55
Fuse protected short-circuit withstand (kA rms prospective) (4)										
Prospective short-circuit current (kA rms)		50	50	50	50	50	50	50	50	50
Associated fuse rating (A)		16	20	25	32	40	63	80	100	125
Overload capacity (U_e 415 VAC)										
Rated short-time withstand current 0.3 s. I_{cw} (kA rms)		2.5	2.5	2.5	2.5	2.5	3	3	5	5
Rated short-circuit making capacity Icm (kA peak) (4)		6	6	6	6	6	9	9	12	12
Connection										
Minimum Cu cable section (mm²)		1.5	1.5	1.5	1.5	1.5	2.5	2.5	10	10
Maximum Cu cable section (mm²)		16	16	16	16	16	35	35	70	70
Tightening torque min/max (Nm)		2 / 2.2	2 / 2.2	2 / 2.2	2 / 2.2	2 / 2.2	3.5 / 3.85	3.5 / 3.85	-	-
Mechanical characteristics										
Endurance (number of operating cycles)		100 000	100 000	100 000	100 000	100 000	100 000	100 000	100 000	100 000
Operating effort (Nm)		0.8	0.8	0.8	0.8	0.8	1	1	-	-
Weight of 3 P switch (kg)		0.16	0.16	0.16	0.16	0.16	0.26	0.26	0.7	0.7

** Switch body and all accessories will be available in "SEPTEMBER 2008".*
(1) A/B: Category with index A = frequent operation - Category with index B = infrequent operation.
(2) With terminal shrouds or phase barrier.
(3) The power value is given for information only, the current values vary from one manufacturer to another.
(4) For a rated operating voltage U_e = 400 VAC.

This document is not a contract. SOCOMEC reserves the right to modify features without prior notice in view of continued improvement. 2008 - 2009

SIRCO M & MV
16 to 160 A

Characteristics

Thermal current I_{th} (40° C)		SIRCO MV 100 A	125 A	160 A
Rated insulation voltage U_i (V)		800	800	800
Rated impulse withstand voltage U_{imp} (kV)		8	8	8
Rated operational currents I_e (A)				
Rated voltage	Load duty category	A/B(1)	A/B(1)	A/B(1)
415 VAC	AC-21 A / AC-21 B	100/100	125/125	160/160
	AC-22 A / AC-22 B	100/100	125/125	160/160
	AC-23 A / AC-23 B	100/100	125/125	125/160
500 VAC	AC-21 A / AC-21 B	100/100	125/125	160/160
	AC-22 A / AC-22 B	100/100	125/125	125/160
	AC-23 A / AC-23 B	80/80	100/100	100/100
690 VAC(2)	AC-20 A / AC-20 B	100/100	125/125	160/160
	AC-21 A / AC-21 B	100/100	125/125	160/160
	AC-22 A / AC-22 B	63/80	80/100	100/125
	AC-23 A / AC-23 B	63/63	80/80	80/80
Operational power (kW) (1)(4)				
At 400 VAC without pre-break AC in AC-23		45	55	75
At 500 VAC without pre-break AC in AC-23		45	55	75
At 690 VAC without pre-break AC in AC-23		45	75	75
Reactive power (kvar) (4)				
At 400 VAC		45	55	75
Fuse protected short-circuit withstand (kA rms prospective) (5)				
Prospective short-circuit current (kA rms)		100	65	50
Associated fuse rating (A)		100	125	160
Overload capacity (U_e 415 VAC)				
Rated short-time withstand current 0.3 s. I_{cw} (kA rms)		7	7	7
Rated short-circuit making capacity Icm (kA peak) (4)		12	12	12
Connection				
Minimum Cu cable section (mm²)		10	10	10
Maximum Cu cable section (mm²)		70	70	70
Tightening torque min/max (Nm)		4 / 4.4	4 / 4.4	4 / 4.4
Mechanical characteristics				
Endurance (number of operating cycles)		50 000	50 000	50 000
Operating effort (Nm)		4	4	4
Weight of 3 P switch (kg)		0.7	0.7	0.7
Weight of 4 P switch (kg)		0.9	0.9	0.9

(1) A/B: Category with index A = frequent operation - Category with index B = infrequent operation.
(2) With terminal shrouds or phase barrier
(3) 4-pole device with 2 pole in series by polarity.
(4) The power value is given for information only, the current values vary from one manufacturer to another.
(5) For a rated operating voltage U_e = 400 VAC.

This document is not a contract. SOCOMEC reserves the right to modify features without prior notice in view of continued improvement. 2008 - 2009

Dimensions

SIRCO M

• **16 to 80 A**

Toggle operation

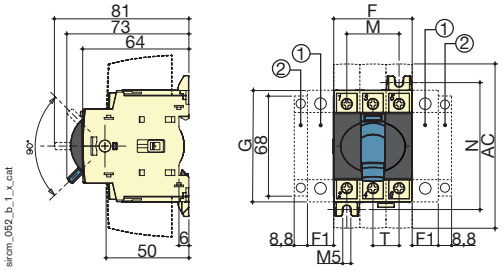

Direct operation with handle

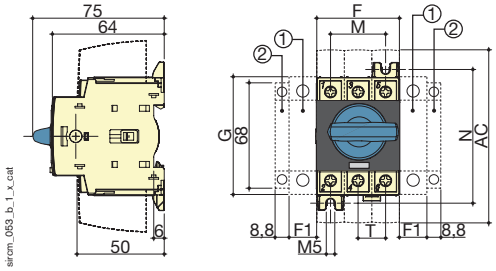

1. 1 switched fourth pole module (1 per device max.) **or** 1 unswitched neutral pole **or** 1 protecive earth module **or** 1 auxiliary contact
2. 1 auxiliary contact only

Note: Max 4 additional blocks

External front operation

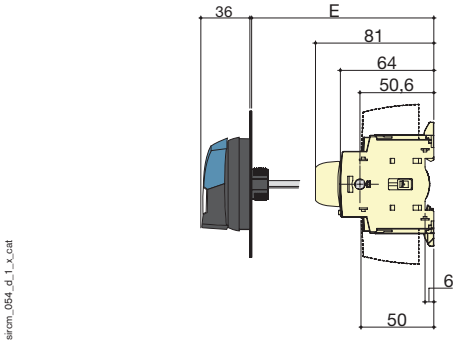

External side operation

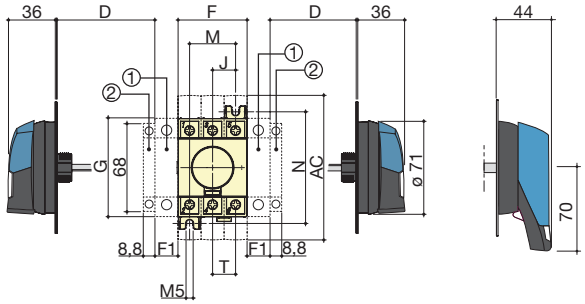

Rating (A)	Overall dimensions D min.	D max.	E min.	E max.	Terminal shrouds AC	Switch body F	F1	G	J	Switch mounting M	N	Connection terminals T
16 ... 40	30	235	100	372	110	45	15	68	15	30	75	15
63 ... 80	30	235	100	372	110	52.5	17.5	76	17.5	35	85	17.5

1. 1 switched fourth pole module (1 per device max.) **or** 1 unswitched neutral pole **or** 1 protecive earth module **or** 1 auxiliary contact
2. 1 auxiliary contact only

Note: Max 4 additional blocks

*Direct front operation for 6/8-pole **SIRCO M** load break switches or 3/4-pole **SIRCOVER M** changeover switches*

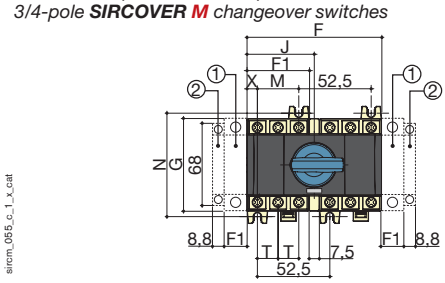

External front operation

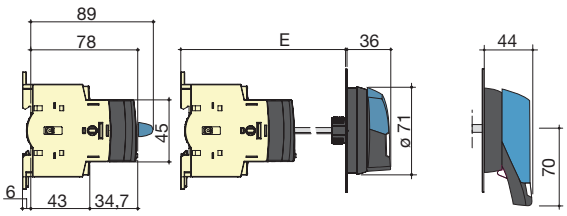

Rating (A)	Overall dimensions E min.	E max.	Switch body F	F1	G	J	Switch mounting M	N	Connection terminals T	X
16 ... 40	105	372	97.5	45	68	48.75	30	75	15	7.5
63 ... 80	105	372	105	52.5	76	52.5	35	85	17.5	8.75

1. 1 switched fourth pole module (1 per device max.) **or** 1 unswitched neutral pole **or** 1 protecive earth module **or** 1 auxiliary contact
2. 1 auxiliary contact only

Note: Max 4 additional blocks

This document is not a contract. SOCOMEC reserves the right to modify features without prior notice in view of continued improvement. 2008 - 2009

Dimensions

SIRCO M

• **100 to 125 A**

Direct operation

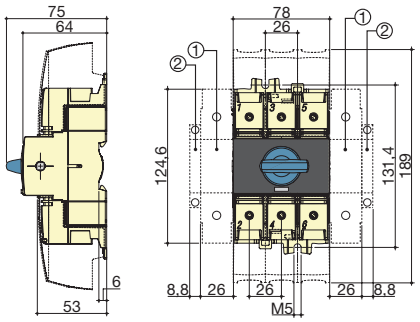

sircm_056_b_1_x_cat

1. 1 switched fourth pole module (1 per device max.) **or** 1 unswitched neutral pole **or** 1 protecive earth module **or** 1 auxiliary contact
2. 1 auxiliary contact only

Note: Max 4 additional blocks

External front operation

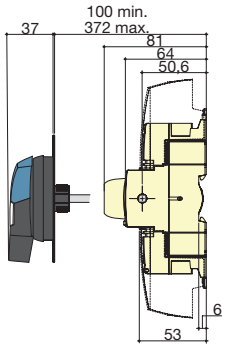

sircm_057_d_1_x_cat

External side operation

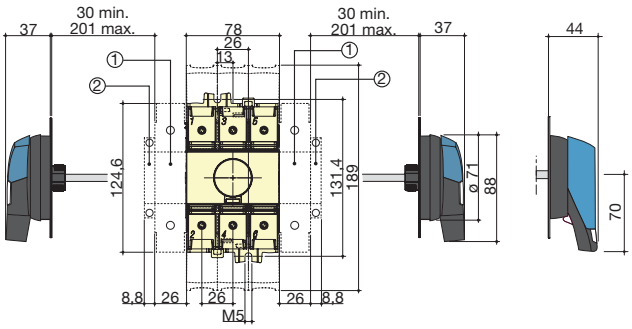

1. 1 switched fourth pole module (1 per device max.) **or** 1 unswitched neutral pole **or** 1 protecive earth module **or** 1 auxiliary contact
2. 1 auxiliary contact only

Note: Max 4 additional blocks

This document is not a contract. SOCOMEC reserves the right to modify features without prior notice in view of continued improvement. 2008 - 2009

Dimensions

SIRCO MV

• **100 to 160 A**

Direct front operation

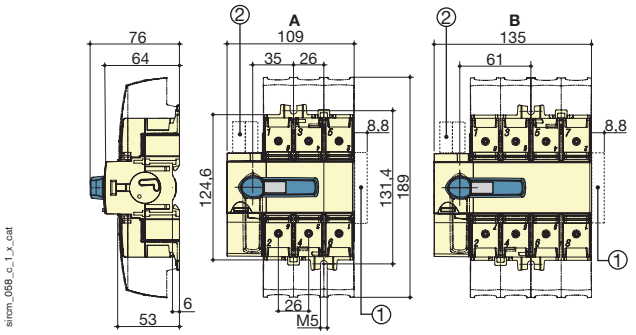

External front operation

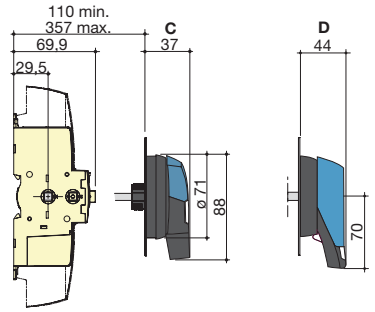

A. 3 pole
B. 4 pole
C. S0 handle
D. S1 handle

1. Max. 4 “M” type auxiliary contacts
2. Max. 2 “U” type auxiliary contacts

External side operation

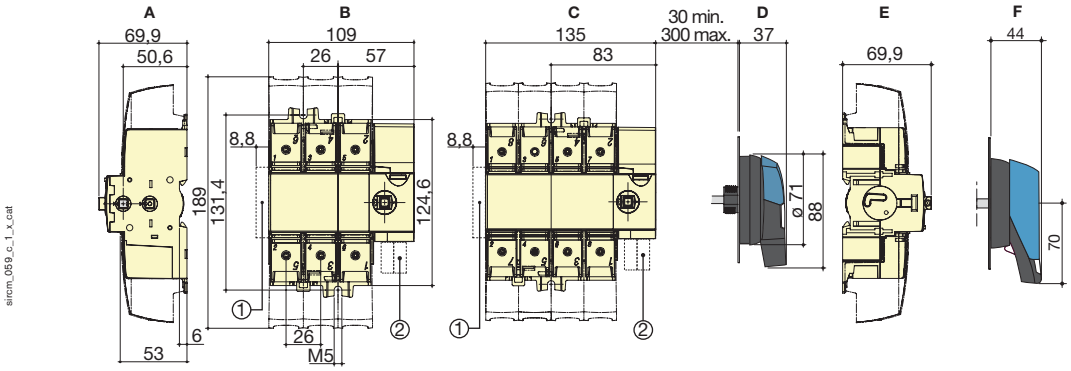

A. Side right operation
B. 3 pole
C. 4 pole
D. S0 handle
E. Side left operation
F. S1 handle

1. Max. 4 “M” type auxiliary contacts
2. Max. 2 “U” type auxiliary contacts

This document is not a contract. SOCOMEC reserves the right to modify features without prior notice in view of continued improvement. 2008 - 2009

Dimensions

Door drilling - S00 / S0

With fixing nut

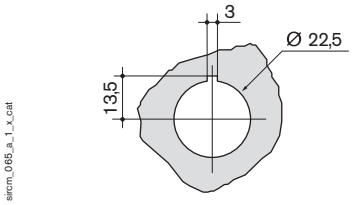

IP55 - with 2 fixing clips

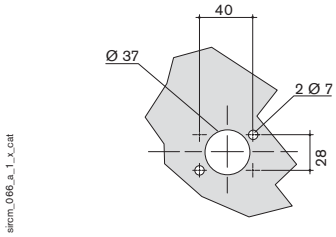

IP65 - with 4 fixing screws

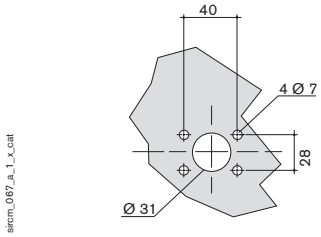

Operating handle - S00 / S0

Front and right side operation

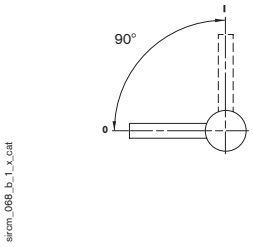

Left side operation

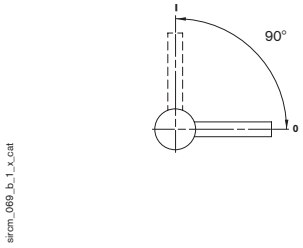

*Front operation for **SIRCOVER M** changeover switches I-0-II or I-I+II-II*

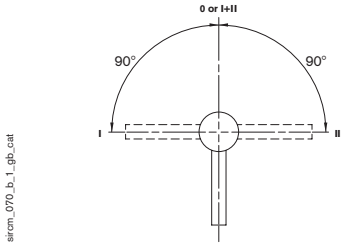

This document is not a contract. SOCOMEC reserves the right to modify features without prior notice in view of continued improvement. 2008 - 2009

Dimensions

Door drilling - S1

IP65 - front operation with 4 fixing screws

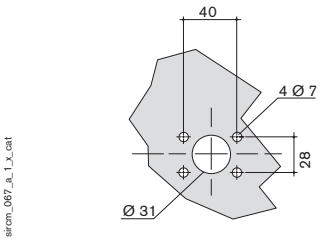

IP55 - side operation with 2 fixing clips

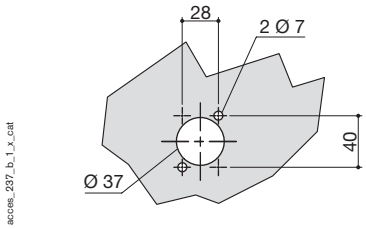

Operating handle - S1

Front operation

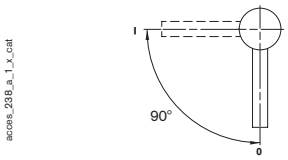

Right side operation

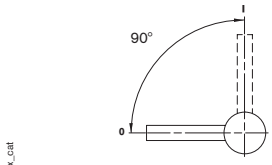

Left side operation

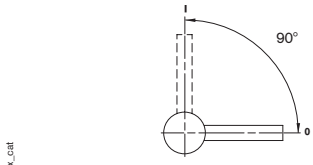

This document is not a contract. SOCOMEC reserves the right to modify features
without prior notice in view of continued improvement. 2008 - 2009

SIRCO
125 to 4000 A

Functions
References
Accessories
Enclosed load break switches
Characteristics
Dimensions

sirco_296_a_1_cat

sirco_300_b

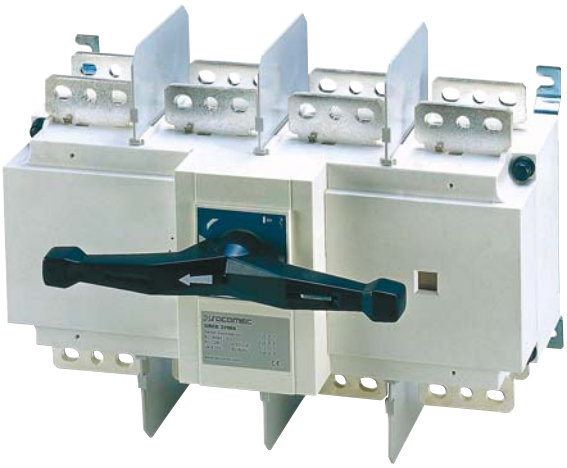

sirco_353_a_1_cat

Functions

SIRCO switches are manually operated or motorised multipolar load break switches. They break on and off under load and provide safety isolation for any low voltage circuit.

Conformity to standards

- IEC 60947-3
- EN 60947-3
- VDE 0660 - 107 (1992)
- NBN EN 60947-3
- BS EN 60947-3

Approvals and certifications(1)

- Bureau Véritas
- Lloyd's Register of Shipping
- CEBEC (Belgium)
- FI (Finland)
- ASEFA
- KEMA
- CCA
- GOST (Russia)
- BBJ Poland (attestation of verification)
- PSA E03.15.605.G
- RENAULT EB03.15.613

(1) In progress for certain ratings.

General characteristics

- Fully visible breaking.
- High thermal and dynamic withstand.
- Arduous utilisation categories (AC-22 and AC-23).
- Good electrical and mechanical endurance.
- High resistance to humidity (supplied "tropicalised").

Available on request

- Early break auxiliaries.
- SIRCO 9 and 12 poles up to 1600 A.
- 3 pole + solid neutral.
- Early break advanced neutral for networks charged with harmonics.
- Conducting neutral.
- Neutral earthing stud.
- Connection terminals bolts not supplied from 800 to 4000 A.
- Double rated Neutral.

This document is not a contract. SOCOMEC reserves the right to modify features without prior notice in view of continued improvement. 2008 - 2009

Illustrations

Front operation

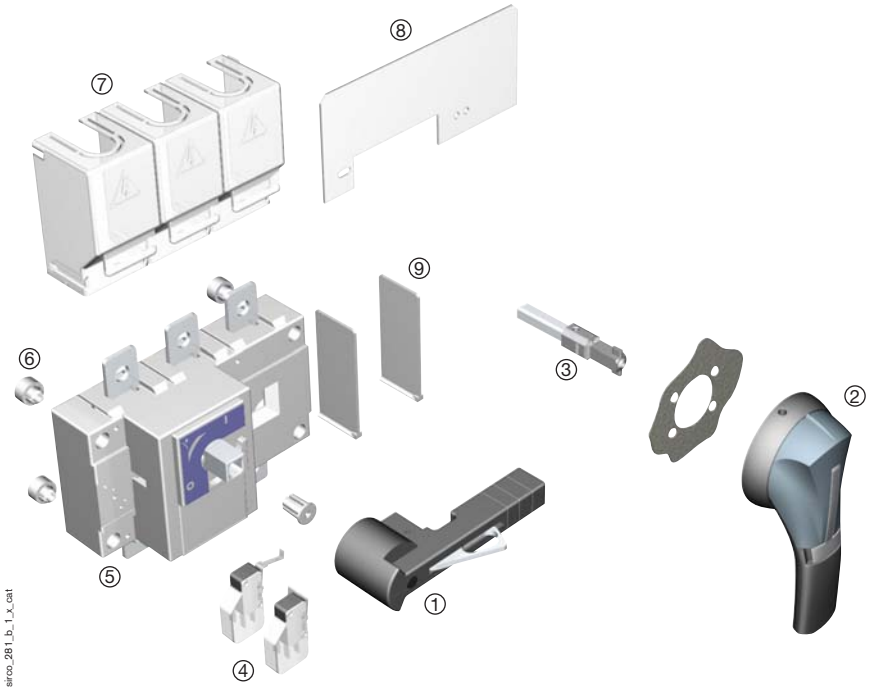

Overview (for further details, please see the installation instructions supplied with each device).

1. Direct front handle.
2. Door interlocked external handle.
3. Shaft extension.
4. IP2 Auxiliary contacts.
5. Switch body only.
6. Spacers.
7. Terminal shrouds.
8. Shrouded distribution block.
9. Inter phase barrier.

External right-side operation (consult us)

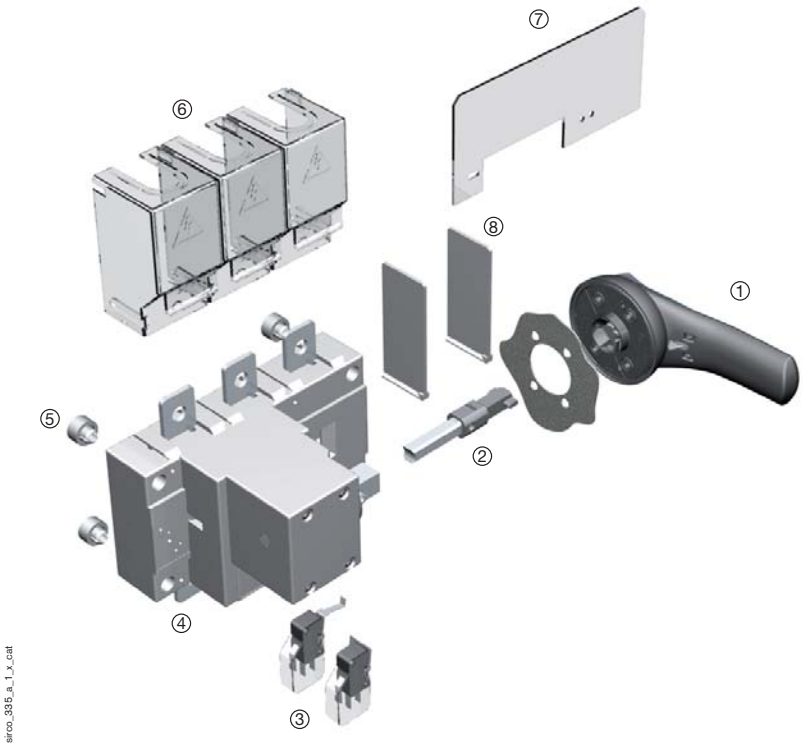

1. Door interlocked external right-side handle.
2. Shaft extension.
3. IP2 auxiliary contacts.
4. Switch body only.
5. Spacers.
6. Terminal shrouds.
7. Shrouded distribution block.
8. Inter phase barrier.

This document is not a contract. SOCOMEC reserves the right to modify features without prior notice in view of continued improvement. 2008 - 2009

SIRCO
125 to 4000 A

Functions
References
Accessories
Enclosed load break switches
Characteristics
Dimensions

References

Front operation 3 and 4 pole

sirco_295_a_2_cat

Rating (A)	No. of poles	Switch body only	Direct handle	Door interlocked external handle	Shaft extensions for external handle	Auxiliary contacts	Terminal shrouds	Terminal screens
125	3 P	2600 **3014**(1)	Black* 2699 **5042**	S2 type Black IP55* 1421 **2111**	200 mm 1400 **1020**	1st NO/NC contact 2699 **0031**	3 P 2694 **3014**(2)(3)	3 P 2698 **3012**(2)(4)
	4 P	2600 **4014**(1)					4 P 2694 **4014**(2)(3)	P 2698 **4012**(2)(4)
160	3 P	2600 **3017**(1)	Red 2699 **5043**					
	4 P	2600 **4017**(1)						
200	3 P	2600 **3021**	Black* 2699 **5052**	Black IP65 1423 **2111**	320 mm* 1400 **1032**	2nd NO/NC contact 2699 **0032**	3 P 2694 **3021**(2)(3)	3 P 2698 **3020**(2)(4)
	4 P	2600 **4021**					4 P 2694 **4021**(2)(3)	4 P 2698 **4020**(2)(4)
250	3 P	2600 **3026**(1)	Red 2699 **5053**	Red IP65 1424 **2111**	500 mm 1400 **1050**			
	4 P	2600 **4026**(1)						
315	3 P	2600 **3032**					3 P 2694 **3051**(2)(3)	3 P 2698 **3050**(2)(4)
	4 P	2600 **4032**					4 P 2694 **4051**(2)(3)	4 P 2698 **4050**(2)(4)
400	3 P	2600 **3041**(1)						
	4 P	2600 **4041**(1)						
500	3 P	2600 **3051**(1)						
	4 P	2600 **4051**(1)						
630	3 P	2600 **3064**(1)						
	4 P	2600 **4064**(1)						

** Standard.*
(1) Available enclosed (see page A.37 and A.38 "Enclosed load break switches").
(2) Top or bottom.
(3) 2 sets required to shroud top and bottom terminals on 3/4 pole switch.
(4) Order 2 references to shield top and bottom terminals.

For more informations: see "Accessories" pages.

This document is not a contract. SOCOMEC reserves the right to modify features without prior notice in view of continued improvement. 2008 - 2009

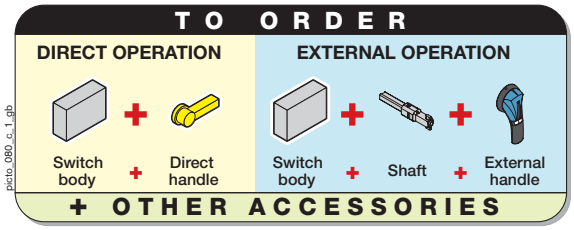

References

Front operation 3 and 4 pole

Rating (A)	No. of poles	Switch body only	Direct handle	Door interlocked external handle**	Shaft extensions for external handle**	Auxiliary contacts	Terminal screens
800	3 P	2600 **3081**(1)	Black* 2799 **7012** Red 2799 **7013**	S4 type Black IP65* 1443 **3111** Red IP65 1444 **3111**	200 mm 1401 **1520** 320 mm* 1401 **1532** 400 mm 1401 **1540**	1st NO/NC contact 2699 **0031** 2nd NO/NC contact 2699 **0032**	3 P 2698 **3080**(2)(3) 4 P 2698 **4080**(2)(3)
	4 P	2600 **4081**(1)					
1000	3 P	2600 **3099**(1)					
	4 P	2600 **4099**(1)					
CD 1250	3 P	2600 **3119**					
	4 P	2600 **4119**					
1250	3 P	2600 **3121**(1)					3 P 2698 **3120**(2)(3) 4 P 2698 **4120**(2)(3)
	4 P	2600 **4121**(1)					
1600	3 P	2600 **3161**					
	4 P	2600 **4161**					
1800	3 P	2600 **3181**					
	4 P	2600 **4181**					
2000	3 P	2600 **3200**		Black IP65* 2799 **7136** Red IP65 2799 **7134**	200 mm 2799 **3015** 320 mm* 2799 **3018**		3 P 2698 **3200**(2)(3) 4 P 2698 **4200**(2)(3)
	4 P	2600 **4200**					
2500	3 P	2600 **3250**					
	4 P	2600 **4250**					
3200	3 P	2600 **3320**					
	4 P	2600 **4320**					
4000	3 P	2600 **3400**	Black* 2799 **7062** Red 2799 **7063**	Black IP65* 2799 **7145**	320 mm* 2799 **3018**	included	included
	4 P	2600 **4400**					

** Standard.*
*** S type handle not suitable for SIRCO 2000 to 4000 A ratings.*
(1) Available enclosed (see page A.37 and A.38 "Enclosed load break switches").
(2) Top or bottom.
(3) Order 2 references to shield top and bottom terminals.

For more informations: see "Accessories" pages.

This document is not a contract. SOCOMEC reserves the right to modify features without prior notice in view of continued improvement. 2008 - 2009

SIRCO
125 to 4000 A

Functions
References
Accessories
Enclosed load break switches
Characteristics
Dimensions

References

Front operation 6 and 8 pole

Rating (A)(1)	No. of poles(1)	Switch body only	Direct handle	Door interlocked external handle	Shaft extensions for external handle	Auxiliary contact	Terminal shrouds	Terminal screens
125	6 P	2601 **6013**	Black* 4199 **5012**	S2 type Black IP55* 1421 **2111** Red/Yellow IP65 1424 **2111**	200 mm* 1400 **1020** 320 mm 1400 **1032**	1st NO/NC contact 2699 **0061** 2nd NO/NC contact 2699 **0062**	6 P 2694 **3014**(1)(2) 8 P 2694 **4014**(1)(2)	6 P 1509 **3012**(1) 8 P 1509 **4012**(1)
	8 P	2601 **8013**						
160	6 P	2601 **6016**						
	8 P	2601 **8016**						
250	6 P	2601 **6025**	Black* 2799 **7052** Red 2799 **7053**	S3 type Black IP65* 1433 **3111** Red/Yellow IP65 1434 **3111**	200 mm 1401 **1520** 320 mm* 1401 **1532**		2694 **3021**(1)(2)	1509 **3025**(1)
	8 P	2601 **8025**					2694 **4021**(1)(2)	1509 **4025**(1)
400	6 P	2601 **6040**					6 P 2694 **3051**(1)(2) 8 P 2694 **4051**(1)(2)	6 P 1509 **3063**(1) 8 P 1509 **4063**(1)
	8 P	2601 **8040**						
630	6 P	2601 **6063**						
	8 P	2601 **8063**						
800	6 P	2601 **6080**	Black* 2799 **7012** Red 2799 **7013**				/	6 P 1509 **3080**(1) 8 P 1509 **4080**(1)
	8 P	2601 **8080**						
1000	6 P	2601 **6100**						
	8 P	2601 **8100**						
1250	6 P	2601 **6120**						
	8 P	2601 **8120**						
1600	6 P	2601 **6160**						1509 **3160**(1)
	8 P	2601 **8160**						1509 **4160**(1)

** Standard.*
(1) Top or bottom.
(2) 4 sets required to shroud top and bottom terminals on 6/8 pole switch.

For more informations : see "Accessories" pages.

This document is not a contract. SOCOMEC reserves the right to modify features without prior notice in view of continued improvement. 2008 - 2009

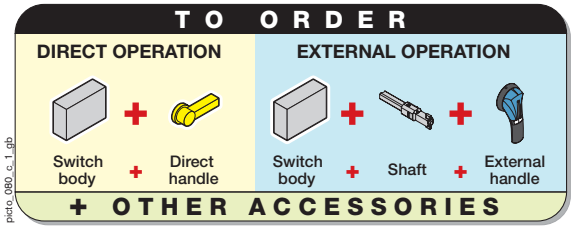

Accessories

Direct handle

acces_128_a_1_cat

acces_129_a_1_cat

References

Rating (A)	No. of poles	Handle colour	References
125 … 160	3/4 P	Black	2699 **5042**
125 … 160	6/8 P	Black	4199 **5012**
125 … 160	3/4 P	Red	2699 **5043**
200 … 630	3/4 P	Black	2699 **5052**
200 … 630	3/4 P	Red	2699 **5053**
250 … 630	6/8 P	Black	2799 **7052**
250 … 630	6/8 P	Red	2799 **7053**
800 … 3200	3/4 P	Black	2799 **7012**
800 … 3200	3/4 P	Red	2799 **7013**
800 … 1600	6/8 P	Black	2799 **7012**
800 … 1600	6/8 P	Red	2799 **7013**
4000	3/4 P	Black	2799 **7062**
4000	3/4 P	Red	2799 **7063**

Door interlocked external handle

acces_150_a_1_cat

S2-type handle

Use

The door interlocked external operation includes a padlockable handle, an escutcheon and must be combined with a shaft extensions.

acces_152_a_2_cat

S4-type handle

acces_151_a_1_cat

S3-type handle

References

Rating (A)	No. of poles	Handle type	Handle colour	External IP[1]	References
125 … 630	3/4 P	S2	Black	IP55	1421 **2111**
125 … 630	3/4 P	S2	Black	IP65	1423 **2111**
125 … 630	3/4 P	S2	Red/Yellow	IP65	1424 **2111**
125 … 160	6/8 P	S2	Black	IP55	1421 **2111**
125 … 160	6/8 P	S2	Black	IP65	1423 **2111**
125 … 160	6/8 P	S2	Red/Yellow	IP65	1424 **2111**
250 … 1600	6/8 P	S3	Black	IP65	1433 **3111**
250 … 1600	6/8 P	S3	Red/Yellow	IP65	1434 **3111**
800 … 1800	3/4 P	S4	Black	IP65	1443 **3111**
800 … 1800	3/4 P	S4	Red/Yellow	IP65	1444 **3111**
2000 … 3200	3/4 P	V	Black	IP65	2799 **7136**
2000 … 3200	3/4 P	V	Red	IP65	2799 **7134**
4000	3/4 P	V	Black	IP65	2799 **7145**
4000	3/4 P	-	Red		consult us

(1) IP: protection rating according to IEC 60529 standard.

S-type handle adapter

acces_187_a_1_cat

Use

Enables new S type handles to be mounted using old fixing holes for replacement or retrofit applications.

Dimensions

Adds 12 mm to the depth.

Référence

Colour	External IP[1]	Pack qty	Référence
Black	IP65	10	1493 **0000**

(1) IP: protection rating according to IEC 60529 standard.

This document is not a contract. SOCOMEC reserves the right to modify features without prior notice in view of continued improvement. 2008 - 2009

Functions
References
Accessories
Enclosed load break switches
Characteristics
Dimensions

Accessories

Alternative S-type handle cover colours

acces_198_a_1_cat

Use

For single lever handles S2, S3-type and for double lever handles S4-type.
Other colours: please consult us.

References

Colour	Pack qty	Handle type	References
Light grey	50	S2, S3	1401 **0001**
Dark grey	50	S2, S3	1401 **0011**
Light grey	50	S4	1401 **0031**
Dark grey	50	S4	1401 **0041**

Shaft extensions for external handle

acces_143_b_1_cat

acces_144_b_1_cat

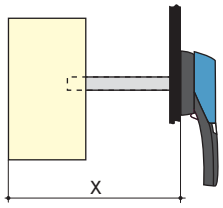

acces_202_a_1_x_cat

Use

Standard length:
- 200 mm,
- 250 mm,
- 300 mm,
- 400 mm,
- 500 mm,
- 750 mm.

Other lengths: please consult us.

References

For 3/4 pole

Rating (A)	Dimension X (mm)	Shaft length (mm)	References
125 ... 160	125 … 250	200	1400 **1020**
125 ... 160	125 … 300	250	1400 **1025**
125 ... 160	125 … 370	320	1400 **1032***
125 ... 160	125 … 550	500	1400 **1050**
125 ... 160	125 … 850	750	1400 **1075**
200 … 250	135 … 265	200	1400 **1020**
200 … 250	135 … 315	250	1400 **1025**
200 … 250	135 … 385	320	1400 **1032***
200 … 250	135 … 565	500	1400 **1050**
200 … 250	135 … 880	750	1400 **1075**
315… 630	165 … 295	200	1400 **1020**
315… 630	165 … 345	250	1400 **1025**
315… 630	165 … 415	320	1400 **1032***
315… 630	165 … 595	500	1400 **1050**
315… 630	165 … 940	750	1400 **1075**
800 … 1800	221 … 343	200	1401 **1520**
800 … 1800	221 … 463	320	1401 **1532***
800 … 1800	221 … 543	400	1401 **1540**
2000 … 3200	415 … 570	200	2799 **3015**
2000 … 3200	415 … 690	320	2799 **3018***
2000 … 3200	415 … 820	450	2799 **3019**
4000	651 … 921	320	2799 **3018***

For 6/8 pole

Rating (A)	Dimension X (mm)	Shaft length (mm)	References
125 … 160	270 … 436	200	1400 **1020**
125 … 160	270 … 556	320	1400 **1032***
250	221 … 308	200	1401 **1520**
250	221 … 428	320	1401 **1532***
250	221 … 508	400	1401 **1540**
400 … 1600	298 … 385	200	1401 **1520**
400 … 1600	298 … 505	320	1401 **1532***

** Standard.*

This document is not a contract. SOCOMEC reserves the right to modify features without prior notice in view of continued improvement. 2008 - 2009

Accessories

Auxiliary contacts

acces_076_a_1_cat

Use

Pre-break and signalling of positions 0 and I:

- 1 to 2 NO/NC auxiliary contacts,
- 1 to 4 NO + NC auxiliary contacts,
- 1 to 2 low level NO/NC auxiliary contacts.

Characteristics

NO/NC AC: IP2 with front operation.

Connection to the control circuit

6.35 mm fast-on connection.

Electrical characteristics

30 000 operations.

References

NO/NC contacts for 3/4 pole

Rating (A)	No. of AC	References
125 … 3200	1st	2699 **0031**
125 … 3200	2nd	2699 **0032**
4000	1st	included
4000	2nd	included

NO/NC contacts for 6/8 pole

Rating (A)	No. of AC	References
125 … 1600	1st	2699 **0061**
125 … 1600	2nd	2699 **0062**

NO + NC contacts for 3/4 pole

Rating (A)	No. of AC	References
125 … 3200	1st	2699 **0141**
125 … 3200	2nd	2699 **0142**

Low level NO/NC contacts for 3/4 pole

Rating (A)	No. of AC	References
125 … 1800	1st	2699 **0301**
125 … 1800	2nd	2699 **0302**

Characteristics

Rating (A)	Contact type	Nominal current (A)	Operating current I_e (A) 230 VAC AC-12	230 VAC AC-13/15	400 VAC AC-12	400 VAC AC-13/15	24 VDC DC-12	24 VDC DC-13	24 VDC DC-14	48 VDC DC-12	48 VDC DC-13	48 VDC DC-14
125 … 4000	NO/NC	16	16	4	12	3	2.5	2.5	1	2.5	1.2	0.2
125 … 3200	NO+NC	16	16	4	16	3	16	5	1	2.5	1.2	0.2

Door mounting kit

Use

Kit enables door mounting facility for the SIRCO range.

References

For 3/4 pole direct front operation

Rating (A)	No. of poles	References
125 … 160	3 P	2699 **3312**
125 … 160	4 P	2699 **4312**
200 … 250	3 P	2699 **3420**
200 … 250	4 P	2699 **4420**

Terminal shrouds

acces_077_a_1_cat

Use

Top or bottom protection against direct contact with terminals or connection parts.

Advantage

Perforations allowing remote thermographic inspection without removal.

The terminal shrouds also provide phase separation SIRCOs from 125 to 630 A.

References

Rating (A)	No. of poles	Position	References
125 … 160	3/6 P	top or bottom	2694 **3014**(1)(2)
125 … 160	4/8 P	top or bottom	2694 **4014**(1)(2)
200 … 250	3/6 P	top or bottom	2694 **3021**(1)(2)
200 … 250	4/8 P	top or bottom	2694 **4021**(1)(2)
315 … 630	3/6 P	top or bottom	2694 **3051**(1)(2)
315 … 630	4/8 P	top or bottom	2694 **4051**(1)(2)

(1) 2 sets required to shroud top and bottom terminals on 3/4 pole switch.
(2) 4 sets required to shroud top and bottom terminals on 6/8 pole switch.

This document is not a contract. SOCOMEC reserves the right to modify features without prior notice in view of continued improvement. 2008 - 2009

Functions
References
Accessories
Enclosed load break switches
Characteristics
Dimensions

Accessories

Terminal screens

access_079_a_1_cat

Use
Top or bottom protection against direct contacts with terminals or connection parts.

References

For 3/4 pole

Rating (A)	No. of poles	Position	References
125 … 160	3 P	top or bottom	2698 **3012**(1)
125 … 160	4 P	top or bottom	2698 **4012**(1)
200 … 250	3 P	top or bottom	2698 **3020**(1)
200 … 250	4 P	top or bottom	2698 **4020**(1)
315 … 630	3 P	top or bottom	2698 **3050**(1)
315 … 630	4 P	top or bottom	2698 **4050**(1)
800 … CD 1250	3 P	top or bottom	2698 **3080**(1)
800 … CD 1250	4 P	top or bottom	2698 **4080**(1)
1250 … 1800	3 P	top or bottom	2698 **3120**(1)
1250 … 1800	4 P	top or bottom	2698 **4120**(1)
2000 … 3200	3 P	top or bottom	2698 **3200**(1)
2000 … 3200	4 P	top or bottom	2698 **4200**(1)
4000	3/4 P	top and bottom	included

(1) Order 2 references to shield top and bottom terminals.

For 6/8 pole

Rating (A)	No. of poles	Position	References
125 … 160	6 P	top or bottom	1509 **3012**
125 … 160	8 P	top or bottom	1509 **4012**
250	6 P	top or bottom	1509 **3025**
250	8 P	top or bottom	1509 **4025**
400 … 630	6 P	top or bottom	1509 **3063**
400 … 630	8 P	top or bottom	1509 **4063**
800 … 1250	6 P	top or bottom	1509 **3080**
800 … 1250	8 P	top or bottom	1509 **4080**
1600	6 P	top or bottom	1509 **3160**
1600	8 P	top or bottom	1509 **4160**

Shrouded distribution block

repar_027_a_2_cat

Use
Easy connection of several cables, can be clipped onto a symmetric DIN rail.

References

Rating (A)	No. of poles	No of feeders per section (mm²)	References
125	3/4 P	2 x 25 + 7 x 10	5420 **4108**
125	3/4 P	2 x 25 + 2 x 16 + 9 x 10	5420 **4112**
160	3/4 P	1 x 35 + 3 x 25 + 8 x 16	5420 **4016**

Bottom distribution kit

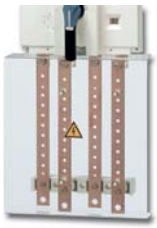

repar_020_b_1_cat

Use
Easy connection of several equipotential conductors, mounted top of the SIRCO.

References

Rating (A)	No. of poles	No of feeders per section (mm²)	References
125 … 160	3 P	1 x 95 + 8 x 25	5411 **3016**
125 … 160	4 P	1 x 95 + 8 x 25	5411 **4016**
200 … 250	3 P	1 x 150 + 8 x 50	5411 **3025**
200 … 250	4 P	1 x 150 + 8 x 50	5411 **4025**
315 … 400	3 P	1 x 240 + 8 x 95	5411 **3040**
315 … 400	4 P	1 x 240 + 8 x 95	5411 **4040**
500 … 630	3 P	1 x 300 + 8 x 150	5411 **3063**
500 … 630	4 P	1 x 300 + 8 x 150	5411 **4063**

This document is not a contract. SOCOMEC reserves the right to modify features without prior notice in view of continued improvement. 2008 - 2009

Accessories

Cage terminals

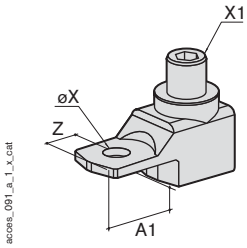

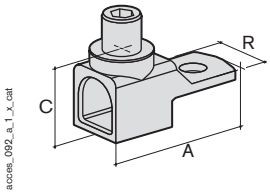

Use

Connection of bare copper cables onto the terminals (without terminal lugs).

References

Rating (A)	No. of poles	References
125 … 160	3 P	5400 **3016**
125 … 160	4 P	5400 **4016**
200 … 250	3 P	5400 **3025**
200 … 250	4 P	5400 **4025**
315 … 400	3 P	5400 **3040**
315 … 400	4 P	5400 **4040**
500 … 630	3 P	5400 **3063**
500 … 630	4 P	5400 **4063**

Connections

Rating (A)	Section flexible cable (mm²)	Section rigid cable (mm²)	Width flexible bar (mm)	Stripped over (mm)
125 … 160	16 … 95	16 … 95	13	22
200 … 250	16 … 185	16 … 185	18	27
315 … 400	50 … 240	50 … 300	20	34
500 … 630	70 … 300	70 … 300	24	34

Dimensions

Rating (A)	A	A1	C	R	ØX	X1	Z
125 … 160	47.5	22.5	25	20	8.5	M12	10
200 … 250	62	31.5	31.5	25	10.5	M16	14
315 … 400	71.5	32	38	32	10.5	M20	15
500 … 630	76.5	37	38	40	12.5	M20	15

Copper bars connection kits

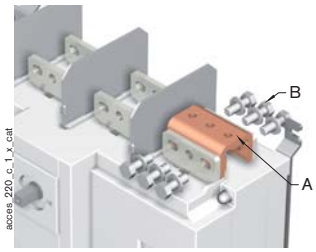

Fig.1

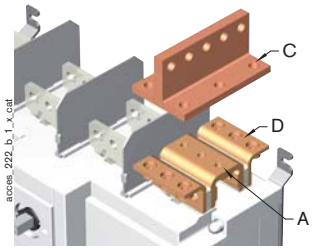

Fig.2

Use

To allow connection between the two power terminals from a same pole for 2000 to 3200 A ratings (Fig. 1 and Fig 2).

For 3200 A rating, the connection piece (part A) are delivered bridged from factory. Bolt sets must be ordered separately.

Dimensions

See page A.43, for connection kit assembly.

Technical notice for these specific accessories is downloadable from www.socomec.com

References

Top or bottom flat connection - Fig. 1

Rating (A)	Part	Qty to order per pole (1)	References
2000 … 2500	Connection piece - part A	1	2619 **1200**
2000 … 2500	Bolt set - part B	1	2699 **1200**
3200	Connection piece - part A	/	standard
3200	Bolt set - part B	1	2699 **1200**

(1) Example for 3-pole device: order 3 times the quantities.

Top or bottom edgewise connection - Fig. 2

Rating (A)	Part	Qty to order per pole (1)	References
2000 … 2500	Connection piece - part A	1	2619 **1200**
2000 … 2500	T piece - part C	1	2629 **1200** (2)
2000 … 2500	Right angle - part D	2	2639 **1200** (2)
3200	Connection piece - part A	/	standard
3200	T piece - part C	1	2629 **1200** (2)
3200	Right angle - part D	2	2639 **1200** (2)

(1) Example for 3-pole device equipped top only: order 3 times the quantities.
(2) Bolt set is provided with the accessories.

This document is not a contract. SOCOMEC reserves the right to modify features without prior notice in view of continued improvement. 2008 - 2009

Functions
References
Accessories
Enclosed load break switches
Characteristics
Dimensions

Accessories

Inter phase barriers

Use

Safety isolating separation between the terminals, essential for use at 690 VAC or in a polluted or dusty atmosphere.

The terminal shrouds also provide phase separation for SIRCOs from 125 to 630 A.

References

Rating (A)	No. of poles	References
125 … 160	3 P	2998 **0033**
125 … 160	4 P	2998 **0034**
200 … 250	3 P	2998 **0023**
200 … 250	4 P	2998 **0024**
315 … 630	3 P	2998 **0013**
315 … 630	4 P	2998 **0014**
800 … 3200	3/4 P	included

Handle key interlocking accessories

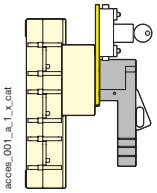

Fig. 1

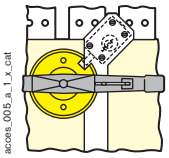

Fig. 2

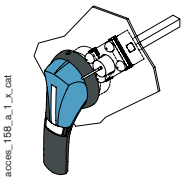

Fig. 3

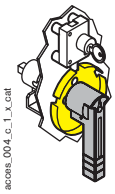

Fig. 4

Use

Locking in position 0 of the front operation handle:

- using a padlock (not supplied) and factory integrated into the handle. From 125 to 1800 A, the padlock on the external front operation handle also locks the door,
- using lock (not included): see diagrams opposite,
- using undervoltage coil: the SIRCO can only be closed if the coil is live.

For 6/8 pole, please consult us.

References

Locking using RONIS EL11AP lock (not included)

Rating (A)	No. of poles	Operation	Figure	References
125 … 630	3/4 P	direct front	1	2699 **6008**(1)
125 … 1800	3/4 P	external front	3	1499 **7701**
800 … 3200	3/4 P	direct front	2	2699 **6027**
2000 … 4000	3/4 P	external front	4	2799 **7002**
4000	3/4 P	direct front	2	2699 **7017**

Locking using CASTELL lock (not included)

Rating (A)	No. of poles	Operation	Lock type	Figure	References
125 … 1800	3/4 P	external front	FS	3	1499 **7703**
125 … 1800	3/4 P	external front	K	3	1499 **7702**
2000 … 4000	3/4 P	external front	K	2	2799 **7003**
125 … 160	6/8 P	external front	K	2	4109 **8507**
250 … 630	6/8 P	external front	K	2	2999 **8707**
800 … 1600	6/8 P	external front	K	2	2799 **7003**

Locking using 230 VAC undervoltage coil (other voltages: please consult us)

Rating (A)	No. of poles	Operation	References
125 … 630	3/4 P	external front	2699 **9063**(2)
800 … 3200	3/4 P	direct front	2699 **9315**(2)

(1) Front operation handle included.
(2) The locking system is mounted directly on the device.

This document is not a contract. SOCOMEC reserves the right to modify features without prior notice in view of continued improvement. 2008 - 2009

Accessories

Other specific accessories

bd_03_04_01

- Mechanical coupling device for making switches with “n” poles with the same or different ratings.
- Mechanical interlocking device.

Enclosed load break switches

Steel enclosure for front operation

coff_295_a_1_cat

General characteristics

- Adapted to mechanical risk and dust hazard.
- S-type black handle lockable in position 0.
- Protection degree: IP55 / Ik 10 (IP65 on request).
- Colour: polyester powder RAL 7032.
- Gland plates: top and bottom.
- Material: XC steel, thickness 1.5 to 2 mm.
- Coating: epoxy polyester powder.
- Wall mounting: 4 holes in the back of the casing.
- Door: solid with hinges.
- Locking system: 3 mm double-bar key (key supplied).
- Miscellaneous: 2 earth connection points, disconnectable solid neutral link for 3+N, extension boxes for top and/or bottom connections available, IP20 incoming terminal shrouds.

Please consult us.

This document is not a contract. SOCOMEC reserves the right to modify features without prior notice in view of continued improvement. 2008 - 2009

SIRCO
125 to 4000 A

Functions
References
Accessories
Enclosed load break switches
Characteristics
Dimensions

Enclosed load break switches

Polyester enclosure for front operation

Functions
- Emergency breaking.
- Breaking for mechanical maintenance.
- Safety isolation in the vicinity of any low voltage final circuit.

Conformity to standards
- IEC 60364
- EN 60204-1
- EN 60439
- EN 60695-2-11

General characteristics
- Adapted to chemical attack, dust hazard, contamination hazard and atmospheric corrosion.
- S-type black handle lockable in position 0.
- Protection degree: IP55 (IP65 on request).
- Colour: RAL 7030.
- Gland plates: none.
- Material: glass fibre reinforced polyester.
- Coating: none.
- Wall mounting: 4 fixing lugs supplied, not mounted.
- Locking system: screws.
- Miscellaneous: high comparative tracking index, high resistance to chemicals, self-extinguishing at 960°C, 2 earth connection points, connection on top switch via a set of descending bars.

Accessories
- Auxiliary contacts (see page A.33).
- Terminal shrouds (see page A.33).

Connection

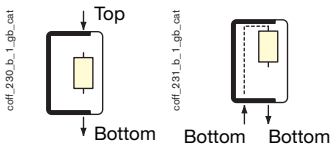

References (1)(2)

Rating (A)	No. of poles	Reference	Reference
125	3 P	3115 **3012**	3125 **3012**
125	4 P	3115 **4012**	3125 **4012**
160	3 P	3115 **3016**	3125 **3016**
160	4 P	3115 **4016**	3125 **4016**
250	3 P	3115 **3025**	3125 **3025**
250	4 P	3115 **4025**	3125 **4025**
400	3 P	3115 **3040**	3125 **3040**
400	4 P	3115 **4040**	3125 **4040**
500	3 P	3115 **3050**	3125 **3050**
500	4 P	3115 **4050**	3125 **4050**

(1) Combined fuse version: please consult us.
(2) For rating 16 to 100 A, see page A.18 "SIRCO M & MV".

Connection

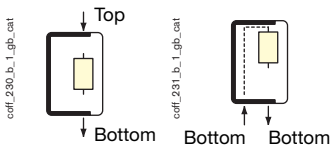

Dimensions

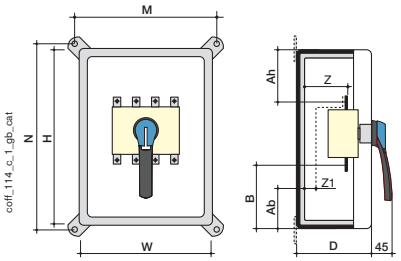

Rating (A)	No. of poles	H x W x D (mm)	Max. connection section (mm²)	M	N	Z	Z1	Ah	B	Weight (kg)	Ab	B	Weight (kg)
125	3/4 P	360 x 270 x 171	50	271	361	33	-	120	126	5	-	-	*
125	3/4 P	360 x 270 x 201	50	271	361	62	28	-	-	-	166	205	6
160	3/4 P	360 x 270 x 171	95	271	361	33	-	120	126	5	-	-	*
160	3/4 P	360 x 270 x 201	95	271	361	62	28	-	-	-	166	205	6
250	3/4 P	540 x 360 x 171	150	361	541	35	-	200	210	8	-	-	*
250	3/4 P	540 x 360 x 201	150	361	541	55	25	-	-	-	279	360	10
400	3/4 P	720 x 540 x 201	240	541	721	42	-	258	258	18	316	433	23
500	3/4 P	720 x 540 x 201	240	541	721	51	38	258	258	18	316	433	24

** Please consult us.*

This document is not a contract. SOCOMEC reserves the right to modify features without prior notice in view of continued improvement. 2008 - 2009

Characteristics (according to IEC 60947-3)

Thermal current I_{th} (40°C)		125 A	160 A	200 A	250 A	315 A	400 A	500 A	630 A	800 A
Rated insulation voltage U_i (V)		800	800	800	800	1000	1000	1000	1000	1000
Rated impulse withstand voltages U_{imp} (kV)		8	8	8	8	12	12	12	12	12
Rated operational currents I_e (A)										
Rated voltage	Load duty category	A/B (1)	A/B (1)	A/B (1)	A/B (1)	A/B (1)	A/B (1)	A/B (1)	A/B (1)	A/B (1)
400 VAC	AC-21 A / AC-21 B	125/125	160/160	200/200	250/250	315/315	400/400	500/500	630/630	800/800
	AC-22 A / AC-22 B	125/125	160/160	200/200	250/250	315/315	400/400	500/500	630/630	800/800
	AC-23 A / AC-23 B	125/125	160/160	200/200	250/250	315/315	400/400	500/500	500/500	800/800
500 VAC	AC-21 A / AC-21 B	125/125	160/160	200/200	250/250	315/315	400/400	500/500	630/630	800/800
	AC-22 A / AC-22 B	125/125	125/125	200/200	250/250	315/315	400/400	400/400	500/500	800/800
	AC-23 A / AC-23 B	100/100	100/100	160/200	200/250	315/315	315/315	315/315	315/315	630/800
690 VAC (2)	AC-20 A / AC-20 B	125/125	160/160	200/200	250/250	315/315	400/400	500/500	630/630	800/800
	AC-21 A / AC-21 B	125/125	160/160	160/200	200/250	315/315	400/400	400/400	500/500	800/800
	AC-22 A / AC-22 B	125/125	125/125	125/160	125/160	250/315	250/315	250/315	315/315	800/800
	AC-23 A / AC-23 B	63/80	63/80	80/100	100/125	160/200	160/200	160/200	160/200	200/250
220 VDC	DC-20 A / DC-20 B	125/125	160/160	200/200	250/250	315/315	400/400	500/500	630/630	800/800
	DC-21 A / DC-21 B	125/125	160/160	160/200	250/250	315/315	400/400	500/500	630/630	800/800
	DC-22 A / DC-22 B	125/125	160/160	160/200	250/250	315/315	400/400	400/500	500/500	800/800
	DC-23 A / DC-23 B	125/125	125/125	160/160	200/200	315/315	400/400	400/400	500/500	800/800
440 VDC	DC-20 A / DC-20 B	125/125	160/160	200/200	250/250	315/315	400/400	500/500	630/630	800/800
	DC-21 A / DC-21 B	125(4)/125(4)	160(4)/160(4)	160(4)/200(4)	200(4)/200(4)	315(4)/315(4)	400(4)/400(4)	400(4)/500(4)	500(4)/500(4)	800(3)/800(3)
	DC-22 A / DC-22 B	125(4)/125(4)	125(4)/125(4)	160(4)/160(4)	200(4)/200(4)	315(4)/315(4)	400(4)/400(4)	400(4)/400(4)	500(4)/500(4)	800(3)/800(3)
	DC-23 A / DC-23 B	125(3)/125(3)	125(3)/125(3)	160(3)/160(3)	200(3)/200(3)	315(3)/315(3)	400(3)/400(3)	400(3)/400(3)	500(3)/500(3)	800(3)/800(3)
500 VDC	DC-20 A / DC-20 B	125/125	160/160	200/200	250/250	315/315	400/400	500/500	630/630	800/800
	DC-21 A / DC-21 B	125(4)/125(4)	125(4)/125(4)	160(4)/200(4)	200(4)/200(4)	315(4)/315(4)	400(4)/400(4)	400(4)/400(4)	500(4)/500(4)	800(3)/800(3)
	DC-22 A / DC-22 B	125(3)/125(3)	125(3)/125(3)	160(3)/160(3)	200(3)/200(3)	315(3)/315(3)	315(3)/400(3)	315(3)/400(3)	500(3)/500(3)	800(3)/800(3)
	DC-23 A / DC-23 B	125(3)/125(3)	125(3)/125(3)	160(3)/160(3)	200(3)/200(3)	315(3)/315(3)	315(3)/400(3)	315(3)/400(3)	500(3)/500(3)	800(3)/800(3)
Operational power in AC-23 (kW)(1)(5)										
At 400 VAC without pre-break AC		63/63	80/80	100/100	132/132	160/160	220/220	280/280	280/280	450/450
At 500 VAC without pre-break AC		63/63	63/63	110/140	140/160	220/220	220/220	220/220	220/220	450/560
At 690 VAC without pre-break AC		55/75	55/75	75/90	90/110	150/185	150/185	150/185	150/185	185/220
Reactive power (kvar)(5)										
At 400 VAC		55	75	90	115	145	185	230	290	365
Fuse protected short-circuit withstand (6)										
Prospective short-circuit (kA rms)		100	100	80	50	100	100	100	70	50
Associated fuse rating (A)		125	160	200	250	315	400	500	630	800
Overload capacity										
Rated short-time withstand current 0,3 s. I_{cw} (kA rms)		15	15	17	17	25	25	25	25	50
Rated peak withstand current (kA peak)(6)		20	20	30	30	45	45	45	45	55
Connection										
Minimum Cu cable section (mm²)		35	50	70	95	150	185	240	2 x 150	2 x 185
Minimum Cu busbar section (mm²)		-	-	-	-	-	-	-	2 x 30 x 5	2 x 40 x 5
Maximum Cu cable section (mm²)		50	95	95	150	240	240	240	2 x 300	2 x 300
Maximum Cu busbar width (mm)		25	25	32	32	40	40	40	50	63
Min. tightening torque (Nm)		9	9	20	20	20	20	20	40	-
Mechanical characteristics										
Endurance (number of operating cycles)		10 000	10 000	10 000	10 000	5 000	5 000	5 000	5 000	3000
Operating effort (Nm)		6.5	6.5	10	10	14.5	14.5	14.5	14.5	37
Weight of 3 P switch (kg)		1	1.5	2	2	3.5	3.5	3.5	3.5	8
Weight of 4 P switch (kg)		1.5	1.5	2	2	4	4	4.5	4.5	10

(1) A/B: Category with index A = frequent operation - Category with index B = infrequent operation. (2) With terminal shrouds or phase barrier. (3) 4-pole device with 2 pole in series by polarity. (4) 3-pole device with 2 pole in series for the + and 1 pole for the -. (5) The power value is given for information only, the current values vary from one manufacturer to another. (6) For a rated operating voltage U_e = 400 VAC.

This document is not a contract. SOCOMEC reserves the right to modify features without prior notice in view of continued improvement. 2008 - 2009

SIRCO
125 to 4000 A

Characteristics (according to IEC 60947-3)

Thermal current I_{th} (40°C)		1000 A	CD 1250 A	1250 A	1600 A	1800 A	2000 A	2500 A	3200 A	4000 A
Rated insulation voltage U_i (V)		1000	1000	1000	1000	1000	1000	1000	1000	1000
Rated impulse withstand voltages U_{imp} (kV)		12	12	12	12	12	12	12	12	12
Rated operational currents I_e (A)										
Rated voltage	Load duty category	A/B (1)	A/B (1)	A/B (1)	A/B (1)	A/B (1)	A/B (1)	A/B (1)	A/B (1)	A/B (1)
400 VAC	AC-21 A / AC-21 B	1000/1000	1250/1250	1250/1250	1600/1600	1800/1800	2000/2000	2500/2500	3200/3200	3200/3200
	AC-22 A / AC-22 B	1000/1000	1250/1250	1250/1250	1600/1600	1800/1800	2000/2000	2000/2500	2500/3200	2500/2500
	AC-23 A / AC-23 B	1000/1000	1250/1250	1250/1250	1250/1250	1250/1250	1600/1600	1600/1600	1600/1600	1250/1250
500 VAC	AC-21 A / AC-21 B	800/800	800/800	1250/1250	1600/1600	1600/1600	2000/2000	2500/2500	3200/3200	3200/3200
	AC-22 A / AC-22 B	800/800	800/800	1250/1250	1250/1250	1250/1250	1600/2000	1600/2000	2000/2000	2000/2000
	AC-23 A / AC-23 B	630/800	630/800	1000/1000	1000/1000	1000/1000	1000/1000	1000/1000	1000/1000	1000/1000
690 VAC (2)	AC-20 A / AC-20 B	1000/1000	1250/1250	1250/1250	1600/1600	1800/1800	2000/2000	2500/2500	3200/3200	4000/4000
	AC-21 A / AC-21 B	800/800	800/800	1000/1000	1000/1000	1000/1000	2000/2000	2000/2500	2000/2500	2000/2500
	AC-22 A / AC-22 B	800/800	800/800	1000/1000	1000/1000	1000/1000	1000/1000	1000/1000	1000/1000	1000/1000
	AC-23 A / AC-23 B	200/250	200/250	500/500	500/500	500/500	800/800	800/800	800/800	800/800
220 VDC	DC-20 A / DC-20 B	1000/1000	1250/1250	1250/1250	1600/1600	1800/1800	2000/2000	2500/2500	3200/3200	4000/4000
	DC-21 A / DC-21 B	1000/1000	1250/1250	1250/1250	1250/1250	1250/1250	2000/2000	2000/2500	2000/2500	2000/2500
	DC-22 A / DC-22 B	1000/1000	1250/1250	1250/1250	1250/1250	1250/1250	1250/1600	1250/1600	1250/1600	1250/1600
	DC-23 A / DC-23 B	1000/1000	1250/1250	1250/1250	1250/1250	1250/1250	1250(3)/1250(3)	1250(3)/1250(3)	1250(3)/1250(3)	1250/1250
440 VDC	DC-20 A / DC-20 B	1000/1000	1250/1250	1250/1250	1600/1600	1800/1800	2000/2000	2500/2500	3200/3200	4000/4000
	DC-21 A / DC-21 B	1000(3)/1000(3)	1250(3)/1250(3)	1250(3)/1250(3)	1250(3)/1250(3)	1250(3)/1250(3)	2000/2000	2000/2000	2000/2000	2000/2000
	DC-22 A / DC-22 B	1000(3)/1000(3)	1250(3)/1250(3)	1250(3)/1250(3)	1250(3)/1250(3)	1250(3)/1250(3)	1250(3)/1250(3)	1250(3)/1250(3)	1250(3)/1250(3)	1250/1250
	DC-23 A / DC-23 B	1000(3)/1000(3)	1250(3)/1250(3)	1250(3)/1250(3)	1250(3)/1250(3)	1250(3)/1250(3)	1000(3)/1000(3)	1000(3)/1000(3)	1000(3)/1000(3)	1000(3)/1000(3)
500 VDC	DC-20 A / DC-20 B	1000/1000	1250/1250	1250/1250	1600/1600	1800/1800	2000/2000	2500/2500	3200/3200	4000/4000
	DC-21 A / DC-21 B	1000(3)/1000(3)	1250(3)/1250(3)	1250(3)/1250(3)	1250(3)/1250(3)	1250(3)/1250(3)	1250/1250	1250/1250	1250/1250	1250/1250
	DC-22 A / DC-22 B	1000(3)/1000(3)	1250(3)/1250(3)	1250(3)/1250(3)	1250(3)/1250(3)	1250(3)/1250(3)	1250(3)/1250(3)	1250(3)/1250(3)	1250(3)/1250(3)	1250(3)/1250(3)
	DC-23 A / DC-23 B	1000(3)/1000(3)	1250(3)/1250(3)	1250(3)/1250(3)	1250(3)/1250(3)	1250(3)/1250(3)	1000(3)/1000(3)	1000(3)/1000(3)	1000(3)/1000(3)	1000(3)/1000(3)
Operational power in AC-23 (kW)(1)(5)										
At 400 VAC without pre-break AC		560/560	710/710	710/710	710/710	710/710	710/710	710/710	710/710	710/710
At 500 VAC without pre-break AC		450/560	450/560	710/710	710/710	710/710	710/710	710/710	710/710	710/710
At 690 VAC without pre-break AC		185/220	185/220	475/475	475/475	475/475	750/750	750/750	750/750	750/750
Reactive power (kvar)(5)										
At 400 VAC		460	575	575	-	-	-	-	-	-
Fuse protected short-circuit withstand (6)										
Prospective short-circuit (kA rms)		100	100	100	100	100	100	100	-	-
Associated fuse rating (A)		1000	1250	1250	2 x 800	2 x 800	2 x 1000	2 x 1250	-	-
Overload capacity										
Rated short-time withstand current 0,3 s I_{cw} (kA rms)		65	65	100	100	100	100	100	110	110
Rated peak withstand current (kA peak)(6)		80	80	110	110	110	110	110	120	150
Connection										
Minimum Cu cable section (mm²)		2 x 240	-	-	-	-	-	-	-	-
Minimum Cu busbar section (mm²)		2 x 50 x 5	2 x 60 x 5	2 x 60 x 5	2 x 80 x 5	3 x 100 x 5	3 x 100 x 5	4 x 100 x 5	4 x 100 x 5	4 x 100 x 10
Maximum Cu cable section (mm²)		4 x 185	4 x 185	4 x 185	6 x 185	6 x 185	-	-	-	-
Maximum Cu busbar width (mm)		63	63	100	100	100	125	125	125	125
Min. tightening torque (Nm)		-	-	40	40	40	40	40	40	40
Mechanical characteristics										
Endurance (number of operating cycles)		3 000	3 000	4 000	4 000	4 000	3 000	3 000	3 000	2 500
Operating effort (Nm)		37	37	56	56	56	75	75	75	110
Weight of 3 P switch (kg)		8	8	12	12	12	22	22	22	90
Weight of 4 P switch (kg)		10	10	15	15	15	25	25	25	102

(1) A/B: Category with index A = frequent operation - Category with index B = infrequent operation. (2) With terminal shrouds or phase barrier. (3) 4-pole device with 2 pole in series by polarity. (4) 3-pole device with 2 pole in series for the + and 1 pole for the -. (5) The power value is given for information only, the current values vary from one manufacturer to another. (6) For a rated operating voltage U_e = 400 VAC.

This document is not a contract. SOCOMEC reserves the right to modify features without prior notice in view of continued improvement. 2008 - 2009

Dimensions

Front operation

• SIRCO 125 to 630 A

Direct front operation

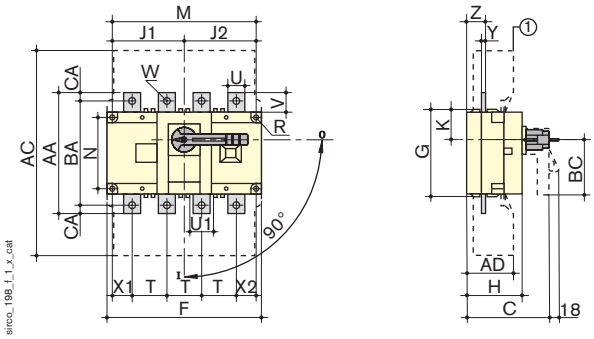

1. Terminal shrouds

External front operation

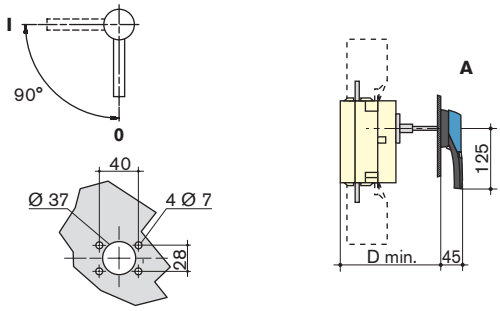

A. S2 type handle

Rating	Overall dimensions		Terminal shrouds		Switch body									Switch mounting				Connection terminals												
(A)	C	D min.	AC	AD	F 3p.	F 4p.	G	H	J1 3p.	J1 4p.	J2	K	BC	M 3p.	M 4p.	N	R	T	U	U1	V	W	X1 3p.	X1 4p.	X2	Y	Z	AA	BA	CA
125	115	125	235	50	140	170	93	65	45	75	75	31.5	80	120	150	65	5.5	36	20	20.5	25	9	28	22	20	3.5	20.5	135	115	10
160	115	125	235	50	140	170	93	65	45	75	75	31.5	80	120	150	65	5.5	36	20	20.5	25	9	28	22	20	3.5	20.5	135	115	10
200	125	135	280	60	180	230	108	75	55	105	105	34	115	160	210	80	5.5	50	25	25.5	30	11	33	33	27	3.5	22.5	160	130	15
250	125	135	280	60	180	230	108	75	55	105	105	34	115	160	210	80	5.5	50	25	25.5	30	11	33	33	27	3.5	22.5	160	130	15
315	160	165	401	89	230	290	170	110	75	135	135	55	115	210	270	140	7	65	32	45.5	37.5	11	42.5	37.5	37.5	5	36	235	205	15
400	160	165	401	89	230	290	170	110	75	135	135	55	115	210	270	140	7	65	32	45.5	37.5	11	42.5	37.5	37.5	5	36	235	205	15
500	160	165	401	89	230	290	170	110	75	135	135	55	115	210	270	140	7	65	32	45.5	37.5	13	42.5	37.5	37.5	5	36	235	205	15
630	160	165	400	89	230	290	170	110	75	135	135	55	115	210	270	140	7	65	45	45.5	50	13	42.5	37.5	37.5	5	36	260	220	20

• SIRCO 800 to 1800 A

Direct front operation

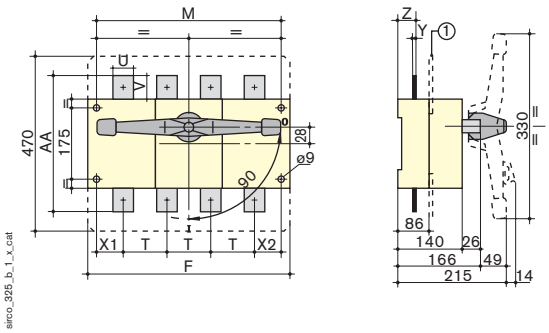

1. Terminal screens

External front operation

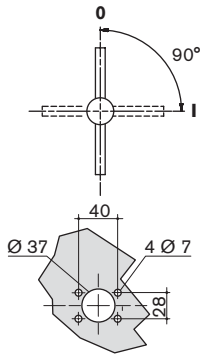

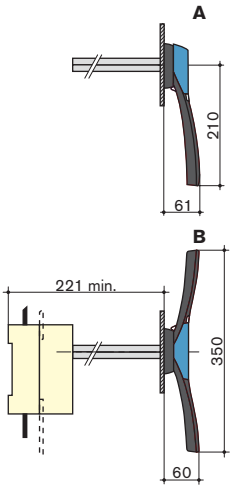

A. Handle single lever S3 type
B. Handle double lever S4 type

Rating	Switch body		Switch mounting		Connection terminals							
(A)	F 3p.	F 4p.	M 3p.	M 4p.	T	U	V	Y	X1	X2	Z	AA
800	280	360	255	335	80	50	60.5	7	47.5	47.5	46.5	321
1000	280	360	255	335	80	50	60.5	7	47.5	47.5	46.5	321
CD 1250	280	360	255	335	80	60	65	7	47.5	47.5	46.5	330
1250	372	492	347	467	120	90	44	8	53.5	53.5	47.5	288
1600	372	492	347	467	120	90	44	8	53.5	53.5	47.5	288
1800	372	492	347	467	120	90	44	8	53.5	53.5	47.5	288

This document is not a contract. SOCOMEC reserves the right to modify features without prior notice in view of continued improvement. 2008 - 2009

SIRCO
125 to 4000 A

Functions
References
Accessories
Enclosed load break switches
Characteristics
Dimensions

Dimensions

Front operation

• SIRCO 2000 to 3200 A

Direct front operation

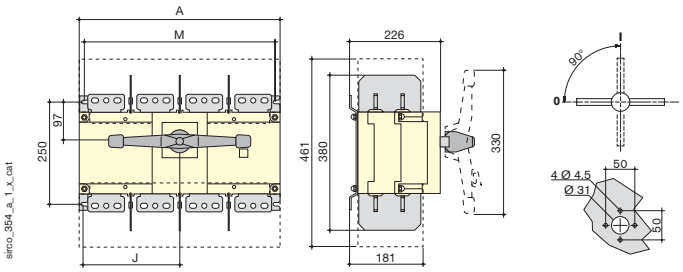

Rating (A)	Overall dimensions A 3p.	A 4p.	Switch body J 3p.	J 4p.	Switch mounting M 3p.	M 4p.
2000 ... 3200	372	492	173.5	233.5	347	467

• SIRCO 4000 A

Direct front operation

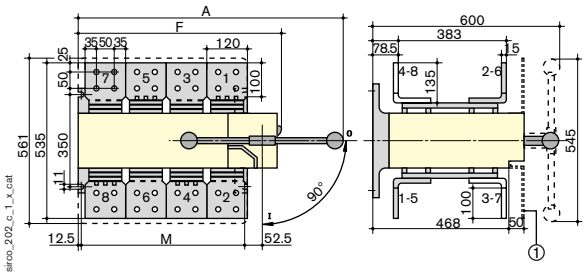

External front operation

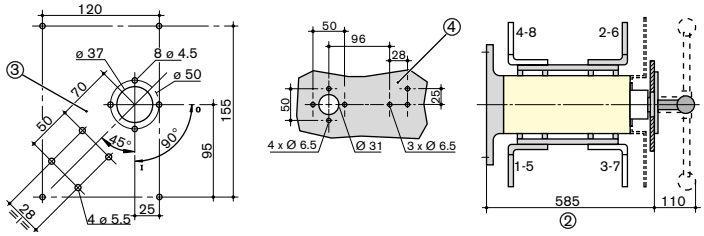

1. Terminal screens
2. Min. length with coupling part for shaft extension (shaft 40 mm): 635 mm
3. Door drilling with RONIS EL11AP lock
4. Door drilling with CASTELL K lock

Rating (A)	Overall dimensions A 3p.	A 4p.	Switch body F 3p.	F 4p.	Switch mounting M 3p.	M 4p.
4000	684	804	470	590	347	467

This document is not a contract. SOCOMEC reserves the right to modify features without prior notice in view of continued improvement. 2008 - 2009

Dimensions

Connection terminals

• SIRCO 800 to 1000 A

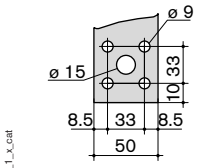

• SIRCO CD 1250 A

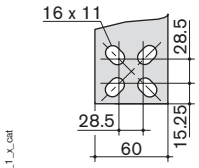

• SIRCO 1250 to 3200 A

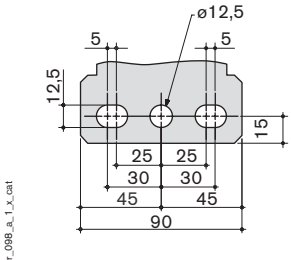

• SIRCO 4000 A

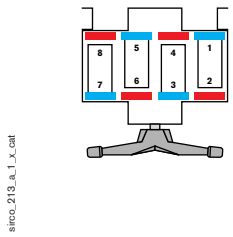

Top terminals

Bottom terminals

Note: Screws and bolts not suitable for SIRCO 800 to 4000 A ratings.

Copper bars connection kits

• Fig. 1

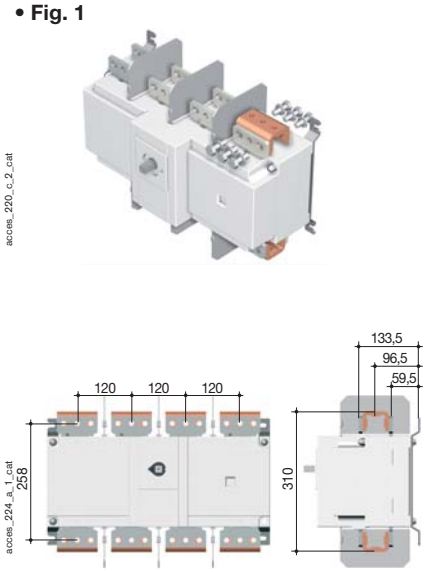

• Fig. 2

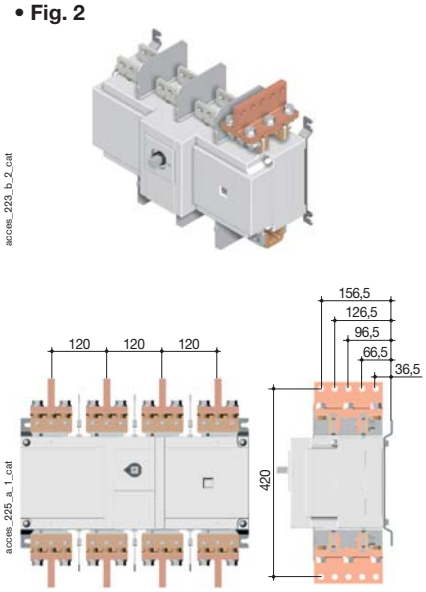

Door drilling

• With RONIS EL11AP lock

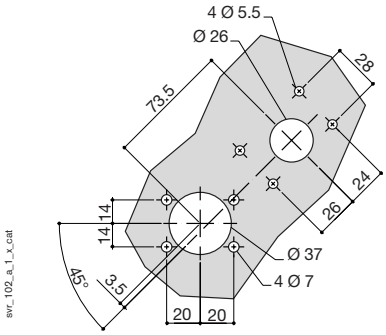

• With CASTELL K lock for SIRCO 125 to 1800 A

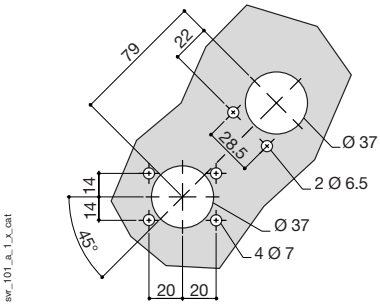

• With CASTELL K lock for SIRCO 2000 to 3200 A

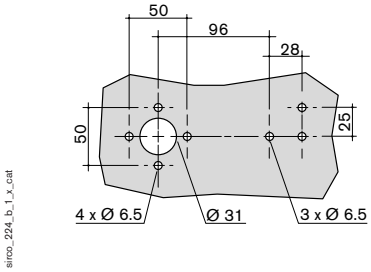

This document is not a contract. SOCOMEC reserves the right to modify features without prior notice in view of continued improvement. 2008 - 2009

SIRCO High Withstand

2000 to 3200 A

Functions
References
Characteristics
Dimensions

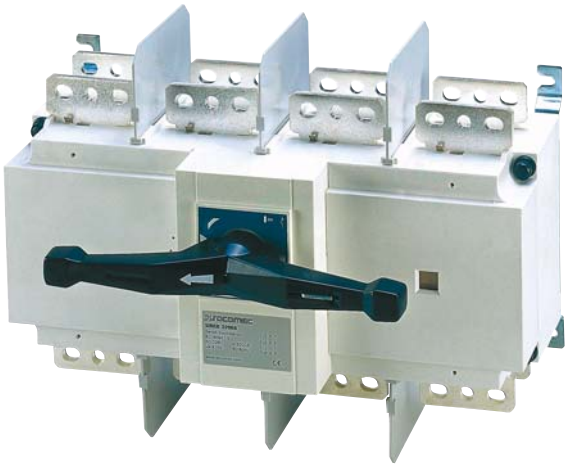

sirco_353_a_1_cat

Functions

SIRCO HW are load break switches especially developed for the networks with high short circuit current.

They break on and off under load and provide safety isolation for low voltage circuit.

Conformity to standards

- IEC 60947-3
- EN 60947-3
- VDE 0660-107 (1992)
- NBN EN 60947-3
- BS EN 60947-3

General characteristics

- Fully visible breaking.
- High thermal and dynamic withstand: 80 kA 1s, 110 kA 0.1 s, 240 kA peak.
- Arduous utilisation categories (AC-22 and AC-23).
- Good electrical and mechanical endurance.
- High resistance to humidity (supplied “tropicalised”).

This document is not a contract. SOCOMEC reserves the right to modify features without prior notice in view of continued improvement. 2008 - 2009

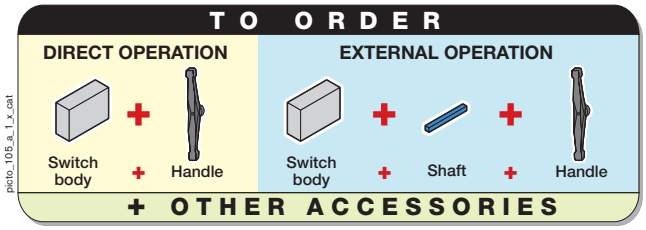

References

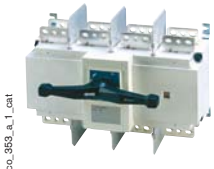

Rating (A)	No. of pole	Switch body	Direct front handle	Door interlocked external front handle	Shaft extensions for external handle
2000	3 P	26HW **3200**	Black 2799 **7012** Red 2799 **7013**	Black 2799 **7136** Red 2799 **7134**	200 mm 2799 **3015** 320 mm 2799 **3018** 450 mm 2799 **3019**
	4 P	26HW **4200**			
2500	3 P	26HW **3250**			
	4 P	26HW **4250**			
3200	3 P	26HW **3320**			
	4 P	26HW **4320**			

+ ADDITIONAL ACCESSORIES

Rating (A)	Auxiliary contacts	Terminal screens(1)	Inter phase barriers	Handle key interlocking accessories - Direct front operation
2000	1st AC NO/NC changeover 3/4 P 2699 **0031** 2nd AC NO/NC changeover 3/4 P 2699 **0032**	3 P 2698 **3200** 4 P 2698 **4200**	standard	Locking using lock 2699 **6027**(2) Locking by undervoltage AC trip coil 230 VAC 2699 **9315**
2500				
3200				

(1) Top / Bottom.
(2) Lock not included.

Other accessories: see "SIRCO" page A.26

This document is not a contract. SOCOMEC reserves the right to modify features without prior notice in view of continued improvement. 2008 - 2009

SIRCO High Withstand

2000 to 3200 A

Characteristics (according to IEC 60947-3)

Thermal current I_{th} (40°C)		2000 A	2500 A	3200 A
Rated insulation voltage U_i (V)		1000	1000	1000
Rated impulse withstand voltage U_{imp} (kV)		12	12	12
Rated operational currents I_e (A)				
Rated voltage	Load duty category	A/B (1)	A/B (1)	A/B (1)
400 VAC	AC-21 A / AC-21 B	2000/2000	2500/2500	3200/3200
	AC-22 A / AC-22 B	2000/2000	2000/2500	2500/2500
	AC-23 A / AC-23 B	1250/1250	1250/1250	1250/1250
500 VAC	AC-21 A / AC-21 B	2000/2000	2500/2500	3200/3200
	AC-22 A / AC-22 B	1600/2000	1600/2000	2000/2000
	AC-23 A / AC-23 B	1000/1000	1000/1000	1000/1000
690 VAC (2)	AC-20 A / AC-20 B	2000/2000	2500/2500	3200/3200
	AC-21 A / AC-21 B	2000/2000	2000/2500	2000/2500
	AC-22 A / AC-22 B	1000/1000	1000/1000	1000/1000
	AC-23 A / AC-23 B	800/800	800/800	800/800
220 VDC	DC-20 A / DC-20 B	2000/2000	2500/2500	3200/3200
	DC-21 A / DC-21 B	2000/2000	2000/2500	2000/2500
	DC-22 A / DC-22 B	1250/1600	1250/1600	1250/1600
	DC-23 A / DC-23 B	1250/1250	1250/1250	1250/1250
400 VDC	DC-20 A / DC-20 B	2000/2000	2500/2500	3200/3200
	DC-21 A / DC-21 B	2000/2000	2000/2000	2000/2000
	DC-22 A / DC-22 B	1250/1250	1250/1250	1250/1250
	DC-23 A / DC-23 B	1000(3)/1000(3)	1000(3)/1000(3)	1000(3)/1000(3)
500 VDC	DC-20 A / DC-20 B	2000/2000	2500/2500	3200/3200
	DC-21 A / DC-21 B	1250/1250	1250/1250	1250/1250
	DC-22 A / DC-22 B	1250(3)/1250(3)	1250(3)/1250(3)	1250(3)/1250(3)
	DC-23 A / DC-23 B	1000(3)/1000(3)	1000(3)/1000(3)	1000(3)/1000(3)
Operational power in AC-23 (kW)(1)(4)		A/B	A/B	A/B
At 400 VAC without pre-break AC		710/710	710/710	710/710
At 500 VAC without pre-break AC		710/710	710/710	710/710
At 690 VAC without pre-break AC		750/750	750/750	750/750
Fuse protected short-circuit withstand (kA rms prospective)(5)				
Prospective short-circuit (kA rms)		100	100	-
Associated fuse rating (A)		2 x 1000	2 x 1250	-
Overload capacity				
Rated short-time withstand current 1s I_{cw} (kA rms)		80	80	80
Rated short-time withstand current 0.1s I_{cw} (kA rms)		110	110	110
Rated peak withstand current (kA peak)(5)		230	230	230
Connection				
Minimum Cu busbar section (mm²)		3 x 100 x 5	4 x 100 x 5	4 x 100 x 5
Maximum Cu busbar width (mm)		125	125	125
Min. tightening torque(Nm)		40	40	40
Mechanical characteristics				
Endurance (number of operating cycles)		3000	2500	2500
Operating effort (Nm)		60	60	60
Weight of 3 P switch (kg)		31	32	42
Weight of 4 P switch (kg)		40	40	49

(1) A/B: Category with index A= frequent operation - Category with index B= infresuent operation. (2) With terminal shrouds or phase barrier. - (3) 4-pole device with 2 pole in series by polarity. (4) The power value is given for the information only, the current values vary from one manufacturer to another. (5) For a rated operating voltage U_e= 400 VAC.

This document is not a contract. SOCOMEC reserves the right to modify features without prior notice in view of continued improvement. 2008 - 2009

Dimensions

• SIRCO 2000 to 3200 A

Direct front operation

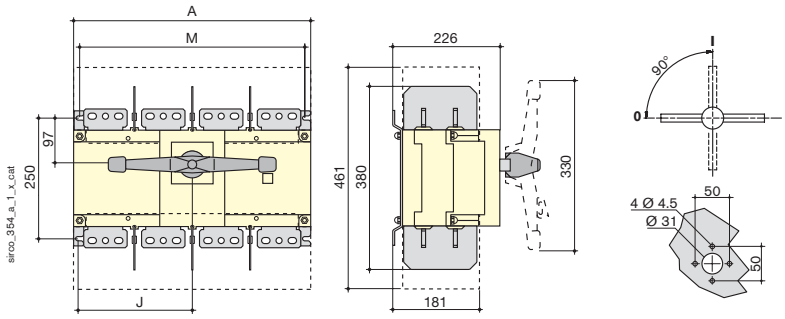

Rating (A)	Overall dimensions A 3p.	A 4p.	Switch body J 3p.	J 4p.	Switch mounting M 3p.	M 4p.
2000 ... 3200	372	492	173.5	233.5	347	467

Connection terminals

• 2000 to 3200 A

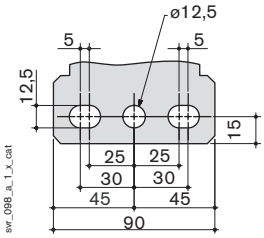

Door drilling

• With RONIS EL11 AP lock

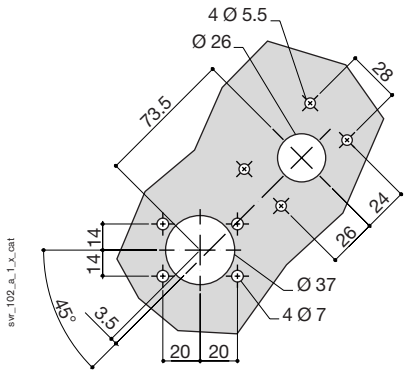

• With CASTELL K lock

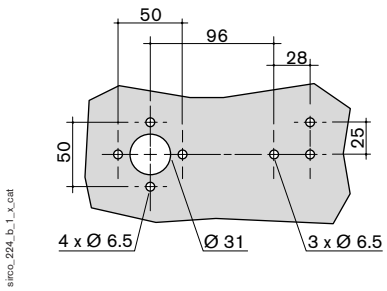

This document is not a contract. SOCOMEC reserves the right to modify features without prior notice in view of continued improvement. 2008 - 2009

SIDER
125 to 1600 A

Functions
References
Accessories
Characteristics
Dimensions

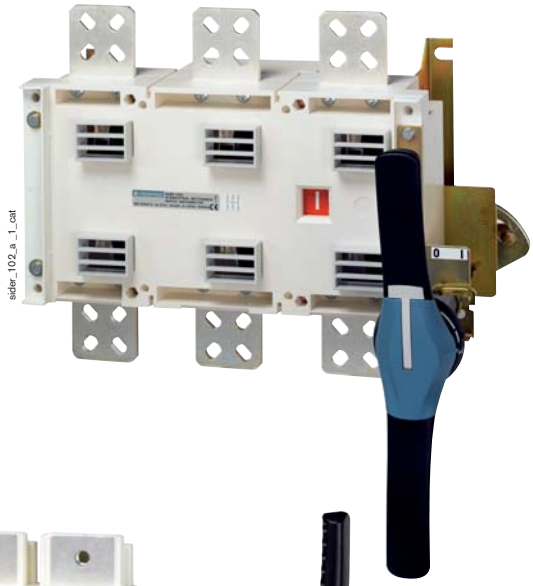

Functions

SIDER are manually operated tri- or tetrapolar load break switches
They break on and off under load and provide safety isolation for any low voltage electric circuit.

Conformity to standards

- IEC 60947-3
- EN 60947-3
- VDE 0660-107 (1992)
- NBN EN 60947-3
- BS EN 60947-3

Approvals and certifications

- Bureau Véritas
- CEBEC (Belgique)
- PSA E03.15.605.G
- RENAULT EB03.15.613

General characteristics

- Fully visible breaking.
- Visible double breaking.

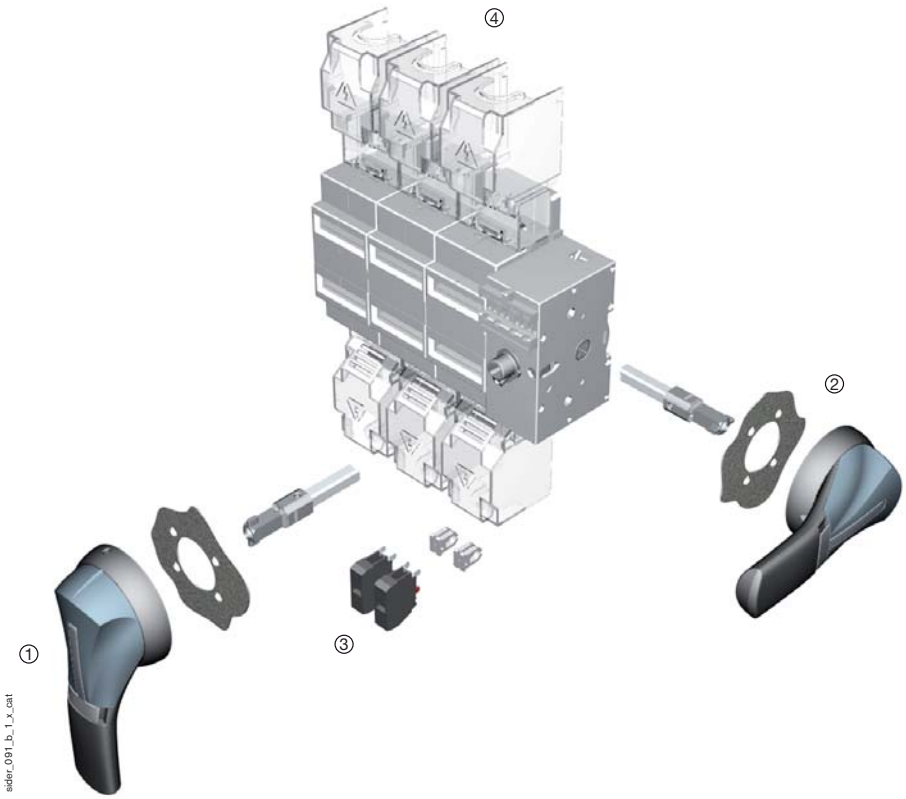

Overview (for further details, please see the installation instructions supplied with each device).

1. Direct front handle.
2. Door interlocked external front handle.
3. 2x2 configurable U type ACs, for pre-break and signalling or TEST.
4. Terminal shrouds.

This document is not a contract. SOCOMEC reserves the right to modify features without prior notice in view of continued improvement. 2008 - 2009

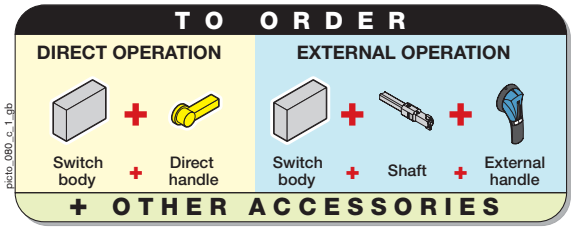

References

Front operation

Rating (A)	No. of poles	Switch body only - Direct operation	Switch body only - External operation	Direct handle	Door interlocked external handle	Shaft extensions for external handle	Auxiliary contacts[1]
ND 125	3 P	2915 **3012**	2921 **3012**	Black* 3629 **7901**	S2 type Black IP55* 1421 **2111** Black IP65 1423 **2111** Red IP65 1424 **2111**	200 mm 1400 **1020** 320 mm* 1400 **1032** 500 mm 1400 **1050**	1st contact NO/NC 3999 **0021**[2] 2 contact NO/NC 3999 **0022**[2] 1 contact NC 3999 **0701**[3] 1 contact NO 3999 **0702**[3]
	4 P	2915 **4012**	2921 **4012**				
ND 200	3 P	2915 **3021**	2921 **3020**				
	4 P	2915 **4021**	2921 **4020**				
ND 250	3 P	2915 **3025**	2921 **3025**				
	4 P	2915 **4025**	2921 **4025**				
ND 315	3 P	2915 **3031**	2921 **3031**				
	4 P	2915 **4031**	2921 **4031**				
ND 400	3 P	2915 **3041**	2921 **3041**				
	4 P	2915 **4041**	2921 **4041**				
ND 500	3 P	2915 **3051**	2921 **3051**				
	4 P	2915 **4051**	2921 **4051**				
630	3 P	2900 **3063**	2900 **3063**	Black* 2799 **7012** Red 2799 **7013**	S4 type Black IP65* 1443 **3111** Red IP65 1444 **3111**	200 mm 1401 **1520** 320 mm* 1401 **1532** 400 mm 1401 **1540**	1st contact NO/NC 2799 **0001** 2nd contact NO/NC 2799 **0002**
	4 P	2900 **4063**	2900 **4063**				
800	3 P	2900 **3080**	2900 **3080**				
	4 P	2900 **4080**	2900 **4080**				
1250	3 P	2900 **3120**	2900 **3120**				
	4 P	2900 **4120**	2900 **4120**				
1600	3 P	2900 **3160**	2900 **3160**				
	4 P	2900 **4160**	2900 **4160**				

** Standard.*
(1) S-type auxiliary contact for signalisation.
(2) For direct operation.
(3) For external operation.

For more informations: see "Accessories" pages.

This document is not a contract. SOCOMEC reserves the right to modify features without prior notice in view of continued improvement. 2008 - 2009

SIDER
125 to 1600 A

References

Side operation

Rating (A)	No. of poles	Switch body only - Direct operation	Switch body only - External right-side operation	Direct handle	Door interlocked external handle	Shaft extensions for external handle	Auxiliary contacts(2)
ND 125	3 P	2915 **3012**	2921 **3012**	Black 3629 **7901**	S2 type Black IP55* 1425 **2111** Black IP65 1427 **2111** Red IP65 1428 **2111**	200 mm* 1400 **1020**	1st contact NO/NC 3999 **0021**(3) 2 contact NO/NC 3999 **0022**(3) 1 contact NC 3999 **0701**(4) 1 contact NO 3999 **0702**(4)
	4 P	2915 **4012**	2921 **4012**				
ND 200	3 P	2915 **3021**	2921 **3020**				
	4 P	2915 **4021**	2921 **4020**				
ND 250	3 P	2915 **3025**	2921 **3025**				
	4 P	2915 **4025**	2921 **4025**				
ND 315	3 P	2915 **3031**	2921 **3031**				
	4 P	2915 **4031**	2921 **4031**				
ND 400	3 P	2915 **3041**	2921 **3041**				
	4 P	2915 **4041**	2921 **4041**				
ND 500	3 P	2915 **3051**	2921 **3051**				
	4 P	2915 **4051**	2921 **4051**				
630	3 P	2905 **3063**	2905 **3063**	Black* 2799 **7052** Escutcheon(1) 2799 **7070** Red 2799 **7053** Escutcheon(1) 2799 **7070**	S3 type Black IP65* 1437 **3111** Red IP65 1438 **3111**	200 mm* 1401 **1520**	1st contact NO/NC 2799 **0011** 2nd contact NO/NC 2799 **0012**
	4 P	2905 **4063**	2905 **4063**				
800	3 P	2905 **3080**	2905 **3080**				
	4 P	2905 **4080**	2905 **4080**				
1250	3 P	2905 **3120**	2905 **3120**				
	4 P	2905 **4120**	2905 **4120**				
1600	3 P	2905 **3160**	2905 **3160**				
	4 P	2905 **4160**	2905 **4160**				

** Standard.*
(1) For direct operation, an escutcheon is necessary.
(2) S-type auxiliary contact for signalisation.
(3) For direct operation.
(4) For external operation.

For more informations: see "Accessories" pages.

This document is not a contract. SOCOMEC reserves the right to modify features without prior notice in view of continued improvement. 2008 - 2009

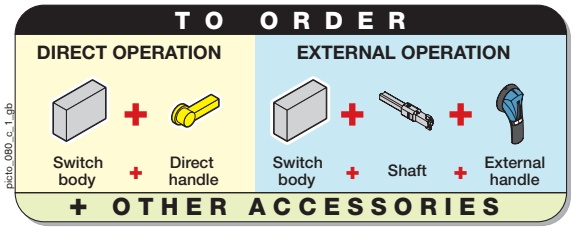

Accessories

Direct handle

acces_148_a_1_cat

acces_153_a_1_cat

References

For front operation

Rating (A)	Handle colour	References
ND 125 … ND 500	Black	3629 **7901**
630 … 1600	Black	2799 **7012***
630 … 1600	Red	2799 **7013**

** Standard.*

For side operation

Rating (A)	Handle colour	References
ND 125 … ND 500	Black	3629 **7901**
630 … 1600	Black	2799 **7052**
630 … 1600	Red	2799 **7053**

Escutcheon for direct side operation

Rating (A)	External IP	Reference
630 … 1600	IP54	2799 **7070**

Door interlocked external handle

acces_150_a_1_cat

S2-type handle

acces_151_a_1_cat

S3-type handle

acces_152_a_1_cat

S4-type handle

References

For front operation

Rating (A)	Handle type	Handle colour	External IP(1)	References
ND 125 … ND 500	S2	Black	IP55	1421 **2111***
ND 125 … ND 500	S2	Black	IP65	1423 **2111**
ND 125 … ND 500	S2	Red	IP65	1424 **2111**
630 … 1600	S4	Black	IP65	1443 **3111***
630 … 1600	S4	Red	IP65	1444 **3111**

** Standard.*
(1) IP: protection rating according to IEC 60529 standard.

For external right-side operation

Rating (A)	Handle type	Handle colour	External IP(1)	References
ND 125 … ND 500	S2	Black	IP55	1425 **2111**(2)
ND 125 … ND 500	S2	Red	IP65	1428 **2111**(2)
630 … 1600	S3	Black	IP65	1437 **3111**(2)
630 … 1600	S3	Red	IP65	1438 **3111**(2)

(1) IP: protection rating according to IEC 60529 standard.
(2) Included escutcheon.

This document is not a contract. SOCOMEC reserves the right to modify features without prior notice in view of continued improvement. 2008 - 2009

Functions
References
Accessories
Characteristics
Dimensions

Accessories

S-type handle adapter

acces_187_a

Use
Enables new S type handles to be mounted using old fixing holes for replacement or retrofit applications.
Dimensions
Adds 12 mm to the depth.

Reference

Colour	External IP(1)	Pack qty	Reference
Black	IP65	10	1493 **0000**

(1) IP: protection rating according to IEC 60529 standard.

Alternative S-type handle cover colours

acces_198_a_1_cat

Use
For single lever handles S2, S3-type and for double lever handles S4-type.
Other colours: please consult us.

References

Colour	Pack qty	Handle type	References
Light grey	50	S2, S3	1401 **0001**
Dark grey	50	S2, S3	1401 **0011**
Light grey	50	S4	1401 **0031**
Dark grey	50	S4	1401 **0041**

Shaft extensions for external handle

acces_143_b_1_cat

acces_144_b_1_cat

Use
Standard length:
- 200 mm,
- 250 mm,
- 300 mm,
- 400 mm,
- 500 mm.

Other lengths: please consult us.

References

For front operation

Rating (A)	Dimension X (mm)	Shaft length (mm)	Type	References
ND 125 … ND 500	95 … 230	200	10 x 10	1400 **1020**
ND 125 … ND 500	95 … 350	320	10 x 10	1400 **1032***
ND 125 … ND 500	95 … 530	500	10 x 10	1400 **1050**
630 … 1600	295 … 555	200	15 x 12	1401 **1520**
630 … 1600	295 … 675	320	15 x 12	1401 **1532***
630 … 1600	295 … 755	400	15 x 12	1401 **1540**

** Standard.*

For side operation

Rating (A)	Dimension Y (mm)	Shaft length (mm)	Type	References
ND 125 … ND 500	20 … 110	80	10 x 10	1403 **1008**
ND 125 … ND 500	20 … 230	200	10 x 10	1400 **1020**
630 … 1600	98 … 258	200	15 x 12	1401 **1520**

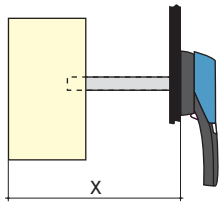

acces_202_a

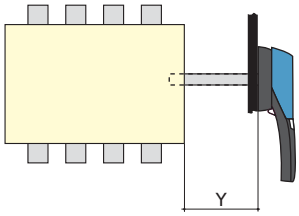

acces_203_a_1_x_cat

This document is not a contract. SOCOMEC reserves the right to modify features without prior notice in view of continued improvement. 2008 - 2009

Accessories

Auxiliary contacts for pre-break and signalling - Front operation

acces_047_a_2_cat

acces_056_a_1_cat

Use

Pre-break and signalling of positions 0 and I:

- 1 to 2 NO/NC auxiliary contacts,
- 1 to 4 NO or NC auxiliary contacts,
- 1 to 4 NO + NC auxiliary contacts.

Characteristics

NO/NC AC: IP2.

Connection to the control circuit

6.35 mm fast-on connection.

Electrical characteristics

30 000 operations.

References

NO/NC contacts

Rating (A)	No. of AC	References
ND 125 … ND 500	1st	3999 **0021**(1)
ND 125 … ND 500	2	3999 **0022**(1)
630 … 1600	1st	2799 **0001**
630 … 1600	2nd	2799 **0002**

NC contact

Rating (A)	No. of AC	Reference
ND 125 … ND 500	1 to 4	3999 **0701**(2)

NO contact

Rating (A)	No. of AC	Reference
ND 125 … ND 500	1 to 4	3999 **0702**(2)

NO + NC contacts

Rating (A)	No. of AC	Reference
630 … 1600	1	2799 **0005**

Low level NO/NC contacts

Rating (A)	No. of AC	Reference
630 … 1600	1	2799 **0101**

(1) For direct operation.
(2) For external operation.

Characteristics

Rating (A)	Contact type	Nominal current (A)	Operating current I_e (A) 250 VAC AC-13	400 VAC AC-13	24 VDC DC-13	48 VDC DC-13
ND 125 … ND 500	NO/NC	16	-	3	12	2
ND 125 … ND 500	NC	10	6	4	5	3
ND 125 … ND 500	NO	10	6	4	5	3
630 … 1600	NO/NC	16	12	8	14	6
630 … 1600	NO+NC	15	10	6	15	12

This document is not a contract. SOCOMEC reserves the right to modify features without prior notice in view of continued improvement. 2008 - 2009

Functions
References
Accessories
Characteristics
Dimensions

Accessories

Auxiliary contacts for pre-break and signalling - Right side operation

acces_047_a_2_cat

acces_056_a_1_cat

Use

Pre-break and signalling of positions 0 and I:

- 1 to 2 NO/NC auxiliary contacts
- 1 to 4 NO or NC auxiliary contacts.

Connection to the control circuit

6.35 mm fast-on connection.

Characteristics

NO/NC AC: IP2.

Electrical characteristics

30 000 operations.

References

NO/NC contact

Rating (A)	No. of AC	References
ND 125 … ND 500	1st	3999 **0021**(1)
ND 125 … ND 500	2	3999 **0022**(1)
630 … 1600	1st	2799 **0011**
630 … 1600	2nd	2799 **0012**

NC contact

Rating (A)	No. of AC	References
ND 125 … ND 500	1 to 4	3999 **0701**(2)

NO contact

Rating (A)	No. of AC	Reference
ND 125 … ND 500	1 to 4	3999 **0702**(2)

Low level NO/NC contact

Rating (A)	No. of AC	References
630 … 1600	1	2799 **0111**

(1) For direct operation.
(2) For side operation.

Characteristics

Rating (A)	Contact type	Nominal current (A)	Operating current I_e (A) 250 VAC AC-13	400 VAC AC-13	24 VDC DC-13	48 VDC DC-13
ND 125 … ND 500	NO/NC	16	-	3	12	2
ND 125 … ND 500	NC	10	6	4	5	3
ND 125 … ND 500	NO	10	6	4	5	3
630 … 1600	NO/NC	16	12	8	14	6

S-type auxiliary contacts for signalisation - Front and right side operation

acces_051_a_2_cat

Use

Pre-break and signalling of positions 0 and I: 1 to 4 NO +NC auxiliary contacts.

Connection to the control circuit

By terminals with max. section 10 mm².

Electrical principle

The NO + NC S-type auxiliary contacts can be configured as 2 NO or 2 NC.

Electrical characteristics

30 000 operations.

References

NO+NC contact

Rating (A)	No. of AC	References
ND 125 … ND 500	1	3999 **0041**
ND 125 … ND 500	2	3999 **0042**
ND 125 … ND 500	3	3999 **0043**
ND 125 … ND 500	4	3999 **0044**

Characteristics

Rating (A)	Contact type	Nominal current (A)	Operating current I_e (A) 250 VAC AC-13	400 VAC AC-13	24 VDC DC-13	48 VDC DC-13
ND 125 … ND 500	NO+NC	20	10	8	-	-

This document is not a contract. SOCOMEC reserves the right to modify features without prior notice in view of continued improvement. 2008 - 2009

Accessories

Terminal shrouds

acces_093_a_1_cat

Use
Top or bottom protection against direct contact with terminals or connection parts.

Advantage
Perforations allowing remote thermographic inspection without removal.

References

Rating (A)	No. of poles	Position	References
ND 125 … ND 200	3 P	top or bottom	3998 **3016**(1)
ND 125 … ND 200	4 P	top or bottom	3998 **4016**(1)
ND 250 … ND 500	3 P	top or bottom	3998 **3025**(1)
ND 250 … ND 500	4 P	top or bottom	3998 **4025**(1)

(1) Order 2 references to shroud top and bottom terminals.

Terminal screens

acces_058_a_1_cat

Use
Top or bottom protection against direct contacts with terminals or connection parts.

References

Rating (A)	No. of poles	Position	References
630 … 800	3 P	top or bottom	2998 **3080**(1)
630 … 800	4 P	top or bottom	2998 **4080**(1)
1250 … 1600	3 P	top or bottom	2998 **3120**(1)
1250 … 1600	4 P	top or bottom	2998 **4120**(1)

(1) Order 2 references to shield top and bottom terminals.

Cage terminals

acces_053_a_1_cat

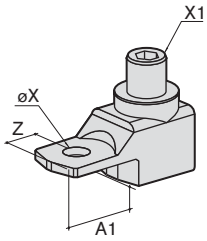

acces_091_a_1_x_cat

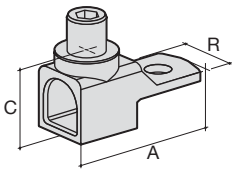

acces_092_a_1_x_cat

Use
Connection of bare copper cables onto the terminals (without terminal lugs).

References

Rating (A)	No. of poles	References
ND 125	3 P	5400 **3016**
ND 125	4 P	5400 **4016**
ND 200 … ND 250	3 P	5400 **3025**
ND 200 … ND 250	4 P	5400 **4025**
ND 315 … ND 400	3 P	5400 **3040**
ND 315 … ND 400	4 P	5400 **4040**
ND 500 … 630	3 P	5400 **3063**
ND 500 … 630	4 P	5400 **4063**

Connections

Rating (A)	Section flexible cable (mm^2)	Section rigid cable (mm^2)	Width flexible bar (mm)	Stripped over (mm)
ND 125	16 … 95	16 … 95	13	22
ND 200 … ND 250	16 … 185	16 … 185	18	27
ND 315 … ND 400	50 … 240	50 … 300	20	34
ND 500 … 630	70 … 300	70 … 300	24	34

Dimensions

Rating (A)	A	A1	C	R	ØX	X1	Z
ND 125	47.5	22.5	25	20	8,5	M12	10
ND 200 … ND 250	62	31.5	31.5	25	10.5	M16	14
ND 315 … ND 400	71.5	32	38	32	10.5	M20	15
ND 500 … 630	76.5	37	38	40	12.5	M20	15

This document is not a contract. SOCOMEC reserves the right to modify features without prior notice in view of continued improvement. 2008 - 2009

Functions
References
Accessories
Characteristics
Dimensions

Accessories

Inter phase barriers

Use

Safety isolating separation between the terminals, essential for use at 690 VAC or in a dusty atmosphere.

References

Rating (A)	No. of poles	References
1250 … 1600	3 P	2998 **0003**
1250 … 1600	4 P	2998 **0004**

Handle key interlocking accessories

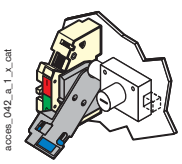

Fig. 1

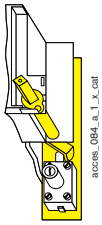

Fig. 2

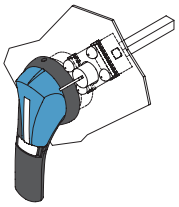

Fig. 3

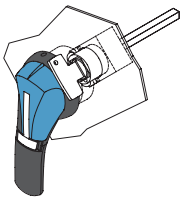

Fig. 4

Use

Locking in position 0 of the front or right-side operation handle:

- using RONIS EL11AP lock in direct front or right-side operation (Fig. 1);
- using RONIS EL11AP lock in direct front operation (Fig. 2);
- using RONIS EL11AP or CASTELL K-type lock in external front operation (Fig. 3);
- using RONIS EL11AP lock in external right-side operation;
- using CASTELL FS-type in external front operation (Fig. 4).

References

Locking using RONIS EL11AP lock (not included)

Rating (A)	Operation	Figure	References
ND 125 … ND 500	direct front	1	3629 **7913**(1)
630 … 1600	direct front	2	2799 **7007**(2)
ND 125 … 1600	external front	3	1499 **7701**
ND 125 … ND 500	direct right-side	1	3629 **7913**(1)
ND 125 … 1600	external right-side	3	1499 **7701**

Locking using CASTELL K-type lock (not included)

Rating (A)	Operation	Figure	References
ND 125 … ND 500	external front	3	1499 **7702**

Locking using CASTELL FS-type lock (not included)

Rating (A)	Operation	Figure	Reference
ND 125 … ND 500	external front	4	1499 **7703**

(1) Handle included.
(2) Factory fitted only.

Other specific accessories

- Mechanical coupling device for making switches with “n” poles with the same or different ratings.
- Mechanical interlocking device.
- Mounting plates and escutcheon for standard systems.

This document is not a contract. SOCOMEC reserves the right to modify features without prior notice in view of continued improvement. 2008 - 2009

Characteristics (according to IEC 60947-3)

Thermal current I_{th} (40°C)		ND 125 A	ND 200 A	ND 250 A	ND 315 A	ND 400 A
Rated insulation voltage U_i (V)		800	800	800	800	800
Rated impulse withstand voltages U_{imp} (kV)		8	8	8	8	8
Rated operational currents I_e (A)						
Rated voltage	Load duty category	A/B(1)	A/B(1)	A/B(1)	A/B(1)	A/B(1)
400 VAC	AC-21 A / AC-21 B	125/125	200/200	250/250	315/315	400/400
	AC-22 A / AC-22 B	125/125	200/200	250/250	315/315	400/400
	AC-23 A / AC-23 B	125/125	200/200	250/250	315/315	400/400
500 VAC	AC-20 A / AC-20 B	125/125	200/200	250/250	315/315	400/400
	AC-21 A / AC-21 B	125/125	160/160	250/250	250/250	315/315
	AC-22 A / AC-22 B	125/125	160/160	250/250	250/250	315/315
	AC-23 A / AC-23 B	125/125	160/160	250/250	250/250	315/315
690 VAC(2)	AC-20 A / AC-20 B	125/125	200/200	250/250	315/315	400/400
	AC-21 A / AC-21 B	125/125	160/160	250/250	315/315	400/400
	AC-22 A / AC-22 B	125/125	160/160	250/250	315/315	400/400
	AC-23 A / AC-23 B	125/125	160/160	250/250	250/250	315/315
220 VDC	DC-20 A / DC-20 B	125/125	200/200	250/250	315/315	-/-
	DC-21 A / DC-21 B	125/125	160/160	250/250	250/250	-/-
	DC-22 A / DC-22 B	125/125	160/160	250/250	250/250	-/-
	DC-23 A / DC-23 B	125/125	125/125	200/200	200/200	-/-
440 VDC	DC-20 A / DC-20 B	125/125	200(3)/200	250/250	315/315	-/-
	DC-21 A / DC-21 B	125(3)/125(3)	160(3)/160(3)	250(3)/250(3)	250(3)/250(3)	-/-
	DC-22 A / DC-22 B	125(3)/125(3)	160(3)/160(3)	250(3)/250(3)	250(3)/250(3)	-/-
	DC-23 A / DC-23 B	125(3)/125(3)	125(3)/125(3)	200(3)/200(3)	200(3)/200(3)	-/-
500 VDC	DC-20 A / DC-20 B	125/125	200/200	250/250	315/315	400/400
	DC-21 A / DC-21 B	125(3)/125(3)	160(3)/160(3)	250(3)/250(3)	250(3)/250(3)	315(3)/315(3)
	DC-22 A / DC-22 B	125(3)/125(3)	160(3)/160(3)	250(3)/250(3)	250(3)/250(3)	315(3)/315(3)
	DC-23 A / DC-23 B	125(3)/125(3)	125(3)/125(3)	200(3)/200(3)	200(3)/200(3)	200(3)/315(3)
Operational power in AC-23 (kW)(1)(4)						
At 400 VAC without pre-break AC		63/63	110/110	140/140	160/160	220/220
At 500 VAC without pre-break AC		85/85	110/110	160/160	160/160	220/220
At 690 VAC without pre-break AC		110/110	150/150	220/220	220/220	295/295
Reactive power (kvar)(4)						
At 400 VAC		55	90	115	145	185
Fuse protected short-circuit withstand (kA rms prospective)(5)						
Prospective short-circuit (kA rms)		100	35	100	60	50
Associated fuse rating (A)		125	200	250	315	400
Overload capacity						
Rated short-time withstand current 0,3 s. I_{cw} (kA rms)		15	15	17	17	17
Short-circuit making capacity (kA peak) (5)		20	20	32.5	32.5	40
Connection						
Minimum Cu cable section (mm²)		-	-	-	-	-
Minimum Cu busbar section (mm²)		-	-	-	-	-
Maximum Cu cable section (mm²)		120	120	240	240	2 x 150
Maximum Cu busbar width (mm)		20	20	32	32	45
Min. tightening torque (Nm)		9	9	20	20	20
Mechanical characteristics						
Endurance (number of operating cycles) (6)		10 000	10 000	10 000	10 000	10 000
Operating effort (Nm)		10	10	12	12	15
Weight of 3 P switch (kg)		1.8	1.8	3.2	3.2	4.8
Weight of 4 P switch (kg)		2.3	2.3	4.5	4.5	6.1

(1) Category with index A = frequent operation - Category with index B = infrequent operation. (2) With terminal shrouds or phase barrier. (3) 4-pole device with 2 pole in series by polarity. (4) The power value is given for information only, the current values vary from one manufacturer to another. (5) For a rated operating voltage U_e = 400 VAC. (6) Increased endurances: please consult us.

This document is not a contract. SOCOMEC reserves the right to modify features without prior notice in view of continued improvement. 2008 - 2009

SIDER
125 to 1600 A

Characteristics (according to IEC 60947-3)

Thermal current I_{th} (40°C)		ND 500 A	630 A	800 A	1250 A	1600 A
Rated insulation voltage U_i (V)		800	1000	1000	1000	1000
Rated impulse withstand voltages U_{imp} (kV)		8	12	12	12	12
Rated operational currents I_e (A)						
Rated voltage	Load duty category	A/B(1)	A/B(1)	A/B(1)	A/B(1)	A/B(1)
400 VAC	AC-21 A / AC-21 B	500/500	630/630	800/800	1250/1250	1600/1600
	AC-22 A / AC-22 B	500/500	630/630	800/800	1250/1250	1250/1250
	AC-23 A / AC-23 B	500/500	630/630	630/800	1000/1000	1000/1000
500 VAC	AC-20 A / AC-20 B	500/500	630/630	800/800	1250/1250	1600/1600
	AC-21 A / AC-21 B	315/315	630/630	800/800	1250/1250	1600/1600
	AC-22 A / AC-22 B	315/315	630/630	800/800	1000/1000	1000/1000
	AC-23 A / AC-23 B	315/315	500/500	500/500	800/800	800/800
690 VAC(2)	AC-20 A / AC-20 B	500/500	630/630	800/800	1250/1250	1600/1600
	AC-21 A / AC-21 B	500/500	630/630	800/800	1000/1000	1250/1250
	AC-22 A / AC-22 B	500/500	315/315	315/315	400/400	400/400
	AC-23 A / AC-23 B	315/315	100/100	125/125	200/200	200/200
220 VDC	DC-20 A / DC-20 B	-/-	630/630	800/800	1250/1250	1600/1600
	DC-21 A / DC-21 B	-/-	630/630	800/800	1000/1000	1250/1250
	DC-22 A / DC-22 B	-/-	630/630	800/800	800/800	800/800
	DC-23 A / DC-23 B	-/-	630/630	800/800	800/800	800/800
440 VDC	DC-20 A / DC-20 B	-/-	630/630	800/800	1250/1250	1600/1600
	DC-21 A / DC-21 B	-/-	500/500	630/630	-/-	1000/1000
	DC-22 A / DC-22 B	-/-	630(3)/630(3)	800(3)/800(3)	800(3)/800(3)	800(3)/800(3)
	DC-23 A / DC-23 B	-/-	630(3)/630(3)	800(3)/800(3)	800(3)/800(3)	800(3)/800(3)
500 VDC	DC-20 A / DC-20 B	500/500	630/630	800/800	1250/1250	1600/1600
	DC-21 A / DC-21 B	315(3)/315(3)	500/500	630/630	800(3)/800(3)	1000/1000
	DC-22 A / DC-22 B	315(3)/315(3)	630(3)/630(3)	800(3)/800(3)	800(3)/800(3)	800(3)/800(3)
	DC-23 A / DC-23 B	200(3)/315(3)	630(3)/630(3)	800(3)/800(3)	800(3)/800(3)	800(3)/800(3)
Operational power in AC-23 (kW)(1)(4)						
At 400 VAC without pre-break AC		295/295	355/355	355/355	560/560	560/560
At 500 VAC without pre-break AC		220/220	355/355	355/355	560/560	560/560
At 690 VAC without pre-break AC		295/295	90/90	110/110	185/185	185/185
Reactive power (kvar)(4)						
At 400 VAC		230	290	365	575	-
Fuse protected short-circuit withstand (kA rms prospective)(5)						
Prospective short-circuit (kA rms)		30	100	70	100	120
Associated fuse rating (A)		500	630	800	1250	2 x 800
Overload capacity						
Rated short-time withstand current 0,3 s. I_{cw} (kA rms)		17	50	50	100	100
Short-circuit making capacity (kA peak) (5)		40	55	55	100	110
Connection						
Minimum Cu cable section (mm²)		-	2 x 150	2 x 185	-	-
Minimum Cu busbar section (mm²)		-	2 x 30 x 5	2 x 40 x 5	2 x 60 x 5	2 x 80 x 5
Maximum Cu cable section (mm²)		2 x 150	2 x 300	2 x 300	4 x 185	6 x 240
Maximum Cu busbar width (mm)		45	63	63	100	100
Min. tightening torque (Nm)		20	20	-	20	40
Mechanical characteristics						
Endurance (number of operating cycles) (6)		10 000	5 000	4 000	4 000	3 000
Operating effort (Nm) (front operation)		15	45	45	45	60
Weight of 3 P switch (kg)		4.8	8	8.5	11	16.5
Weight of 4 P switch (kg)		6.1	9.5	10	14	20.5

(1) Category with index A = frequent operation - Category with index B = infrequent operation. (2) With terminal shrouds or phase barrier. (3) 4-pole device with 2 pole in series by polarity. (4) The power value is given for information only, the current values vary from one manufacturer to another. (5) For a rated operating voltage U_e = 400 VAC. (6) Increased endurances: please consult us.

This document is not a contract. SOCOMEC reserves the right to modify features without prior notice in view of continued improvement. 2008 - 2009

Dimensions

Direct operation

• **SIDER ND 125 to ND 500 A**

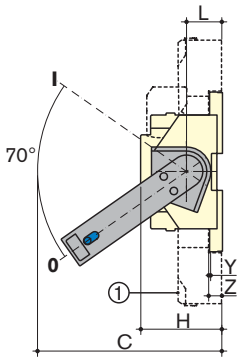

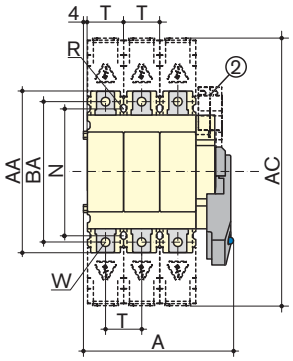

sider_059_a_1_x_cat

1. Terminal shrouds

2. 1 or 2 ACs for pre-break and signalling

Rating (A)	Overall dimensions A 3p.	A 4p.	C	Connection terminals AC	Switch body H	L	Switch mounting N	R	T	Connection terminals W	Y	Z	AA	BA
ND 125	160	196	178	268	82	36	130	5	36	8	3	20	162	141
ND 200	160	196	178	268	82	36	130	5	36	8	3	20	162	141
ND 250	232	322	173	350	77	31	162	6	60	10	3	20	195	165
ND 315	232	322	173	350	77	31	162	6	60	10	3	20	195	165
ND 400	280	346	173	360	77	31	172	6	66	10	3	20	214	175
ND 500	280	346	173	360	77	31	172	6	66	10	3	20	214	175

Front operation

• **SIDER ND 125 to ND 500 A**

External front operation

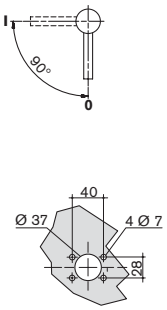

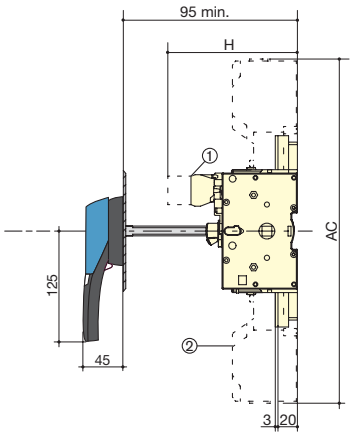

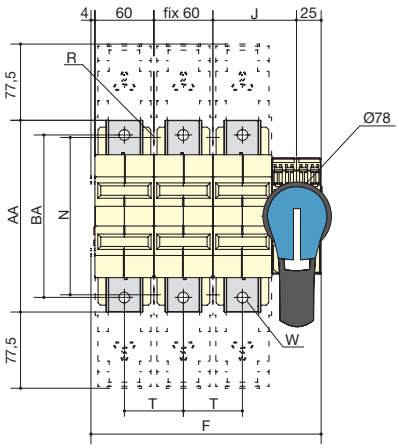

sider_103_b_1_x_cat

1. 1 or 2 ACs for pre-break and signalling

2. Terminal shrouds

Rating (A)	Terminal shrouds AC	F 3p.	F 4p.	Switch body H	J	Switch mounting N	R	T	Connection terminals W	AA	BA
ND 125	268	148	184	137	54	130	5	36	8	162	141
ND 200	268	148	184	137	54	130	5	36	8	162	141
ND 250	350	234	294	132	85	162	6	60	10	195	165
ND 315	350	234	294	132	85	162	6	60	10	195	165
ND 400	360	252	318	132	91	172	6	66	10	214	175
ND 500	360	252	318	132	91	172	6	66	10	214	175

This document is not a contract. SOCOMEC reserves the right to modify features without prior notice in view of continued improvement. 2008 - 2009

Dimensions

Front operation

• SIDER 630 to 1600 A

Direct front operation

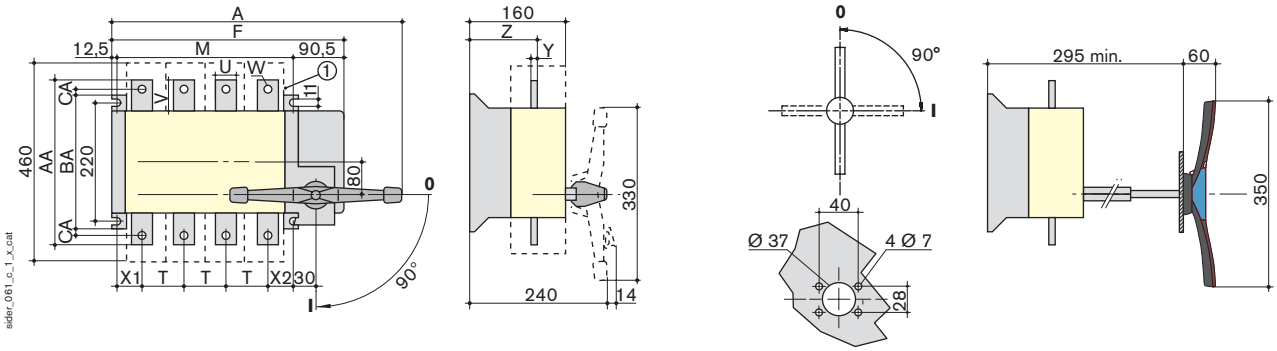

Commande frontale extérieure

1. Terminal screens

Rating (A)	Overall dimensions A 3p.	A 4p.	Switch body F 3p.	F 4p.	Switch mounting M 3p.	M 4p.	T	U	V	W	Connection terminals X1	X2	Y	Z	AA	BA	CA
630	463	543	358	438	255	335	80	40	50	13	42.5	52.5	6	106	300	260	20
800	463	543	358	438	255	335	80	50	60	-	47.5	47.5	6	106	320	-	-
1250	555	675	450	560	347	457	120	63	65	-	46.5	60.5	7	107	330	-	-
1600	555	675	450	560	347	457	120	80	80	-	46.5	60.5	15	111	360	-	-

Side operation

• SIDER ND 125 to ND 500 A

External side operation

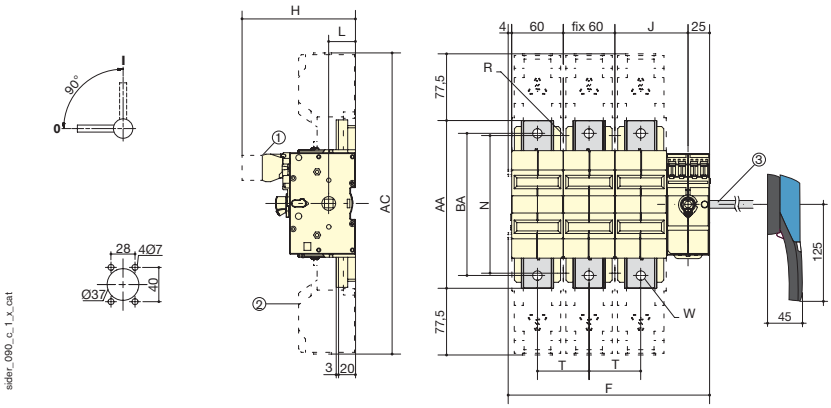

1. 1 or 2 ACs for pre-break and signalling
2. Terminal shrouds
3. Max. length with shaft extension: 230 mm

Rating (A)	Terminal shrouds AC	Switch body F 3p.	F 4p.	H	J	L	Switch mounting N	R	Connection terminals T	W	AA	BA
ND 125	268	148	184	137	54	36	130	5	36	8	162	141
ND 200	268	148	184	137	54	36	130	5	36	8	162	141
ND 250	350	234	294	132	85	31	162	6	60	10	195	165
ND 315	350	234	294	132	85	31	162	6	60	10	195	165
ND 400	360	252	318	132	91	31	172	6	66	10	214	175
ND 500	360	252	318	132	91	31	172	6	66	10	214	175

This document is not a contract. SOCOMEC reserves the right to modify features without prior notice in view of continued improvement. 2008 - 2009

Dimensions

Side operation

• SIDER 630 to 1600 A

Direct side operation

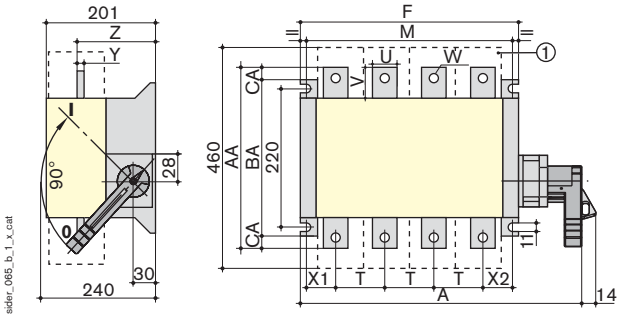

1. Terminal screens

External side operation

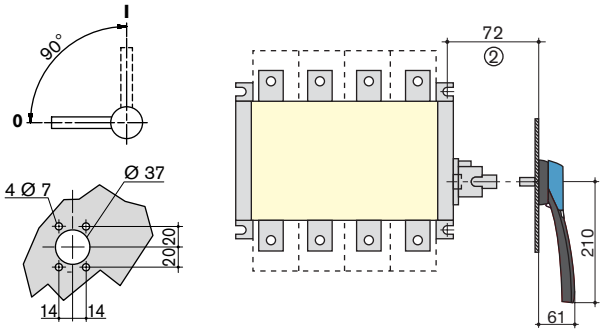

2. Minimum length with shaft extension: 111 mm

Rating (A)	Overall dimensions A 3p.	A 4p.	Switch body F 3p.	F 4p.	Switch mounting M 3p.	M 4p.	T	U	V	W	Connection terminals X1	X2	Y	Z	AA	BA	CA
630	387	467	280	360	255	335	80	40	50	13	42.5	52.5	6	147	300	260	20
800	387	467	280	360	255	335	80	50	60	-	47.5	47.5	6	147	320	-	-
1250	479	599	372	492	347	467	120	63	65	-	46.5	60.5	7	148	330	-	-
1600	479	599	372	492	347	467	120	80	80	-	46.5	60.5	15	152	360	-	-

Connection terminals

• SIDER 800 A

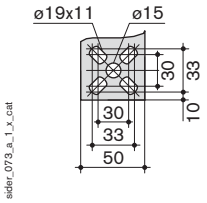

• SIDER 1250 A

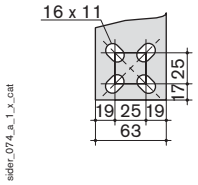

• SIDER 1600 A

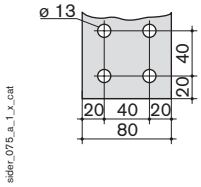

Door drilling

• With RONIS EL11AP lock

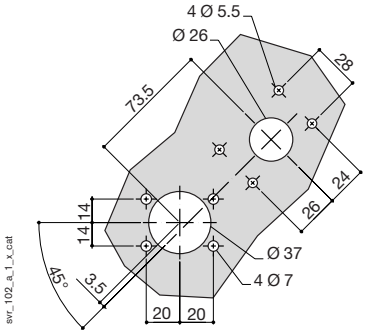

• With CASTELL K lock

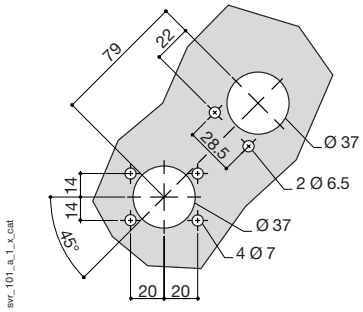

This document is not a contract. SOCOMEC reserves the right to modify features without prior notice in view of continued improvement. 2008 - 2009

SIDERMAT
250 to 1800 A

Functions
References
Accessories
Characteristics
Dimensions

sdmat_066_a_1_cat

Functions

SIDERMAT are manually operated tri- or tetrapolar load break switches which can be tripped remotely.

They break on and off under load and provide safety isolation for any low voltage electric circuit.

The tripping function is used to provide the following functions:

- personal protection against insulation faults by combination with toroids and differential relays,
- protection against overloads by combination with CT and thermal relays,
- protection against short circuits with fuses.

Conformity to standards

- IEC 60947-3
- EN 60947-3
- VDE 0660-107 (1992)
- NBN EN 60947-3
- BS EN 60947-3

General characteristics

- Remote breaking by voltage release device.
- Visible double breaking.
- Compatibility with complementary protection modules.

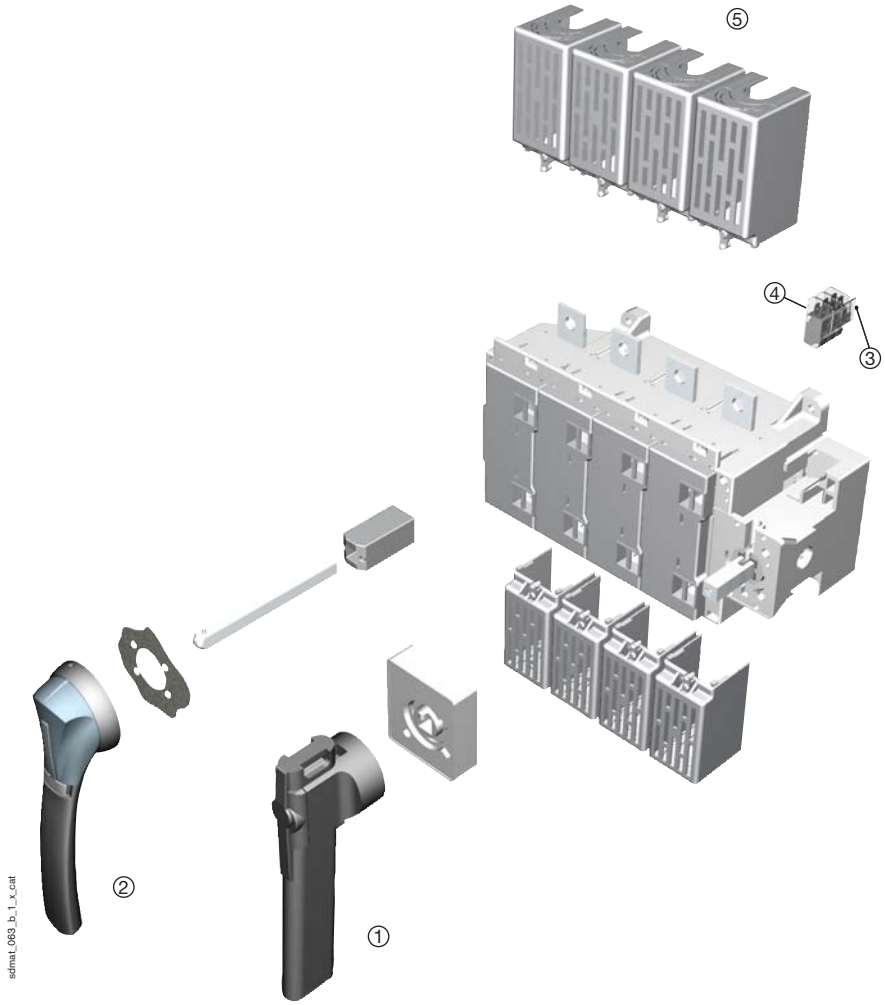

sdmat_063_b_1_x_cat

Overview (for further details, please see the installation instructions supplied with each device).

1. Direct front handle.
2. External front handle.
3. NO/NC position AC.
4. NO/NC AC wired to ready mounted transmission coil (standard).
5. Terminal shrouds.

This document is not a contract. SOCOMEC reserves the right to modify features without prior notice in view of continued improvement. 2008 - 2009

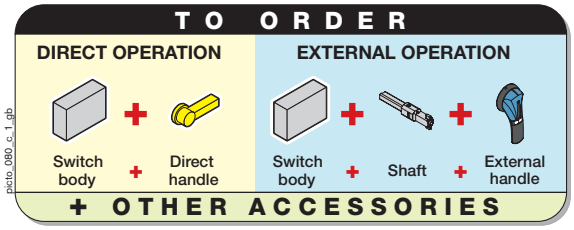

References

Front operation - Switch with shunt trip coil 230 VAC

Rating (A)	No. of poles	Switch body only	Direct handle	Door interlocked external handle	Shaft extensions for external handle	Position auxiliary contacts	Tripping auxiliary contacts	Terminal shrouds	Terminal screens	Inter phase barriers
250	3 P	3500 **3026**	Black 3999 **6203**	S3 type Black IP55* 1431 **3511** Red IP55 1432 **3511**	200 mm 1401 **1520** 320 mm* 1401 **1532**	1st contact NO/NC 3999 **0051** 2nd contact NO/NC 3999 **0052**	1 contact NO/NC 3999 **0031**	3 P 3998 **3040**(1)(2) 4 P 3998 **4040**(1)(2)	/	/
	4 P	3500 **4026**								
400	3 P	3500 **3041**								
	4 P	3500 **4041**								
630	3 P	3500 **3064**								
	4 P	3500 **4064**								
800	3 P	3500 **3081**						3998 **3063**(1)(2)		
	4 P	3500 **4081**						3998 **4063**(1)(2)		
1250	3 P	3500 **3121**						/	3 P 2998 **3120**(1)(3) 4 P 2998 **4120**(1)(3)	3 P 2998 **0003** 4 P 2998 **0004**
	4 P	3500 **4121**								
1600	3 P	3500 **3161**								
	4 P	3500 **4161**								
1800	3 P	3500 **3180**								standard
	4 P	3500 **4180**								

** Standard.*
(1) Top or bottom.
(2) Order 2 references to shroud top and bottom terminals.
(3) Order 2 references to shield top and bottom terminals.

For more informations: see "Accessories" pages.

This document is not a contract. SOCOMEC reserves the right to modify features without prior notice in view of continued improvement. 2008 - 2009

Functions
References
Accessories
Characteristics
Dimensions

Accessories

Direct handle

acces_156_a_1_cat

References

Rating (A)	Handle colour	References
250 … 1800	Black	3999 **6203**
250 … 1800	Red	consult us

Door interlocked external handle

acces_151_a_1_cat

acces_166_a_1_cat

S3-type handle

References

Rating (A)	Handle colour	External IP[1]	References
250 … 1800	Black	IP55	1431 **3511***
250 … 1800	Red	IP55	1432 **3511**

** Standard.*
(1) IP: protection rating according to IEC 60529.

Alternative S-type handle cover colours

acces_198_a_1_cat

Use

For single lever handles type S3.
Other colours: please consult us.

References

Handle colour	Pack qty	References
Light grey	50	1401 **0001**
Dark grey	50	1401 **0011**

Shaft extensions for external handle

acces_144_b_1_cat

Use

Standard length:
- 200 mm,
- 320 mm.

Other lengths: please consult us.

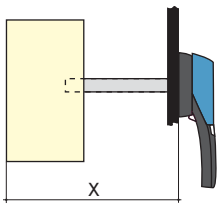

acces_202_a_1_x_cat

References

Rating (A)	Dimension X (mm)	Shaft length (mm)	References
250 … 630	275 … 439	200	1401 **1520**
250 … 630	275 … 559	320	1401 **1532***
800	296 … 460	200	1401 **1520**
800	296 … 580	320	1401 **1532***
1250 … 1800	291 … 455	200	1401 **1520**
1250 … 1800	291 … 575	320	1401 **1532***

** Standard.*

This document is not a contract. SOCOMEC reserves the right to modify features without prior notice in view of continued improvement. 2008 - 2009

Accessories

Alternative coils

acces_049_a_1_cat

Shunt trip coil

acces_050_a_1_cat

Undervoltage trip coil

Use

Omnipolar breaking remotely controlled by shunt trip or undervoltage voltage release coil.

Note: the shunt trip coil must not be supplied for more than 5 s.

A shunt trip coil 230 VAC is fitted to the standard switch body.

To modify this coil, the reference opposite must be added to the switch reference.

Must be ordered at the same time as the switch.

Examples for ordering

- SIDERMAT with shunt trip coil 230 VAC - 1 reference: SIDERMAT 250 A, 3 pole, front operation: 3500 **3026**.
- SIDERMAT fitted with a non standard coil - 2 references: SIDERMAT 250 A, 3 pole, front operation, padlockable direct handle, fitted with a 110 VAC undervoltage trip coil: 3500 **3026** + 3991 **3110**.

References

Shunt trip coil

Voltage	References
24 VAC	3991 **1024**(1)(2)
48 VAC	3991 **1048**(1)(2)
110 VAC	3991 **1110**(1)(2)
230 VAC	standard
400 VAC	3991 **1380**(1)(2)
12 VDC	3991 **2012**(1)(2)
24 VDC	3991 **2024**(1)(2)
48 VDC	3991 **2048**(1)(2)
110 VDC	3991 **2220**(1)(2)
220 VDC	3991 **2220**(1)(2)

Undervoltage trip coil

Voltage	References
24 VAC	3991 **3024**(1)(2)
48 VAC	3991 **3048**(1)(2)
110 VAC	3991 **3110**(1)(2)
230 VAC	3991 **3220**(1)(2)
400 VAC	3991 **3380**(1)(2)
12 VDC	3991 **4012**(1)(2)
24 VDC	3991 **4024**(1)(2)
48 VDC	3991 **4048**(1)(2)
110 VDC	3991 **4110**(1)(2)
220 VDC	3991 **4220**(1)(2)

Undervoltage delayed trip coil

Voltage	Time (ms)	References
230 VAC	430	3993 **3230**(1)(2)
400 VAC	410	3993 **3400**(1)(2)

(1) To be ordered at the same time as the switch.
(2) For replacement coil replace first four numbers with "3990".

Characteristics

Shunt trip coil

Alternative voltage(V) (+5% to -20%)(1)	24	48	110	230	400
Consumption on inrush (VA)	80	100	100	120	120
Direct voltage (V) (+5% to -20%)	12	24	48	110	220
Consumption on inrush (W)	80	100	100	120	120

Undervoltage AC trip coil

Alternating voltage (V) (+5% to -10%)	24	48	110	230	400
Permanent consumption (VA)	13	13	13	13	20
Consumption on inrush (VA)	13	13	13	13	20
Minimum maintaining voltage (V)	15	25	60	140	200

Undervoltage DC trip coil

Direct voltage (V) (+5% to -10%)	12	24	48	110	220
Permanent consumption (W)	13	13	13	13	13
Consumption on inrush (W)	13	13	13	13	13
Minimum maintaining voltage (V)	6	15	25	60	140

(1) Note: The shunt trip coil must not be supplied for more than 5 s.
A shunt trip coil is fitted to the standard switch body.

This document is not a contract. SOCOMEC reserves the right to modify features without prior notice in view of continued improvement. 2008 - 2009

Accessories

Current-reducing resistor for undervoltage trip coil

Use
Reduces, by limiting the current, the effects on the undervoltage coils used in continuous processes or processes exposed to high ambient temperatures.

References

Voltage	References
110 VAC	3999 **3112**
230 VAC	3999 **3230**
400 VAC	3999 **3400**
110 VDC	3999 **4110**

Auxiliary contacts

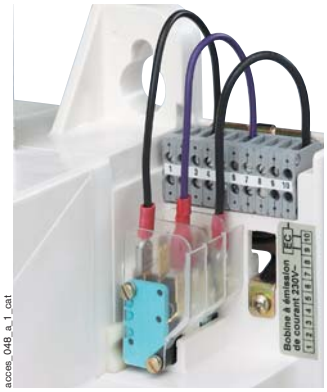
acces_048_a_1_cat

Use
Pre-breaking and signalling of positions 0 and I: 1 to 2 NO/NC auxiliary contacts.

Coil tripping
1 to 2 NO/NC auxiliary contacts.

Connection to control circuit
By 6.35 mm fast-on terminal.

Characteristics
NO/NC auxiliary contacts: IP2.

Electrical characteristics
30 000 operations.

References

NO / NC position contact

Rating (A)	No. of AC	References
250 … 1800	1st	3999 **0051**
250 … 1800	2nd	3999 **0052**

NO / NC low level position contact

Rating (A)	No. of AC	References
250 … 1800	1st	3999 **0111**
250 … 1800	2nd	3999 **0112**

NO / NC contact signalling coil tripping

Rating (A)	No. of AC	Reference
250 … 1800	1	3999 **0031**

Characteristics

NO / NC changeover position contact

		Operating current I_e (A)			
Rating (A)	Nominal current (A)	250 VAC AC-13	400 VAC AC-13	24 VDC DC-13	48 VDC DC-13
250 … 1800	16	12	8	14	6

NO / NC changeover contact signalling coil tripping

		Operating current I_e (A)			
Rating (A)	Nominal current (A)	250 VAC AC-13	400 VAC AC-13	24 VDC DC-13	48 VDC DC-13
250 … 1800	16	12	8	12	2

Terminal shrouds

acces_212_a_1_cat

Use
Top or bottom protection against direct contact with the terminals or connection parts.

Advantage
Perforations allowing remote thermographic inspection without dismantling.

References

Rating (A)	No. of poles	Position	References
250 … 630	3 P	top or bottom	3998 **3040**(1)
250 … 630	4 P	top or bottom	3998 **4040**(1)
800	3 P	top or bottom	3998 **3063**(1)
800	4 P	top or bottom	3998 **4063**(1)

(1) Order 2 references to shroud top and bottom terminals.

Terminal screens

Use
Top or bottom protection against direct contact with the terminals or connection parts.

References

Rating (A)	No. of poles	Position	References
1250 … 1800	3 P	top or bottom	2998 **3120**(1)
1250 … 1800	4 P	top or bottom	2998 **4120**(1)

(1) Order 2 references to shield top and bottom terminals.

This document is not a contract. SOCOMEC reserves the right to modify features without prior notice in view of continued improvement. 2008 - 2009

Accessories

Inter phase barriers

acces_036_a_1_cat

Use

Safety insulating separation between the phases, indispensable when used at 690 VAC or in a dusty atmosphere.

References

Rating (A)	No. of poles	References
1250 … 1600	3 P	2998 **0003**
1250 … 1600	4 P	2998 **0004**
1800	3 P	standard
1800	4 P	standard

Handle key interlocking accessories

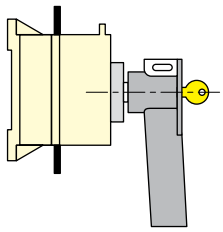

acces_010_b_1_x_cat

RONIS 1104 A lock

Use

Locking in position 0 of the front operation:

- using padlock (not supplied) ready integrated into the handle. Padlocking, in external front operation, locks the door,
- using RONIS 1104 A lock (key BC 3318) to be mounted directly on the padlockable handle,
- using lock (not included): see table opposite.

References

Locking onto the device using RONIS 1104A lock (included)

Rating (A)	Operation	Reference
250 … 1800	direct	3999 **8104**

Locking onto the device using RONIS EL11AP lock (not included)

Rating (A)	Operation	References
250 … 630	direct	3999 **6107**
800 … 1800	direct	3999 **7007**

Locking on the enclosure using RONIS EL11AP lock (not included)

Rating (A)	Operation	Reference
250 … 1800	external	1499 **7701**

Cage terminals

acces_053_a_1_cat

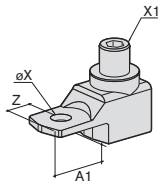

acces_091_a_1_x_cat

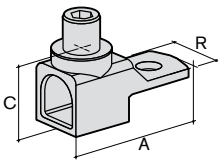

acces_092_a_1_x_cat

Use

Connection of bare copper cables onto the terminals (without terminal lugs).

References

Max. rating (A)	No. of poles	References
250	3 P	5400 **3025**
250	4 P	5400 **4025**
400	3 P	5400 **3040**
400	4 P	5400 **4040**
630	3 P	5400 **3063**
630	4 P	5400 **4063**

Connections

Rating (A)	Section flexible cable (mm²)	Section rigid cable (mm²)	Width flexible bar (mm)	Stripped over (mm)
250	16 … 185	16 … 185	18	27
400	50 … 240	50 … 300	20	34
630	70 … 300	70 … 300	24	34

Dimensions

Rating (A)	A	A1	C	R	ØX	X1	Z
250	62	31.5	31.5	25	10.5	M16	14
400	71.5	32	38	32	10.5	M20	15
630	76.5	37	38	40	12.5	M20	15

Other specific accessories

bd_03_04_01

- Connection accessories.
- Mounting plates for standard systems.
- Can be manufactured for particular atmospheres.

This document is not a contract. SOCOMEC reserves the right to modify features without prior notice in view of continued improvement. 2008 - 2009

SIDERMAT
250 to 1800 A

Characteristics (according to IEC 60947-3)

Thermal current I_{th} (40°C)		250 A	400 A	630 A	800 A	1250 A	1600 A	1800 A
Rated insulation voltage U_i (V)		1000	1000	1000	1000	1000	1000	1000
Rated impulse withstand voltage U_{imp} (kV)		8	12	12	12	12	12	12
Rated operational currents I_e (A)								
Rated voltage	Load duty category	A/B(1)	A/B(1)	A/B(1)	A/B(1)	A/B(1)	A/B(1)	A/B(1)
400 VAC	AC-22 A / AC-22 B	250/250	400/400	630/630	800/800	1250/1250	1600/1600	1600/1800
	AC-23 A / AC-23 B	250/250	400/400	630/630	630/630	1250/1250	1600/1600	1600/1600
500 VAC	AC-22 A / AC-22 B	250/250	400/400	630/630	800/800	1250/1250	1600/1600	1600/1600
	AC-23 A / AC-23 B	200/250	315/400	500/630	630/630	1000/1000	1250/1250	1250/1250
690 VAC(2)	AC-21 A / AC-21 B	250/250	400/400	630/630	800/800	1250/1250	1600/1600	1600/1600
	AC-22 A / AC-22 B	250/250	400/400	500/630	630/800	1000/1000	1250/1250	1250/1250
	AC-23 A / AC-23 B	200/250	315/400	400/500	500/500	800/800	1000/1000	1000/1000
400 VDC	DC-20 A / DC-20 B	250/250	400/400	630/630	800/800	1250/1250	1600/1600	1800/1800
	DC-21 A / DC-21 B	250/250	400/400	630/630	800/800	1250/1250	1600/1600	1600/1600
	DC-22 A / DC-22 B	250/250	400(3)/400(3)	630(3)/630(3)	800(3)/800(3)	1250(4)/1250(4)	1600(4)/1600(4)	1600(4)/1600(4)
	DC-23 A / DC-23 B	200/250	315(3)/400(3)	500(3)/630(3)	630(3)/800(3)	1250(4)/1250(4)	1250(4)/1250(4)	1250(4)/1250(4)
Operational power in AC-23 (kW)(1)(5)								
At 400 VAC without pre-break AC		132/132	220/220	355/355	355/355	710/710	900/900	900/900
At 690 VAC without pre-break AC		185/220	295/400	400/475	475/475	750/750	900/900	900/900
Reactive power (kvar)(5)								
At 400 VAC		115	185	290	365	575	-	-
Fuse protected short-circuit withstand (kA rms prospective)(6)								
Prospective short-circuit current (kA rms)		100	100	100	100	100	120	120
Associated fuse rating (A)		250	400	630	800	1250	2 x 800	2 x 900
Overload capacity								
Rated short-time withstand current 0.3 s. I_{cw} (kA eff.)		17	25	50	65	65	80	80
Short-circuit making capacity (kA peak) (6)		30	45	55	80	100	120	120
Connection								
Minimum Cu cable section (mm²)		95	185	2 x 150	2 x 185	-	-	4 x 240
Minimum Cu busbar section (mm²)		-	-	2 x 30 x 5	2 x 40 x 5	2 x 60 x 5	2 x 80 x 5	-
Maximum Cu cable section (mm²)		240	240	2 x 300	2 x 300	4 x 185	6 x 240	8 x 240
Maximum Cu busbar width (mm)		40	40	50	63	100	100	100
Min. tightening torque (Nm)		20	40	40		20	40	40
Mechanical characteristics								
Endurance (number of operating cycles)		8 000	8 000	5 000	5 000	5 000	3 000	3 000
Weight of 3 P switch (kg)		6.5	7	8	11	14	19	21
Weight of 4 P switch (kg)		7.5	8	9.5	13	16	21.5	23.5

(1) A/B: Category with index A = frequent operation - Category with index B = infrequent operation.
(2) With terminal shrouds or phase barrier.
(3) Poles cannot be juxtaposed.
(4) 4-pole device with 2 pole in series by polarity.
(5) The power value is given for information only, the current values vary from one manufacturer to another.
(6) For a rated operating voltage U_e = 400 VAC.

This document is not a contract. SOCOMEC reserves the right to modify features without prior notice in view of continued improvement. 2008 - 2009

Dimensions

Front operation

• SIDERMAT 250 to 800 A

Direct front operation

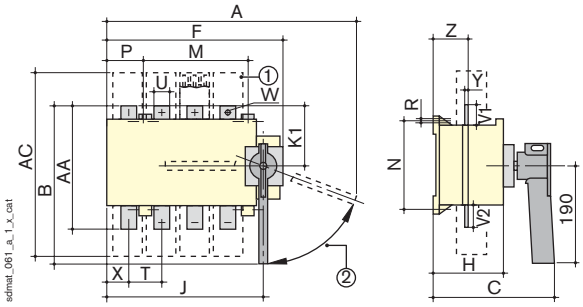

External front operation

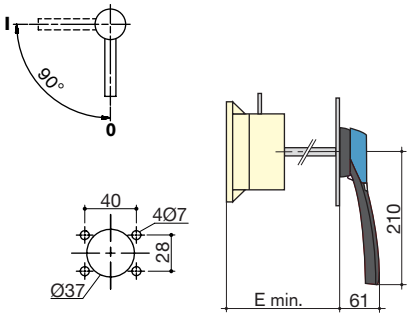

1. Terminal shrouds
2. Reset 70°

Rating (A)	Overall dimensions A 3p.	A 4p.	B	C	E min	Terminal shrouds AC	Switch body F 3p.	F 4p.	H	J 3p.	J 4p.	K1	Switch mounting M	N	P 3p.	P 4p.	R	T	U	V1	Connection terminals V2	W	X 3p.	X 4p.	Y	Z	AA
250	435	495	309	248	275	388	285	345	148	253	313	115	210	180	10	70	7	65	32	35	43	11	31	46	3	67	238
400	435	495	309	248	275	388	285	345	148	253	313	115	210	180	10	70	7	65	32	35	43	13	31	46	5	69	238
630	435	495	318.5	248	275	388	285	345	148	253	313	129	210	180	10	70	7	65	45	49	49	13	31	46	8	72	257
800	491	570	350	262	296	470	346	426	178	308	388	160	250	250	20	100	9	80	50	60	60	15	36	65	7	72	320

• SIDERMAT 1250 to 1800 A

Direct front operation

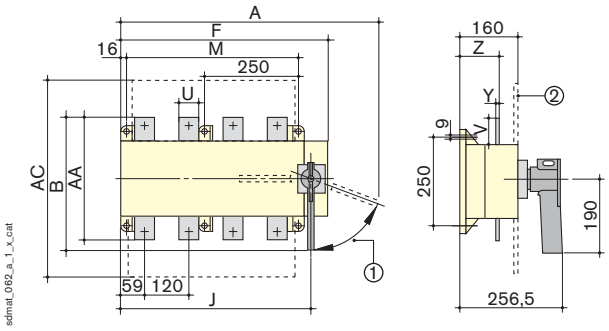

External front operation

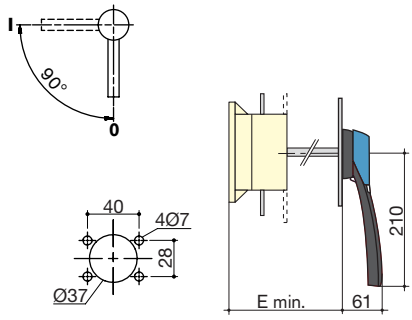

1. Reset 70°
2. Terminal screens

Rating (A)	Overall dimensions A 3p.	A 4p.	B	E min	Terminal shrouds AC	Switch body F 3p.	F 4p.	J 3p.	J 4p.	Switch mounting M 3p.	M 4p.	Connection terminals U	V	Y	Z	AA
1250	582	702	355	291	480	437	557	400	520	345	465	63	65	7	106	330
1600	582	702	370	291	479	437	557	400	520	345	465	80	80	15	110	360
1800	582	702	370	291	479	437	557	400	520	345	465	100	80	15	110	360

Connection terminals

• SIDERMAT 800 A

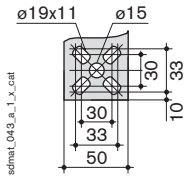

• SIDERMAT 1250 A

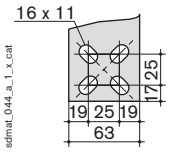

• SIDERMAT 1600 A

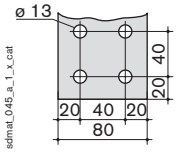

• SIDERMAT 1800 A

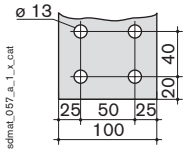

This document is not a contract. SOCOMEC reserves the right to modify features without prior notice in view of continued improvement. 2008 - 2009

SIRCO DC
40 to 315 A

- Functions
- References
- Characteristics
- Dimensions

sirco_369_a

Functions

SIRCO DC are manually operated multipolar load break switches.
They break on and off under load and provide safety isolation for any low voltage circuit of photovoltaic applications.

Conformity to standards

- IEC 60947-3
- EN 60947-3
- VDE 0660-107 (1992)
- IEC 60364-4-410 (protection to ensure the safety against the electric shocks).
- IEC 60364-7-712 (rules for the installations and sites special - Photovoltaic applications).
- DIN VDE 0126.

sirco_296_a_1_cat

General characteristics

- Fully visible breaking.
- Backplate or DIN rail mounting with 45 mm cut-out up to 40 A.
- High themal and dynamic withstand.
- U_i = 1000 VDC.

Available on request

- Motorised switch-disconnectors and motorised changeover switches.
- Other rating: consult us.
- Enclosed switches: consult us.

Applications

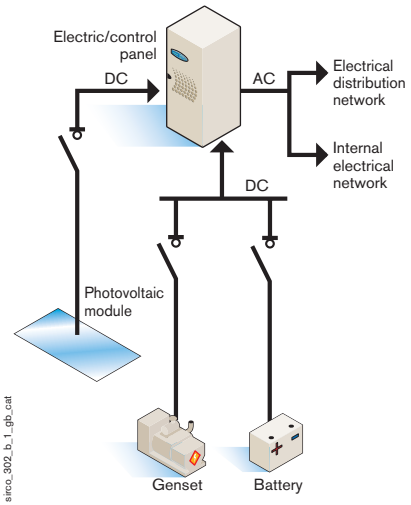

sirco_302_b_1_gb_cat

Photovoltaic is an application with strong induction, so it is essential to use load break switches in **load duty categories DC-21** for electrical safety.

A photovoltaic application must have a safety device to meet the technical requirements. The renewable energy producer must give a very clear separation between the solar panel and the rest of the installation to be able to provide an intervention.

This document is not a contract. SOCOMEC reserves the right to modify features without prior notice in view of continued improvement. 2008 - 2009

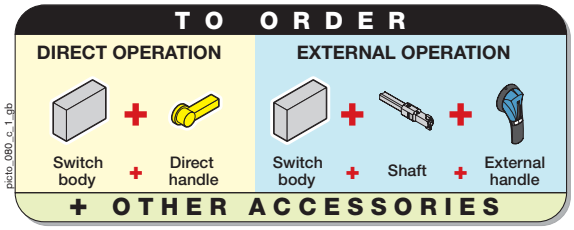

References

Front operation

Rating (A)	No. of pole	Switch body only	Direct handle	Door interlocked external	Shaft extensions for external operation	Auxiliary contacts	Terminal shrouds(2)	Terminal screens(3)	Inter phase barriers
40	3 P	-	Black* 3629 **4012**	S1 type Black IP55* 1411 **2111**	200 mm* 1401 **0520**	1st NO contact 3999 **0701**(1)	-	-	standard
	4 P	25DC **4004**	Red 3629 **4013**	Red/Yellow IP65 1414 **2111**	320 mm 1401 **0532**	1st NC contact 3999 **0702**(1)			
125	3 P	26DC **3014**	Black* 2699 **5042**	S2 type Black IP55* 1421 **2111**	200 mm 1400 **1020**	1st NO/NC contact 2699 **0031**	2694 **3014**	2698 **3012**	2998 **0033**
	4 P	26DC **4014**	Red 2699 **5043**				2694 **4014**	2698 **4012**	2998 **0034**
250	3 P	26DC **3026**	Black* 2699 **5052**	Black IP65 1423 **2111**	320 mm* 1400 **1032**		2694 **3021**	2698 **3020**	2998 **0023**
	4 P	26DC **4026**				2nd NO/NC contact 2699 **0032**	2694 **4021**	2698 **4020**	2998 **0024**
315	3 P	26DC **3032**	Red 2699 **5053**	Red IP65 1424 **2111**	500 mm 1400 **1050**		2694 **3051**	2698 **3050**	2998 **0013**
	4 P	26DC **4032**					2694 **4051**	2698 **4050**	2998 **0014**

** Standard.*
(1) For external operation.
(2) 1 set: top and bottom.
(3) 1 set: top or bottom.

This document is not a contract. SOCOMEC reserves the right to modify features without prior notice in view of continued improvement. 2008 - 2009

SIRCO DC
40 to 315 A

Characteristics (according to IEC 60947-3)

Thermal current I_{th} (40°C)			40 A	125 A	250 A	315 A
Rated insulation voltage U_i (V)			800	800(1)	800(1)	800(1)
Rated impulse withstand voltage U_{imp} (kV)			8	8	8	12
Rated operational currents I_e (A)						
Rated voltage	Load duty category	No. of poles	A/B(2)	A/B(2)	A/B(2)	A/B(2)
48 VDC	DC-21	1 P	40/40	125/125	250/250	315/315
	DC-22	1 P	40/40	125/125	250/250	315/315
110 VDC	DC-21	2 P	40/40	125/125	250/250	315/315
	DC-22	2 P	40/40	125/125	250/250	315/315
220 VDC	DC-21	3 P	40/40	125/125	250/250	315/315
	DC-22	3 P	- /40	- /125	- /250	315/315
400 VDC	DC-21	4 P	40/40	125/125	200/200	250/250
	DC-22	4 P	- /40	- /125	- /200	- /250
600 VDC	DC-21	4 P	20/20	80/80	180/180	250/250
	DC-22	4 P	- /20	80/80	125/125	- /250
800 VDC	DC-21	4 P	20/20	63/63	125/125	250/250
	DC-22	4 P	- /20	- /63	125/125	- /250
Overload capacity						
Rated short-time withstand current 0.3 s I_{cw} (kA rms)			2	15	17	25
Rated peak withstand current (kA peak)(3)			5.5	20	30	45
Connection						
Minimum Cu cable section (mm²)			2.5	-	-	-
Minimum Cu busbar section (mm²)			16	50	150	240
Maximum Cu cable section (mm)			-	25	32	40
Min. tightening torque (Nm)			2	9	20	20
Mechanical characteritics						
Endurance (number of operating cycles)			20 000	10 000	10 000	5 000
Weight of 3 P switch (kg)			0.4	1	2	3.5
Weight of 4 P switch (kg)			0.4	1.5	2	4

(1) U_i = 1000 VDC if mounted on an insulating backplate.
(2) Category with index A = frequent operation. / Category with index B = infrequent operation.
(3) For a rated operating voltage Ue = 400 VAC.

Pole connection in series

• **2 pole - top / bottom**

sirco_304_a_1_gb_cat

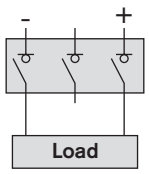

• **3 pole**

sirco_305_a_1_gb_cat

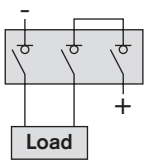

• **4 pole - top / bottom**

sirco_306_a_1_gb_cat

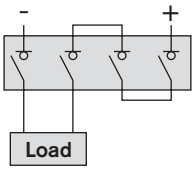

• **4 pole - bottom / bottom**

sirco_307_a_1_gb_cat

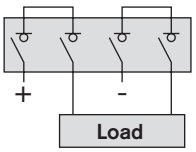

This document is not a contract. SOCOMEC reserves the right to modify features without prior notice in view of continued improvement. 2008 - 2009

Dimensions

• SIRCO DC 40 A

Direct front operation

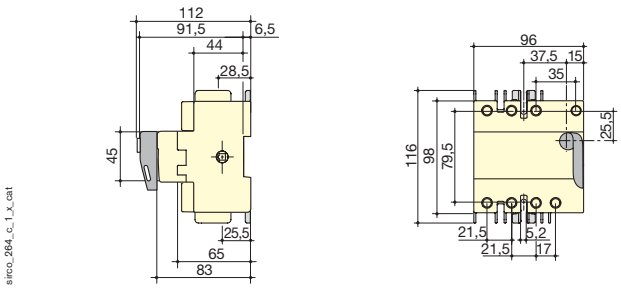

External front operation

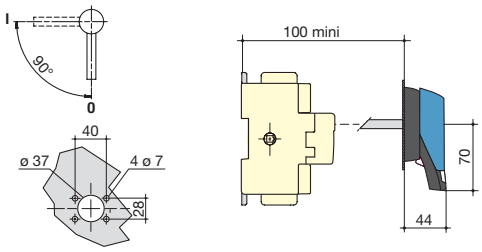

• SIRCO DC 125 to 315 A

Direct front operation

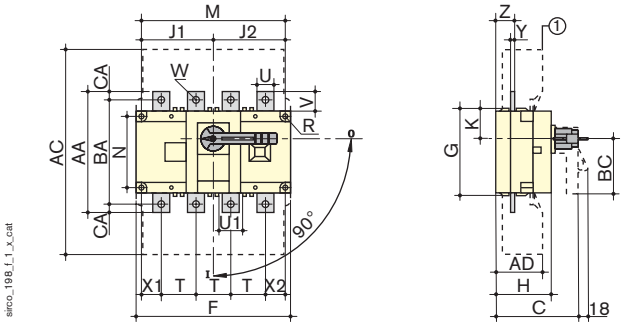

1. Terminal screens

External front operation

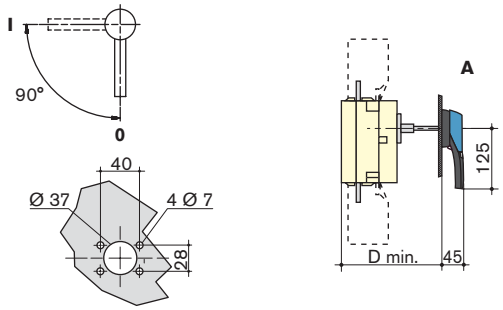

A. S2 type handle

Rating	Overall dimensions		Terminal shrouds		Switch body									Switch mounting				Connection terminals											
(A)	C	D min.	AC	AD	F 3p.	F 4p.	G	H	J1 3p.	J1 4p.	J2	K	BC	M 3p.	M 4p.	N	R	T	U	U1	V	W	X1 3p.	X1 4p.	X2	Y	Z	AA	BA	CA
125	115	125	235	50	140	170	93	65	45	75	75	31.5	80	120	150	65	5.5	36	20	20.5	25	9	28	22	20	3.5	20.5	135	115	10
250	125	135	280	60	180	230	108	75	55	105	105	34	115	160	210	80	5.5	50	25	25.5	30	11	33	33	27	3.5	22.5	160	130	15
315	160	165	401	89	230	290	170	110	75	135	135	55	115	210	270	140	7	65	32	45.5	37.5	11	42.5	37.5	37.5	5	36	235	205	15

This document is not a contract. SOCOMEC reserves the right to modify features without prior notice in view of continued improvement. 2008 - 2009

CMP
2500 to 5000 A

Functions
References
Accessories
Characteristics
Dimensions

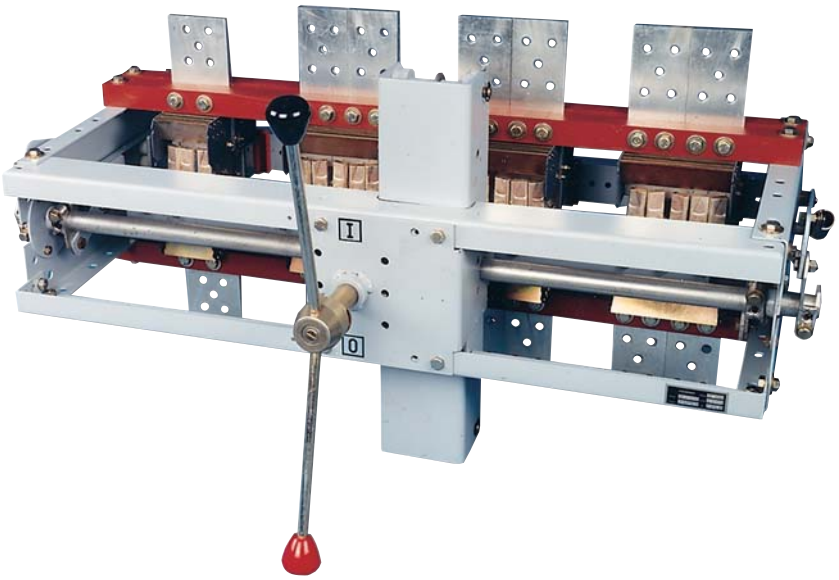

cmp_003_b_1_cat

Functions

CMP are manually operated high power load-break switches with optional remote tripping.

Conformity to standards

- IEC 60947-3
- NF EN 60947-3
- VDE 0660-107
- NBN EN 60947-3
- BS EN 60947-3

Approvals and certifications

- ASEFA

General characteristics

- Safety isolation by fully visible breaking.
- Sudden tripping.
- High thermal and dynamic withstand.
- Easy to use for large flat busbars.

Available on request

- X poles.
- Tripping coil.

This document is not a contract. SOCOMEC reserves the right to modify features without prior notice in view of continued improvement. 2008 - 2009

References

Front operation

cmp_003_b_5_cat

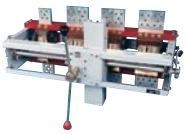

Rating (A)	No. of poles	Direct operation switch body (1)	External operation switch body (2)	Current transmitting switching coil (3)	Auxiliary contact (4)	Triple padlocking device and locking disk	Mechanical interlocking (5)
2500	3 P	2711 **3250**	2713 **3250**	2719 **0020**	2 contact NO+NC 2719 **0002**	For direct operation ■ For external operation 2719 **0013**	2719 **0024**
	3 P + N	2711 **4250**	2713 **4250**				
3200	3 P	2711 **3320**	2713 **3320**				
	3 P + N	2711 **4320**	2713 **4320**				
4500	3 P	2711 **3450**	2713 **3450**	2719 **0021**			
	3 P + N	2711 **4450**	2713 **4450**				
5000	3 P	2711 **3500**	2713 **3500**				
	3 P + N	2711 **4500**	2713 **4500**				

■ *Consult us.*
(1) Switch body + handle.
(2) Switch body + shaft extension + handle.
(3) Option (combined with the references above, this modifies the composition of the basic device).
(4) Maximum 6 AC.
(5) Vertical for 2 CMPs (distance between centres 500 mm).

This document is not a contract. SOCOMEC reserves the right to modify features without prior notice in view of continued improvement. 2008 - 2009

CMP
2500 to 5000 A

Accessories

Auxiliary contact

Use
Signalling of positions 0 and I.
Maximum = 6 AC NO + NC.

References
NO+NC contact

Rating (A)	Position of AC	Reference
2500 … 5000	2	2719 **0002**

Triple padlocking device and locking disk

Use
Locking using three padlocks maximum.

References

Rating (A)	Operation	References
2500 … 5000	direct	consult us
2500 … 5000	external	2719 **0013**

Mechanical interlocking

Use
Making of a changeover switch using 2 CMPs vertically positioned (distance between centres 500 mm).

References

Rating (A)	Reference
2500 … 5000	2719 **0024**

Characteristics (according to IEC 60947-3)

Thermal current I_{th} (40°C)		2500 A	3200 A	4500 A	5000 A
Rated insulation voltage U_i (V)		1000	1000	1000	1000
Rated impulse withstand voltage U_{imp} (kv)		12	12	12	12
Rated operational currents I_e (A)(1)					
Rated voltage	Load duty category	B	B	B	B
400 VAC	AC-21 B	2500	3200	4500	4500
690 VAC	AC-20 B	2500	3200	4500	5000
220 VDC(2)	DC-21 B	2500	3200	4500	4500
Short circuit operation					
Rated short-time withstand current 1s I_{cw} (kA rms)		50	64	80	80
Dynamic short circuit withstand (peak kA)(3)		110	145	190	190
Mechanical characteristics					
Durability (number of operating cycles)(4)		3 000	3 000	3 000	3 000

(1) With terminal shrouds or phase barrier.
(2) 4-pole device with 2 pole in series by polarity.
(3) For a rated operating voltage U_e = 400 VAC.
(4) Increased endurances: please consult us.

This document is not a contract. SOCOMEC reserves the right to modify features without prior notice in view of continued improvement. 2008 - 2009

Dimensions

• **CMP 2500 to 5000 A**

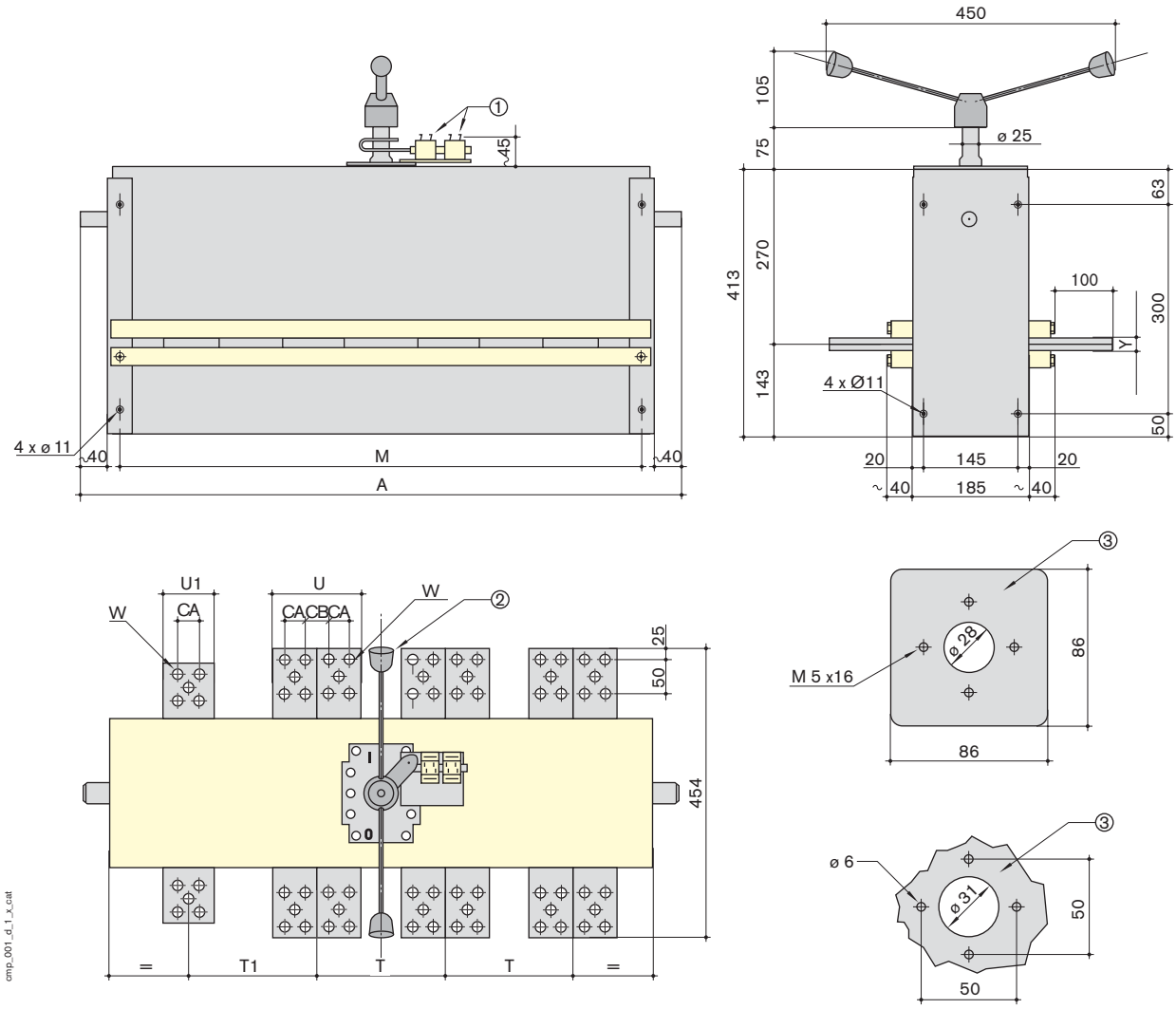

1. NO+NC contacts
2. Red knob at top: device in postion I (closed)
3. Door drilling

	Overall dimensions		Switch mounting					Connection terminals					
Rating (A)	A 3p.	A 3p.+N	M 3p.	M 3p.+N	T	T1 3p.	T1 3p.+N	U	U1	Y	CA	CB	W
2500	644	784	528	668	160	-	160	100	80	12	50	-	13
3200	784	934	668	818	200	-	200	126	80	14	30	33	11
4500	934	1084	818	968	260	-	200	200	100	12	50	50	13
5000	934	1084	818	968	260	-	200	200	100	12	50	50	13

CMP 2500 / 3200 A = 3 p 2500 / 3200 A + 1 N 1800 A.
CMP 4500 / 5000 A = 3 p 4500 / 5000 A + 1 N 2500 A.

This document is not a contract. SOCOMEC reserves the right to modify features without prior notice in view of continued improvement. 2008 - 2009

Other load break switches

bd_03_04_01

Despite already having in stock a wide range of **load break switches**, SOCOMEC also manufactures specific products suitable for all your requirements. Some of these products can be seen on these two pages, but this list does not include them all. Please, feel free to consult us.

Conformity to standards
- IEC 60947-3
- BS EN 60947-3
- EN 60947-3
- NBN EN 60947-3
- VDE 0660-107 (1992)

SIRCO range with over rated neutral

sirco_255_a_1_cat

SIRCO 3 x 250 A with neutral at 400 A

The use of power electronics is becoming more frequent. Chopper rectifiers and current inverters distort the signal by reinjecting the 3rd order harmonics which are added to each other on the neutral.

Available from 125 to 1800 A.

Specific range for 1000 V network

sider_078_a_1_cat

AC-22/AC-23 characteristics.

Multipolar switches

sirco_256_a_1_cat

SIRCO 12 pole (available up to 16 pole)

sider_077_a_1_cat

Mixed pole ratings

sider_076_a_1_cat

2 pole for DC networks

This document is not a contract. SOCOMEC reserves the right to modify features without prior notice in view of continued improvement. 2008 - 2009

SIRCO for earthing

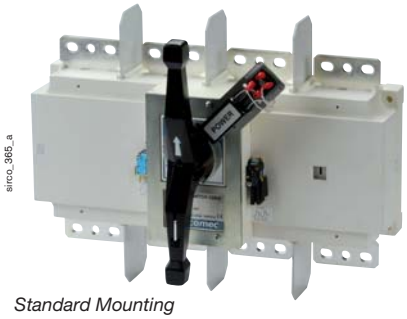
sirco_365_a

Standard Mounting

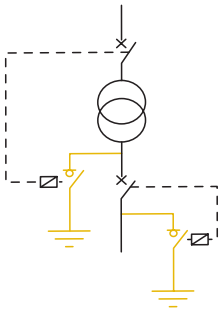
sider_338_a_1_x_cat

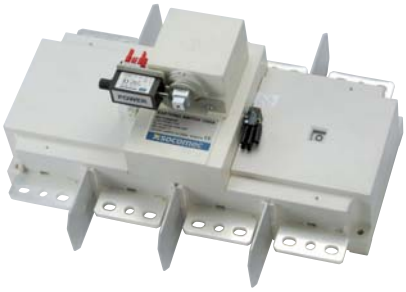
sirco_363_a_1_cat

Flat Mounting

- From 800 to 1800 A.
- 50 kA eff. 1 s.
- Special S4 type handle.
- Pre-break and pre-make auxiliary contact.
- Lockin using 230 VAC undervoltage coil.

SIRCO motorised load break switches

Based on ATyS motorised switches

sirco_343_a_1_cat

Functions

Remote controlled, they ensure making and breaking on load and security breaking of any low voltage electrical circuit.

References

Rating (A)		*125*	*160*	*250*
No. of poles	Supply voltage	References	References	References
3 P	230 VAC	1915 **3012**	1915 **3016**	1915 **3025**
4 P	230 VAC	1915 **4012**	1915 **4016**	1915 **4025**

Rating (A)		*400*	*630*	*800*
No. of poles	Supply voltage	References	References	References
3 P	230 VAC	1915 **3040**	1915 **3063**	1915 **3080**
4 P	230 VAC	1915 **4040**	1915 **4063**	1915 **4080**

Rating (A)		*1000*	*1250*	*1600*
No. of poles	Supply voltage	References	References	References
3 P	230 VAC	1915 **3100**	1915 **3120**	1915 **3160**
4 P	230 VAC	1915 **4100**	1915 **4120**	1915 **4160**

Other voltages 12 and 24 VDC: please consult us.

This document is not a contract. SOCOMEC reserves the right to modify features without prior notice in view of continued improvement. 2008 - 2009

SELECTION GUIDE

CHANGEOVER SWITCHES

APPLICATIONS	COMO C 25 to 100 A	SIRCOVER M(1) changeover switches 16 to 80 A	SIRCO VM1 changeover switches 63 to 125 A	SIRCOVER 125 to 3200 A
Changeover between two supplies	●	●	●	●
Switching between two loads	●	●	●	●
Reversing direction of operation	●	●	●	●
BY-PASS	●			
Breaking and earthing	●	●	●	●
Enclosed switches			●	●
CHARACTERISTICS				
OPERATION				
Manual	•	•	•	•
Motorised				
Automatic				
DIRECT HANDLE				
Front operation	•	•	•	•
Door mounted	•			
DOOR INTERLOCKED EXTERNAL HANDLE				
Front operation	•	•	•	•
BREAKING				
Fully visible	•	•	•	•
Visible			•	
SWITCHING				
Without overlapping contacts	•	•	•	•
Overlapping contacts	•	•	•	•
MOUNTING				
Flush mounting	•	•		
Back plate mounting	•	•	•	•
PAGES	see page A.82	see page A.8	see page A.88	see page A.94

*(1) **SIRCOVER M** is composed of two 3 pole **SIRCO M** switches, conversion kit and a fourth pole module, if request.*
(2) On request.

This document is not a contract. SOCOMEC reserves the right to modify features without prior notice in view of continued improvement. 2008 - 2009

As well as the rating of the switching device, the selection of device depends on:
- the conditions of use (number of operations, general level of installation, terminal level, receiver type),
- the safety specifications relating to visible breaking,
- the control functionalities (manual, automatic…),
- the type of installation in the enclosure (on a door, with a modular escutcheon, back plate mounted…).

We remain at your disposal to study together any adaptation to specific requirements which cannot be covered by this standard offer. Do not hesitate to consult us.

svr_125_a_1_cat	atysm_013_a_2_cat	atysm_007_a_2_cat	atys_003_a_3_cat	atys_097_b_2_cat	atys_448_b_2_cat
SIRCOVER BY-PASS 125 to 1600 A	**ATyS M 3 63 to 160 A**	**ATyS M 6 63 to 160 A**	**ATyS 3 125 to 3200 A**	**ATyS 6 125 to 3200 A**	**ATyS C30 / ATyS C40**
●	●	●	●	●	
	●		●		
	●		●		
●					
●	●	●	●	●	
					see page A.146
					couv_128_a_2_cat
					ATyS VISION software
•	•	•	•	•	
	•	•	•	•	
		•		•	
•	•	•	•	•	
	•	•	•	•	
					see page A.148
•					svr_134_a_1_x_cat
•	•	•	•	•	
•	•	•	•	•	
(2)			(2)		
			•	•	
•	•	•	•	•	**Other changeover switches 125 to 3200 A**
see page A.94	see page A.112	see page A.112	see page A.113	see page A.113	see page A.150

This document is not a contract. SOCOMEC reserves the right to modify features without prior notice in view of continued improvement. 2008 - 2009

COMO C
25 to 100 A

Functions
References
Accessories
Characteristics
Dimensions

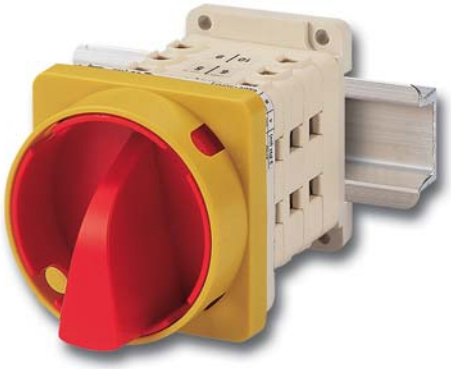

como_058_a_1_cat

Functions

COMO C are manually operated multipolar changeover switches.
They provide changeover, source inversion or switching under load between two low voltage power circuits, as well as safety isolation.

Conformity to standards

- IEC 60947-3
- EN 60947-3
- VDE 0660-107 (1992)

Approvals and certifications

- BBJ Poland (attestation of verification)
- UL “recognized”
- Lloyd’s Register of Shipping
- CCA
- FI (Finland)

General characteristics

- Fully visible breaking.
- Common point supplied as standard.

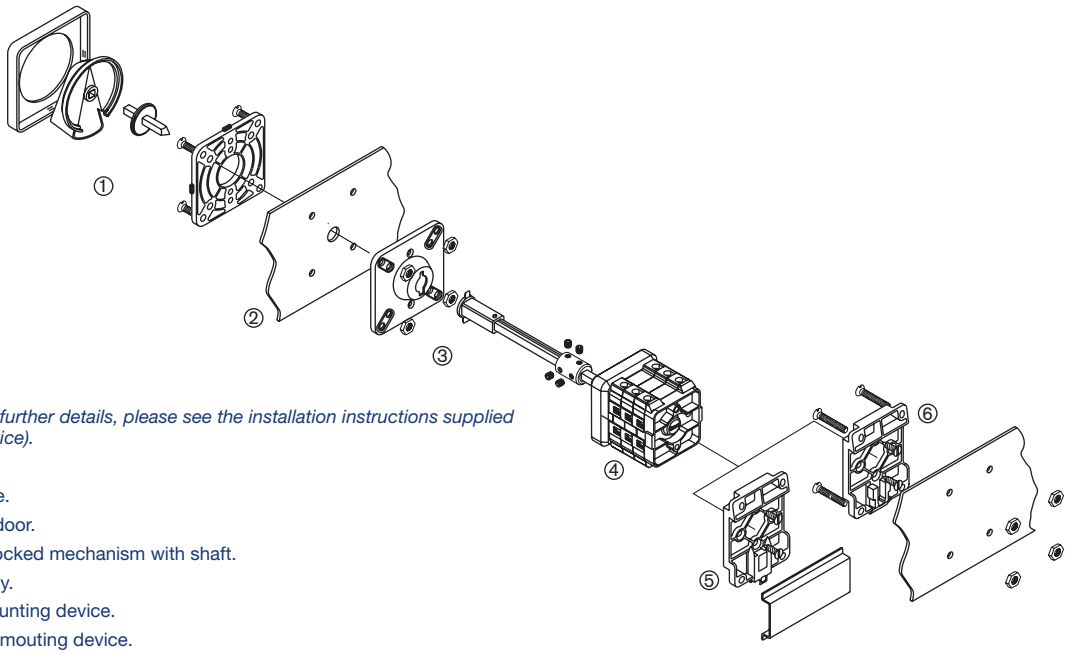

como_168_b_1_x_cat

Overview (for further details, please see the installation instructions supplied with each device).

1. IP54 handle.
2. Enclosure door.
3. Door interlocked mechanism with shaft.
4. Switch body.
5. DIN rail mounting device.
6. Back plate mouting device.

This document is not a contract. SOCOMEC reserves the right to modify features without prior notice in view of continued improvement. 2008 - 2009

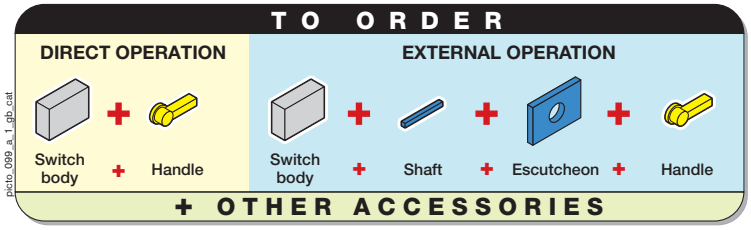

References

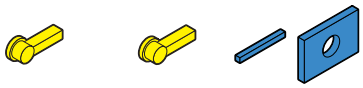

Rating (A)	No. of poles	Changeover operation type	Switch body only	IP54 padlockable handle	IP54 non-padlockable white handle	Door interlocked mechanism with shaft[1]	Mounting kit	IP65 gasket[2]	IP65 enclosed switch assembly[2]
25	3 P	I - II	4220 **3002**	Black/Grey 4259 **1042** Red/Yellow 4259 **1043**	4259 **2022**	200 mm 4259 **5042**	DIN rail mounting 4259 **9001** Back plate mounting 4259 **9040**	4299 **5001**	4221 **3C02**
	4 P	I - II	4220 **4002**						4221 **4C02**
	3 P	I - 0 - II	4230 **3002**		4259 **3022**				4231 **3C02**
	4 P	I - 0 - II	4230 **4002**						4231 **4C02**
	3 P	I - I+II - II	4240 **3002**		4259 **4022**				4241 **3C02**
	4 P	I - I+II - II	4240 **4002**						4241 **4C02**
	3 + 6 P	BY-PASS I - 0 - II	4250 **3002**		4259 **3022**				/
	4 + 8 P	BY-PASS I - 0 - II	4250 **4002**						
40	3 P	I - II	4220 **3004**		4259 **2042**				4221 **3C04**
	4 P	I - II	4220 **4004**						4221 **4C04**
	3 P	I - 0 - II	4230 **3004**		4259 **3042**				4231 **3C04**
	4 P	I - 0 - II	4230 **4004**						4231 **4C04**
	3 P	I - I+II - II	4240 **3004**		4259 **4042**				4241 **3C04**
	4 P	I - I+II - II	4240 **4004**						4241 **4C04**
	3 + 6 P	BY-PASS I - 0 - II	4250 **3004**		4259 **3042**				/
	4 + 8 P	BY-PASS I - 0 - II	4250 **4004**						
63	3 P	I - II	4220 **3006**	Black/Grey 4259 **1082** Red/Yellow 4259 **1083**	4259 **2082**	200 mm 4259 **5082**	DIN rail mounting 4259 **9001** Back plate mounting 4259 **9080**	4299 **5002**	4221 **3C06**
	4 P	I - II	4220 **4006**						4221 **4C06**
	3 P	I - 0 - II	4230 **3006**		4259 **3082**				4231 **3C06**
	4 P	I - 0 - II	4230 **4006**						4231 **4C06**
	3 P	I - I+II - II	4240 **3006**		4259 **4082**				4241 **3C06**
	4 P	I - I+II - II	4240 **4006**						4241 **4C06**
	3 + 6 P	BY-PASS I - 0 - II	4250 **3006**		4259 **3082**				/
	4 + 8 P	BY-PASS I - 0 - II	4250 **4006**						

(1) Handle not included.
(2) IP65: protection rating according to IEC 60529 standard.

Note: auxiliary contacts, factory fitted (please consult us).

For more informations: see "Accessories" pages.

This document is not a contract. SOCOMEC reserves the right to modify features without prior notice in view of continued improvement. 2008 - 2009

COMO C
25 to 100 A

References

como_108_a_1_cat

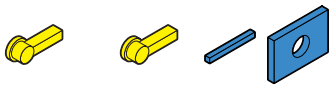

Rating (A)	No. of poles	Changeover operation type	Switch body only	IP54 padlockable handle	IP54 non-padlockable white handle	Door interlocked mechanism with shaft(1)	Mounting kit	IP65 gasket(2)	IP65 enclosed switch assembly(2)
80	3 P	I - II	4220 **3008**	Black/Grey 4259 **1082**	4259 **2082**	200 mm 4259 **5082**	DIN rail mounting 4259 **9001**	4299 **5002**	4221 **3C08**
	4 P	I - II	4220 **4008**						4221 **4C08**(3)
	3 P	I - 0 - II	4230 **3008**		4259 **3082**				4231 **3C08**
	4 P	I - 0 - II	4230 **4008**						4231 **4C08**(3)
	3 P	I - I+II - II	4240 **3008**		4259 **4082**				4241 **3C08**
	4 P	I - I+II - II	4240 **4008**						4241 **4C08**(3)
	3 + 6 P	BY-PASS I - 0 - II	4250 **3008**		4259 **3082**				/
	4 + 8 P	BY-PASS I - 0 - II	4250 **4008**						
100	3 P	I - II	4220 **3010**	Red/Yellow 4259 **1083**	4259 **2082**		Back plate mounting 4259 **9080**		/
	4 P	I - II	4220 **4010**						
	3 P	I - 0 - II	4230 **3010**		4259 **3082**				
	4 P	I - 0 - II	4230 **4010**						
	3 P	I - I+II - II	4240 **3010**		4259 **4082**				
	4 P	I - I+II - II	4240 **4010**						
	3 + 6 P	BY-PASS I - 0 - II	4250 **3010**		4259 **3082**				
	4 + 8 P	BY-PASS I - 0 - II	4250 **4010**						

(1) Handle not included.
(2) IP65: protection rating according to IEC 60529 standard.
(3) For 4 pole de-rated to 70 A.

Note: auxiliary contacts, factory fitted (please consult us).

Accessories

IP54 handle

acces_110_a_1_cat

acces_142_b_1_cat

References

Padlockable handle

Rating (A)	Handle colour	References
25 … 40	Black / Grey	4259 **1042**
25 … 40	Red / Yellow	4259 **1043**
63 … 100	Black / Grey	4259 **1082**
63 … 100	Red / Yellow	4259 **1083**

Non-padlockable white handle

Rating (A)	Changeover operation type	References
25	I - II	4259 **2022**
25	I - 0 - II / BY-PASS	4259 **3022**
25	I - I+II - II	4259 **4022**
40	I - II	4259 **2042**
40	I - 0 - II / BY-PASS	4259 **3042**
40	I - I+II - II	4259 **4042**
63 … 100	I - II	4259 **2082**
63 … 100	I - 0 - II / BY-PASS	4259 **3082**
63 … 100	I - I+II - II	4259 **4082**

This document is not a contract. SOCOMEC reserves the right to modify features without prior notice in view of continued improvement. 2008 - 2009

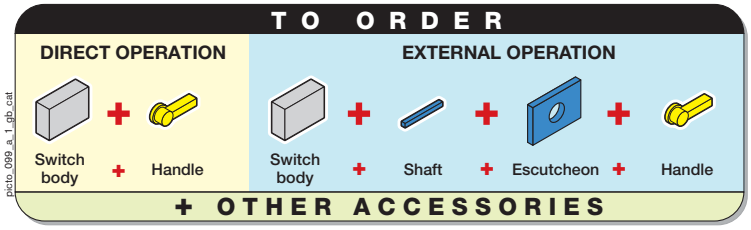

Accessories

Door interlocking mechanism with shaft (handle not included)

Use
Standard length: 200 mm.
Other lengths: please consult us.

References

Rating (A)	Length (mm)	References
25 … 40	200	4259 **5042**
63 … 100	200	4259 **5082**

Mounting kit

References

DIN rail mounting

Rating (A)	Reference
25 … 100	4259 **9001**

Back plate mounting

Rating (A)	References
25 … 40	4259 **9040**
63 … 100	4259 **9080**

IP65 gasket

References

For direct or external operation

Rating (A)	References
25 … 40	4299 **5001**
63 … 100	4299 **5002**

IP65 enclosed switches

Changeover switch mounted on the cover

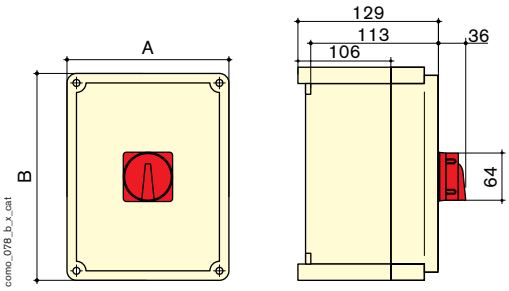

References

Rating (A)	No. of poles	Changeover operation type	A (mm)	B (mm)	References
25	3 P	I - II	135	135	4221 **3C02**
25	4 P	I - II	135	135	4221 **4C02**
25	3 P	I - 0 - II	135	135	4231 **3C02**
25	4 P	I - 0 - II	135	135	4231 **4C02**
25	3 P	I - I+II - II	135	135	4241 **3C02**
25	4 P	I - I+II - II	135	135	4241 **4C02**
40	3 P	I - II	135	135	4221 **3C04**
40	4 P	I - II	135	135	4221 **4C04**
40	3 P	I - 0 - II	135	135	4231 **3C04**
40	4 P	I - 0 - II	135	135	4231 **4C04**
40	3 P	I - I+II - II	135	135	4241 **3C04**
40	4 P	I - I+II - II	135	135	4241 **4C04**
63	3 P	I - II	135	180	4221 **3C06**
63	4 P	I - II	135	180	4221 **4C06**
63	3 P	I - 0 - II	135	180	4231 **3C06**
63	4 P	I - 0 - II	135	180	4231 **4C06**
63	3 P	I - I+II - II	135	180	4241 **3C06**
63	4 P	I - I+II - II	135	180	4241 **4C06**
80	3 P	I - II	135	180	4221 **3C08**
80	4 P	I - II	135	180	4221 **4C08**(1)
80	3 P	I - 0 - II	135	180	4231 **3C08**
80	4 P	I - 0 - II	135	180	4231 **4C08**(1)
80	3 P	I - I+II - II	135	180	4241 **3C08**
80	4 P	I - I+II - II	135	180	4241 **4C08**(1)

(1) For 4 pole de-rated to 70 A.

This document is not a contract. SOCOMEC reserves the right to modify features without prior notice in view of continued improvement. 2008 - 2009

COMO C
25 to 100 A

Characteristics (according to IEC 60947-3)

Thermal current I_{th} (40°C)		25 A	40 A	63 A	80 A	100 A
Rated insulation voltage U_i (V)		660	660	660	660	660
Rated impulse withstand voltage U_{imp} (kV)		4	4	4	4	4
Rated operational currents I_e (A)						
Rated voltage	Load duty category	A(1)	A(1)	A(1)	A(1)	A(1)
400 VAC	AC-21 A	25	40	63	80	100
	AC-22 A	25	40	63	80	100
	AC-23 A	20	32	63	63	63
Operational power in AC-23 (KW)(2)						
At 400 VAC without pre-break AC		9	15	22	30	32
Reactive power (kvar)(2)						
At 400 VAC		14	18	28	37	-
Fuse protected short-circuit withstand (kA rms prospective)(3)						
Prospective short-circuit current (kA rms)		6	6	8	8	8
Associated fuse rating (A)		25	40	63	80	100
Overload capacity(3)						
Short-circuit making capacity (kA peak)		2	2.6	5.8	5.8	6.5
Connection						
Minimum Cu cable section (mm²)		2.5	6	10	16	16
Maximum Cu cable section (mm²)		6	16	50	50	50
Min. tightening torque (Nm)		2	2	4	4	4
Mechanical characteristics						
Endurance (number of operating cycles)(4)		100 000	100 000	100 000	100 000	100 000
Weight of 3 P switch (kg)		0.25	0.3	0.55	0.63	0.63
Weight of 4 P switch (kg)		0.31	0.4	0.7	0.8	0.8

(1) Category with index A = frequent operation.
(2) The power value is given for information only, the current values vary from one manufacturer to another.
(3) For a rated operating voltage U_e = 400 VAC.
(4) Increased endurances: please consult us.

This document is not a contract. SOCOMEC reserves the right to modify features without prior notice in view of continued improvement. 2008 - 2009

Dimensions

• COMO C 25 A

Direct operation front mounting *Direct operation rear mounting* *Door interlocked external operation rear mounting*

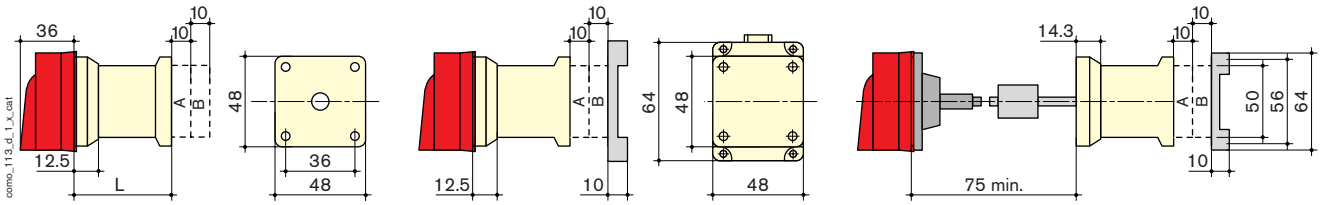

A. 1st auxiliary contact
B. 2nd auxiliary contact

Changeover operation type	L 3p.	L 4p.
I - II	50.5	60.5
I - 0 - II	50.5	60.5
I - I+II - II	50.5	60.5
BY-PASS I - 0 - II	70.5	80.5

• COMO C 40 A

Direct operation front mounting *Direct operation rear mounting* *Door interlocked external operation rear mounting*

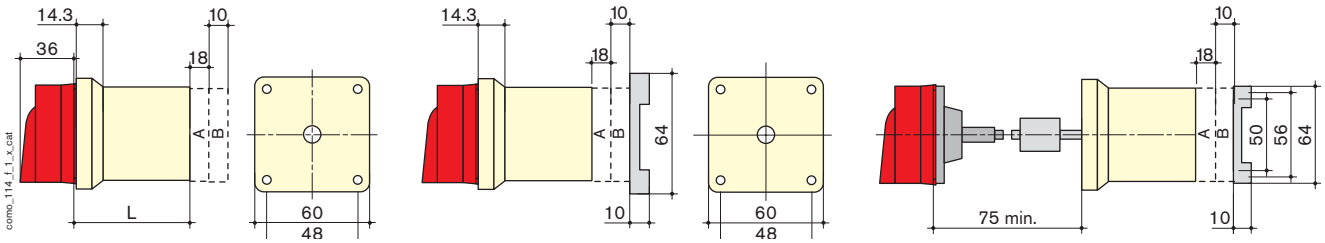

A. 1st auxiliary contact
B. 2nd auxiliary contact

Changeover operation type	L 3p.	L 4p.
I - II	60.3	72.3
I - 0 - II	60.3	72.3
I - I+II - II	60.3	72.3
BY-PASS I - 0 - II	84.3	96.3

• COMO C 63 to 100 A

Direct operation front mounting *Direct operation rear mounting* *Door interlocked external operation rear mounting*

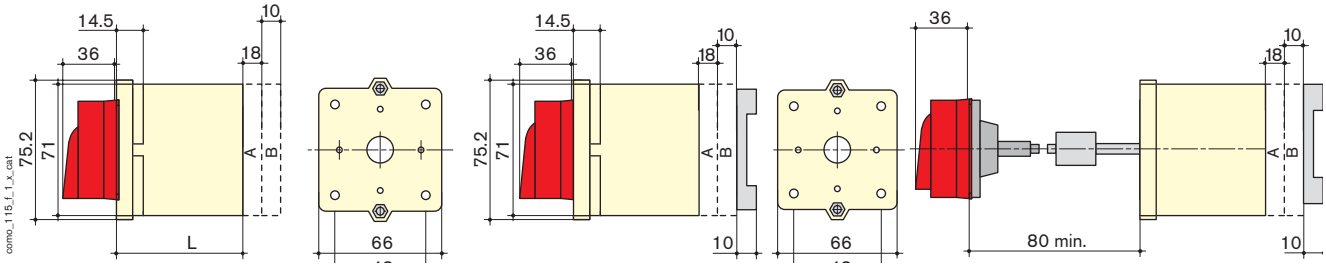

A. 1st auxiliary contact
B. 2nd auxiliary contact

Changeover operation type	L 3p.	L 4p.
I - II	82	99.5
I - 0 - II	82	99.5
I - I+II - II	82	99.5
BY-PASS I - 0 - II	117	134.5

This document is not a contract. SOCOMEC reserves the right to modify features without prior notice in view of continued improvement. 2008 - 2009

SIRCO VM1 changeover switches
63 to 125 A

Functions
References
Accessories
Characteristics
Dimensions

comut_004_a_1_cat

Functions

SIRCO VM1 changeover switches are manually operated three or four pole switches.

They provide changeover, source inversion or switching under load between two low voltage power circuits, as well as their safety isolation.

Conformity to standards

- IEC 60947-3
- EN 60947-3
- VDE 0660-107 (1992)
- NBN EN 60947-3
- BS EN 60947-3

General characteristics

- Safety isolation by fully visible breaking and visible double breaking.
- DIN rail/back plate mounted or modular panel with 45 mm front cutout.
- IP20 device and accessories.

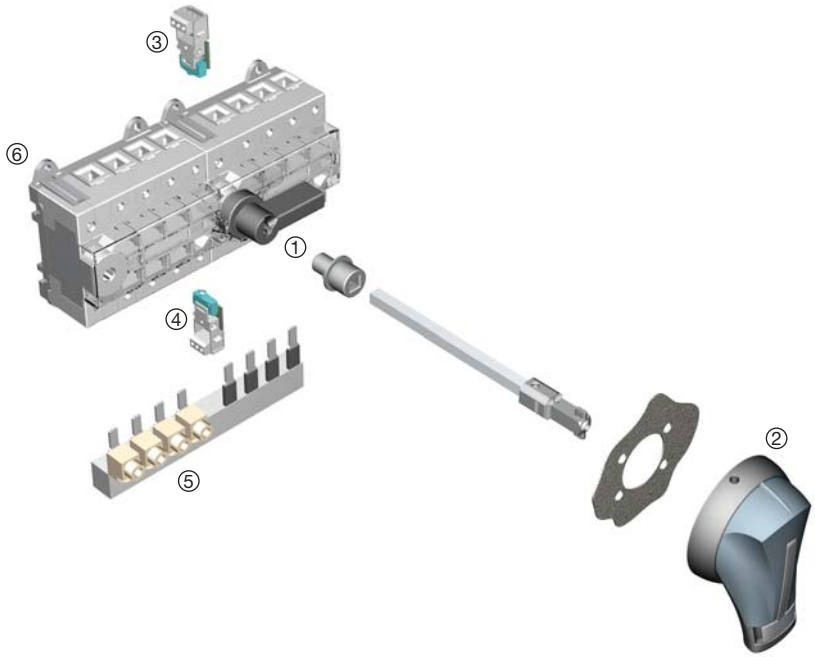

comut_021_a_1_x_cat

Overview (for futher details, please see the installation instructions supplied with each device).

1. Direct front handle.
2. Door interlocked external front handle.
3. and 4. Pre-break and signalling NO/NC auxiliary contact blocks.
5. Bridging bars.
6. Back plate mounting or DIN rail mounting.

This document is not a contract. SOCOMEC reserves the right to modify features without prior notice in view of continued improvement. 2008 - 2009

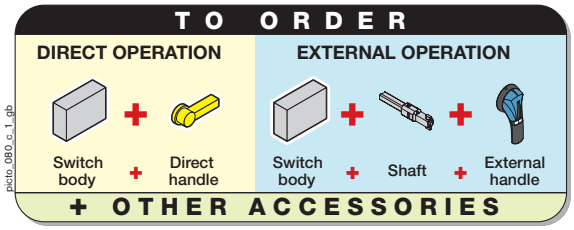

References

SIRCO VM1 changeover switches I-0-II

Rating (A)	No. of poles	Switch body only	Direct handle	Door interlocked external front handle[1]	Shaft extensions for external handle	IP20 bridging bars[2]	Auxiliary contacts
63	3 P	4430 **3006**[3]	Black 4439 **5012**	S1 type Black IP65 1413 **2113**	200 mm 1402 **0820** 320 mm 1402 **0832**	3 P 4499 **3006** 4 P 4499 **4006**	1 NO/NC changeover 4439 **0001**
	4 P	4430 **4006**[3]					
80	3 P	4430 **3008**[3]					
	4 P	4430 **4008**[3]					
100	3 P	4430 **3010**[3]					
	4 P	4430 **4010**[3]					
125	3 P	4430 **3012**					
	4 P	4430 **4012**					

(1) Padlockable in 0 position.
(2) IP: protection rating according to IEC 60529 standard.
(3) Available enclosed (see page A.91 "Steel enclosure for front operation").

SIRCO VM1 changeover switches I-I+II-II (overlapping)

Rating (A)	No. of poles	Switch body only	Direct handle	Door interlocked external front handle	Shaft extensions for external handle	IP20 bridging bars[1]
63	3 P	4440 **3006**[2]	Black 4449 **5012**	S1 type Black IP65 1413 **2114**	200 mm 1403 **0820** 320 mm 1403 **0832**	3 P 4499 **3006** 4 P 4499 **4006**
	4 P	4440 **4006**[2]				
80	3 P	4440 **3008**[2]				
	4 P	4440 **4008**[2]				
100	3 P	4440 **3010**[2]				
	4 P	4440 **4010**[2]				
125	3 P	4440 **3012**				
	4 P	4440 **4012**				

(1) IP: protection rating according to IEC 60529 standard.
(2) Available enclosed (see page A.91 "Steel enclosure for front operation").

For more informations: see "Accessories" pages.

This document is not a contract. SOCOMEC reserves the right to modify features without prior notice in view of continued improvement. 2008 - 2009

SIRCO VM1 changeover switches
63 to 125 A

Accessories

Direct handle

acces_111_a_1_cat

References

Rating (A)	Changeover operation type	References
63 … 125	I - 0 - II	4439 **5012**
63 … 125	I - I+II - II	4449 **5012**

Door interlocked external front handle

acces_149_a_1_cat

Use

The door interlocked external operation includes a padlockable handle, an escutcheon and must be combined with a shaft extension.

References

Rating (A)	Changeover operation type	Padlockable	External IP[1]	References
63 … 125	I - 0 - II	1 position	IP55	1411 **2113**
63 … 125	I - 0 - II	1 position	IP65	1413 **2113**
63 … 125	I - 0 - II	3 positions	IP65	1413 **2813**
63 … 125	I - I+II - II	1 position	IP65	1413 **2114**
63 … 125	I - I+II - II	3 positions	IP65	1413 **2814**

(1) IP: protection rating according to IEC 60529 standard.

S type handle adapter

acces_187_a_1_cat

Use

Enables new S type handles to be mounted using old fixing holes for replacement or retrofit applications.

Dimensions

Adds 12 mm to the depth.

Référence

Handle colour	External IP[1]	Pack qty	Reference
Black	IP65	10	1493 **0000**

(1) IP: protection rating according to IEC 60529 standard.

Alternative S type handle cover colours

acces_198_a_1_cat

Use

For single lever handle type S1.
Other colours: please consult us.

References

Handle colour	Pack qty	References
Light grey	50	1401 **0001**
Dark grey	50	1401 **0011**

Shaft extensions for external handle

acces_146_b_1_cat

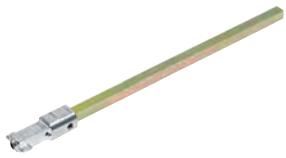

acces_202_a_1_cat

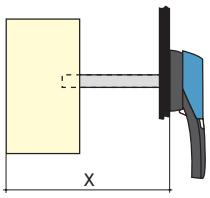

Use

For standard length:
- 200 mm,
- 320 mm.

Other lengths: please consult us.

References

In position I - 0 - II

Rating (A)	Dimension X (mm)	Shaft length (mm)	References
63 … 125	128 … 290	200	1402 **0820**
63 … 125	128 … 410	320	1402 **0832**

In position I - I+II - II

Rating (A)	Dimension X (mm)	Shaft length (mm)	References
63 … 125	128 … 290	200	1403 **0820**
63 … 125	128 … 410	320	1403 **0832**

This document is not a contract. SOCOMEC reserves the right to modify features without prior notice in view of continued improvement. 2008 - 2009

Accessories

IP20 bridging bars

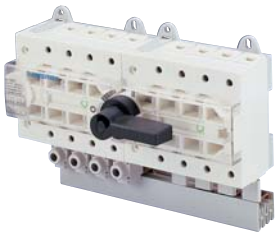

comut_005_a_1_cat

Use

Connects to the standard switch terminals in order to provide common bridging point.

Can be fitted to either top or bottom side of the switch.

References

Rating (A)	No. of poles	References
63 … 125	3 P	4499 **3006**
63 … 125	4 P	4499 **4006**

NO/NC changeover auxiliary contacts

Use

Pre-break and signalling of positions I and II: 1 NO/NC auxiliary contact for each position.

Characteristics

- Snaps on and is locked by a screw.
- Connector block with a capacity of up to 2 x 1.5 mm² per terminal.

Reference

Rating (A)	Changeover operation type	Contact (s)	Reference
63 … 125	I - 0 - II	1	4439 **0001** (1)

(1) Not suitable for overlapping changeover (I - I+II - II).

Steel enclosure for front operation

coff_293_b_1_cat

Functions

- Emergency breaking.
- Switching and source inversion.
- Switch-over under load.
- Breaking for mechanical maintenance.
- Safety isolation in the vicinity of any low voltage final circuit.

Conformity to standards

- IEC 60364
- EN 60204-1
- EN 60439
- EN 60695-2-11

General characteristics

- Adapted to mechanical risk and dust hazard.
- S-type black handle lockable in position 0.
- Protection degree: IP54 / Ik 9.
- Colour: polyester powder RAL 7035.
- Gland plates: top and bottom.
- Material: XC steel, thickness 1.5 mm.
- Coating: epoxy polyester powder.
- Wall mounting: 4 mounting brackets supplied (not mounted).
- Door: solid with hinges.
- Locking system: 3 mm double-bar key (key supplied).
- Miscellaneous: 2 earth connection points, double door locking.
- Note: supplied with incoming terminal screen only. Not supplied with bridging bars or outgoing terminal screen. For these items please see accessories section.

Connection

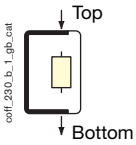

coff_230_b_1_gb_cat

References

Rating (A)	References
3 x 63	4413 **3006**
4 x 63	4413 **4006**
3 x 80	4413 **3008**
4 x 80	4413 **4008**
3 x 100	4413 **3010**
4 x 100	4413 **4010**

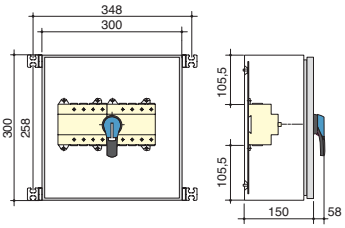

coff_317_a_1_x_cat

Dimensions

Rating (A)	Max. cond. section (mm²)	Weight (kg)
3 x 63 / 4 x 63	50	9
3 x 80 / 4 x 80	50	10
3 x 100 / 4 x 100	50	16

This document is not a contract. SOCOMEC reserves the right to modify features without prior notice in view of continued improvement. 2008 - 2009

SIRCO VM1 changeover switches
63 to 125 A

Characteristics (according to IEC 60947-3)

Thermal current I_{th} (40°C)		63 A	80 A	100 A	125 A
Rated insulation voltage U_i (V)		800	800	800	800
Rated impulse withstand voltage U_{imp} (kV)		8	8	8	8
Rated operational currents I_e (A)					
Rated voltage	Load duty category	A/B(1)	A/B(1)	A/B(1)	A/B(1)
400 VAC	AC-21 A / AC-21 B	63/63	80/80	100/100	125/125
	AC-22 A / AC-22 B	63/63	80/80	100/100	125/125
	AC-23 A / AC-23 B	63/63	63/63	63/63	63/63
690 VAC(2)	AC-20 A / AC-20 B	63/63	80/80	100/100	125/125
	AC-21 A / AC-21 B	63/63	80/80	80/80	80/80
	AC-22 A / AC-22 B	40/40	40/40	40/40	40/40
	AC-23 A / AC-23 B	25/25	25/25	25/25	25/25
220 VDC(3)	DC-20 A / DC-20 B	63/63	80/80	100/100	125/125
	DC-21 A / DC-21 B	63/63	80/80	100/100	125/125
	DC-22 A / DC-22 B	63/63	80/80	100/100	100/100
	DC-23 A / DC-23 B	63/63	63/63	63/63	63/63
Operational power (kW)(1)(4)					
At 400 VAC without pre-break AC in AC-23		30/30	30/30	30/30	30/30
At 690 VAC without pre-break AC in AC-23		22/22	22/22	22/22	22/22
At 400 VAC with pre-break AC		30/30	40/40	51/51	63/63
At 690 VAC with pre-break AC		33/33	33/33	33/33	33/33
Reactive power (kvar)(4)					
At 400 VAC		28	37	45	55
Fuse protected short-circuit withstand (kA rms prospective)(5)					
Prospective short-circuit current (kA rms)		100	100	100	50
Associated fuse rating (A)		63	80	100	125
Overload capacity					
Rated short-time withstand current 0.3 s. I_{cw} (kA eff.)		4.5	4.5	4.5	4.5
Short-circuit making capacity (kA peak) (5)		12	12	12	12
Connection					
Minimum Cu cable section (mm²)		4	4	4	4
Maximum Cu cable section (mm²)		50	50	50	50
Min. tightening torque (Nm)		6	6	6	6
Mechanical characteristics					
Endurance (number of operating cycles) (6)		10 000	10 000	10 000	10 000
Weight of 3 P switch (kg)		1.2	1.2	1.4	1.4
Weight of 4 P switch (kg)		1.4	1.4	1.6	1.6

(1) A/B: Category with index A = frequent operation - Category with index B = infrequent operation.
(2) With terminal shrouds or phase barrier.
(3) 4-pole device with 2 pole in series by polarity.
(4) The power value is given for information only, the current values vary from one manufacturer to another.
(5) For a rated operating voltage U_e = 400 VAC.
(6) Increased endurances: please consult us.

This document is not a contract. SOCOMEC reserves the right to modify features without prior notice in view of continued improvement. 2008 - 2009

Dimensions

• SIRCO VM1 changeover switches 63 to 125 A

Direct front operation

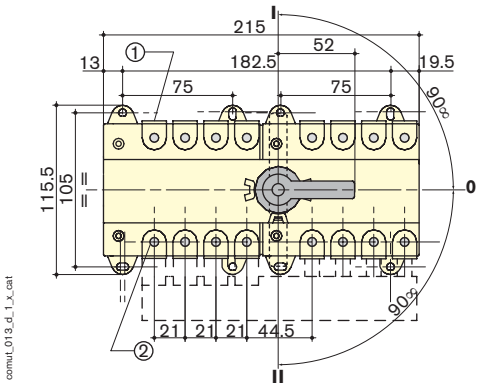

External front operation

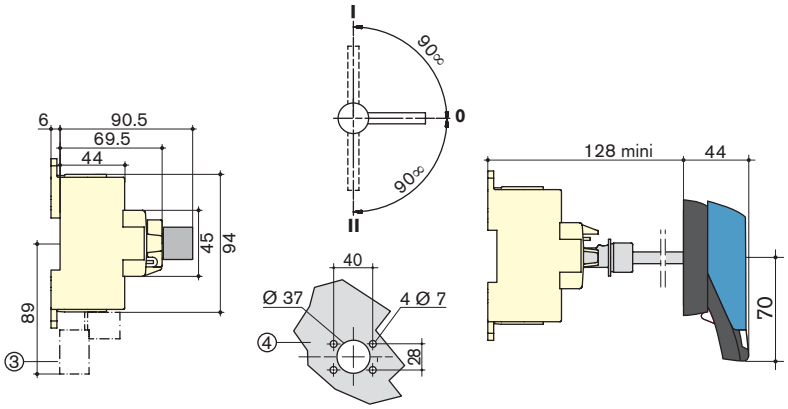

1. Max. connection:
   - Rigid: 50 mm²
   - Flexible: 35 mm ²
2. 6 -sided 5 - Pozidrive no. 1 slot 4.5 mm
3. Bridging bars
4. Mounting by 2 or 4 screws Ø 7 mm

This document is not a contract. SOCOMEC reserves the right to modify features without prior notice in view of continued improvement. 2008 - 2009

SIRCOVER and SIRCOVER BY-PASS
125 to 3200 A

Fonctions
References
Accessories
Enclosed changeover switches
Characteristics
Dimensions

SIRCOVER 3 pole

svr_099_a_1_cat

SIRCOVER BY-PASS 4 pole

svr_119_a_1_cat

Functions

SIRCOVER products are manually operated multipolar changeover switches.
They ensure switching, transfer of sources or transfer of two low voltage circuits on load as well as their safety disconnection.

SIRCOVER BY-PASS are manually operated changeover switches.
They are a combination of three interlocked switches enabling the use with 3 + 6 pole or 4 + 8 pole.
They insulate by providing simultaneous safety isolation top and bottom and by passing loads or low voltage circuits mainly during maintenance operations.

Conformity to standards

- IEC 60947-3
- EN 60947-3
- VDE 0660-107 (1992)
- NBN EN 60947-3
- BS EN 60947-3

Approvals and certifications(1)

- Bureau Véritas
- BBJ Poland (attestation of verification)

(1) In progress for certain ratings.

General characteristics

- 3 stable positions (I, 0, II) or overlapping contacts on request (I, I+II, II) , and on load changeover switching (AC-22 and AC-23).
- Fully visible breaking.
- IP20 device and accessories.

Available on request

- Devices 6 or 8 pole.
- For SIRCOVER BY-PASS, devices with overlapping (make before break) contacts (I, I+II, I).
- Devices with over-sized neutral e.g.: 3 x 250 A + N 400 A.
- Devices with advanced neutral.

This document is not a contract. SOCOMEC reserves the right to modify features without prior notice in view of continued improvement. 2008 - 2009

Illustrations

• **SIRCOVER 125 to 3 200 A**

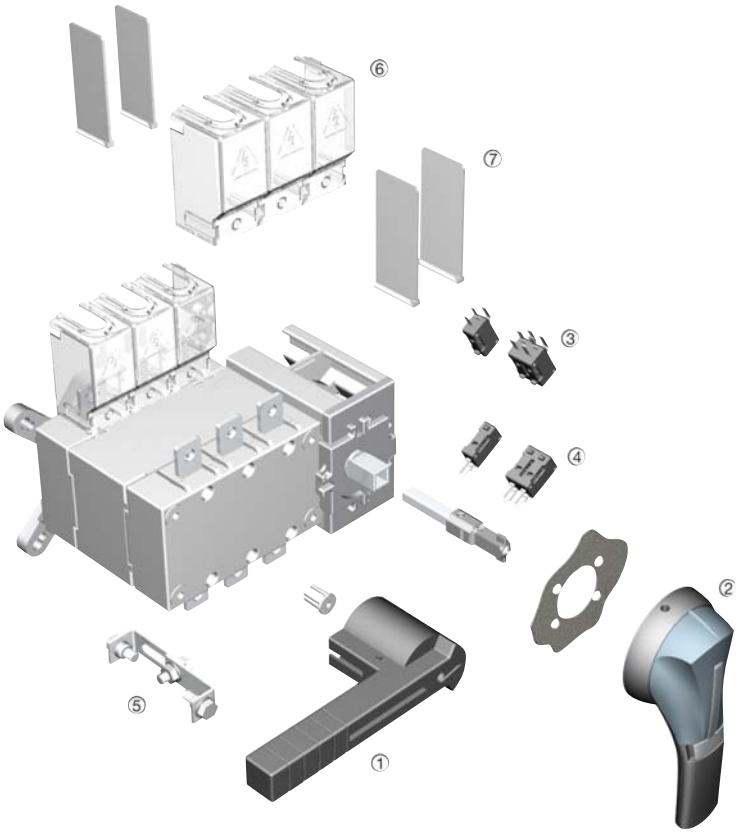

svr_103_a_1_x_cat

Overview (for further details, please see the installation instructions supplied with each device).

1. Direct front handle.
2. Door interlocked external front handle.

3 and 4. Auxiliary contacts.

5. Bridging bar.
6. Terminal shrouds.
7. Inter phase barrier.

Typical application

• **SIRCOVER BY-PASS 125 to 1600 A**

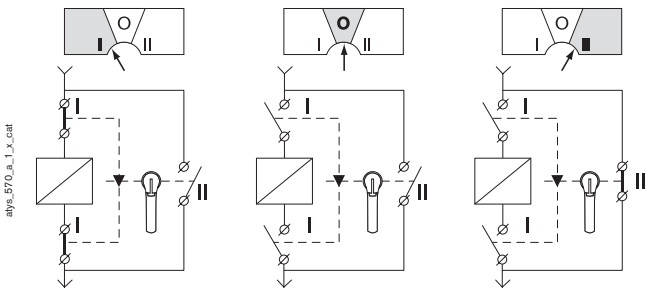

atys_570_a_1_x_cat

SIRCOVER BY-PASS (I, 0, II)

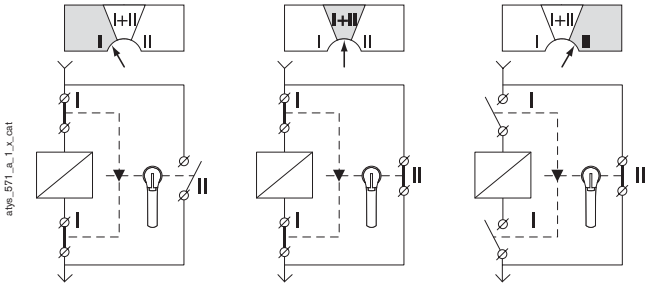

atys_571_a_1_x_cat

SIRCOVER BY-PASS with overlapping contacts (on request)

This document is not a contract. SOCOMEC reserves the right to modify features without prior notice in view of continued improvement. 2008 - 2009

SIRCOVER and SIRCOVER BY-PASS
125 to 3200 A

Fonctions
References
Accessories
Enclosed changeover switches
Characteristics
Dimensions

References

SIRCOVER I-0-II

swr_112_a_2_cat

Rating (A)	No. of poles	Switch body only	Direct handle	Door interlocked external handle	Shaft extensions for external handle	Bridging bars	Auxiliary contacts[1]	Terminal shrouds[2][3]	Terminal screens[4]
125	3 P	4100 **3013**[5]	Black* 4199 **5012**	S2 type Black IP55* 1421 **2113** Black IP65 1423 **2113**	200 mm 1400 **1020** 320 mm* 1400 **1032**	3 P 4109 **3019** 4 P 4109 **4019**	1st/2nd contact NO/NC 4109 **0021**	3 P 2694 **3014** 4 P 2694 **4014**	3 P 1509 **3012** 4 P 1509 **4012**
	4 P	4100 **4013**[5]							
160	3 P	4100 **3016**[5]							
	4 P	4100 **4016**[5]							
200	3 P	4100 **3019**							
	4 P	4100 **4019**							
250	3 P	4100 **3025**[5]				4109 **3025**		3 P 2694 **3021** 4 P 2694 **4021**	3 P 1509 **3025** 4 P 1509 **4025**
	4 P	4100 **4025**[5]				4109 **4025**			
400	3 P	4100 **3039**[5]				4109 **3039**			
	4 P	4100 **4039**[5]				4109 **4039**			
500	3 P	4100 **3050**[5]				4109 **3050**		3 P 2694 **3051** 4 P 2694 **4051**	3 P 1509 **3063** 4 P 1509 **4063**
	4 P	4100 **4050**[5]				4109 **4050**			
630	3 P	4100 **3063**[5]				4109 **3063**			
	4 P	4100 **4063**[5]				4109 **4063**			
800	3 P	4100 **3080**[5]	Black* 2799 **7052**	S4 type Black IP65* 1443 **3113**	200 mm 1401 **1520** 320 mm* 1401 **1532**	4109 **3080**		/	3 P 1509 **3080** 4 P 1509 **4080**
	4 P	4100 **4080**[5]				4109 **4080**			
1250	3 P	4100 **3120**[5]				4109 **3120**			
	4 P	4100 **4120**[5]				4109 **4120**			
1600	3 P	4100 **3160**[5]				3 P 4109 **3160** 4 P 4109 **4160**			3 P 1509 **3160** 4 P 1509 **4160**
	4 P	4100 **4160**[5]							
1800	3 P	4100 **3180**							
	4 P	4100 **4180**							
2000	3 P	4100 **3200**	Black* 2799 **7012**	Black IP65* 2799 **7146**	320 mm* 2799 **3018**	[6]	1st/2nd contact NO/NC standard		standard
	4 P	4100 **4200**							
2500	3 P	4100 **3250**							
	4 P	4100 **4250**							
3200	3 P	4100 **3320**							
	4 P	4100 **4320**							

** Standard. (1) 2 pieces supplied per kit, one for position I and one for position II. (2) To shroud front switch top and bottom 2 references required. (3) To fully shroud front, rear, top and bottom 4 references required. (4) One piece supplied per kit. To screen top and bottom 2 refs required. (5) Available enclosed (see page A.104 "Enclosed changeover switches"). (6) See page A.101 "Copper bars connection kits".*

For more informations: see "Accessories" pages.

This document is not a contract. SOCOMEC reserves the right to modify features without prior notice in view of continued improvement. 2008 - 2009

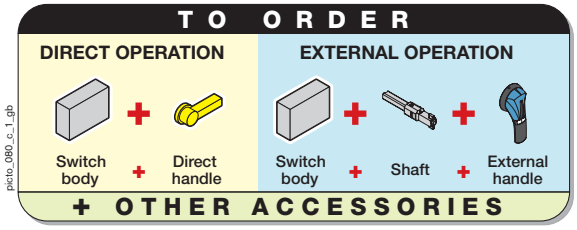

References

SIRCOVER I - I+II - II

Rating (A)	No. of poles	Switch body only	Direct handle	Door interlocked external handle[6]	Shaft extensions for external handle	Bridging bars	Auxiliary contacts[1]	Terminal shrouds[2][3]	Terminal screens[4]
125	3 P	4190 **3013**[5]	Black* 4199 **5012**	S2 type Black IP65* 1423 **2114**	200 mm 1400 **1020** 320 mm* 1400 **1032**	3 P 4109 **3019** 4 P 4109 **4019**	1st/2nd contact NO/NC 4109 **0021**	3 P 2694 **3014** 4 P 2694 **4014**	3 P 1509 **3012** 4 P 1509 **4012**
	4 P	4190 **4013**[5]							
160	3 P	4190 **3016**[5]							
	4 P	4190 **4016**[5]							
200	3 P	4190 **3019**							
	4 P	4190 **4019**							
250	3 P	4190 **3025**[5]				4109 **3025**		3 P 2694 **3021** 4 P 2694 **4021**	3 P 1509 **3025** 4 P 1509 **4025**
	4 P	4190 **4025**[5]				4109 **4025**			
400	3 P	4190 **3039**[5]				4109 **3039**			
	4 P	4190 **4039**[5]				4109 **4039**			
500	3 P	4190 **3050**[5]				4109 **3050**		3 P 2694 **3051** 4 P 2694 **4051**	3 P 1509 **3063** 4 P 1509 **4063**
	4 P	4190 **4050**[5]				4109 **4050**			
630	3 P	4190 **3063**[5]				4109 **3063**			
	4 P	4190 **4063**[5]				4109 **4063**			
800	3 P	4190 **3080**[5]	Black* 2799 **7052**	S4 type Black IP65* 1443 **3114**	200 mm 1401 **1520** 320 mm* 1401 **1532**	4109 **3080**		/	3 P 1509 **3080** 4 P 1509 **4080**
	4 P	4190 **4080**[5]				4109 **4080**			
1250	3 P	4190 **3120**[5]				4109 **3120**			
	4 P	4190 **4120**[5]				4109 **4120**			
1600	3 P	4190 **3160**[5]				3 P 4109 **3160**			3 P 1509 **3160**
	4 P	4190 **4160**[5]				4 P 4109 **4160**			4 P 1509 **4160**
1800	3 P	4190 **3180**							
	4 P	4190 **4180**							

** Standard.*
(1) 2 pieces supplied per kit, one for position I and one for position II.
(2) To shroud front switch top and bottom 2 references required.
(3) To fully shroud front, rear, top and bottom 4 references required.
(4) One piece supplied per kit. To screen top and bottom 2 refs required.
(5) Available enclosed (see page A.104 "Enclosed changeover switches").
(6) Please note handle padlocks in centre position (I + II).

For more informations: see "Accessories" pages.

This document is not a contract. SOCOMEC reserves the right to modify features without prior notice in view of continued improvement. 2008 - 2009

SIRCOVER and SIRCOVER BY-PASS

125 to 3200 A

Fonctions
References
Accessories
Enclosed changeover switches
Characteristics
Dimensions

References

SIRCOVER BY-PASS

Rating (A)	No. of poles	Switch body only I-0-II	Direct handle	Door interlocked external handle	Shaft extensions for external handle	Bridging bars	Auxiliary contacts[1]	Terminal shrouds[2][3]	Terminal screens[4]
125	3 + 6 P	4100 **7013**[5]	Black* 4199 **5012**	S2 type Black IP55* 1421 **2113** Black IP65 1423 **2113**	200 mm 1400 **1020** 320 mm* 1400 **1032**	3 P 4109 **3019** 4 P 4109 **4019**	1st/2nd contact NO/NC 4109 **0021**	3 P 2694 **3014** 4 P 2694 **4014**	3 P 1509 **3012** 4 P 1509 **4012**
	4 + 8 P	4100 **9013**[5]							
160	3 + 6 P	4100 **7016**[5]							
	4 + 8 P	4100 **9016**[5]							
200	3 + 6 P	4100 **7019**							
	4 + 8 P	4100 **9019**							
250	3 + 6 P	4100 **7025**[5]	Black* 2799 **7052**	S3 type Black IP65* 1433 **3113**	200 mm 1401 **1520** 320 mm* 1401 **1532**	4109 **3025**		3 P 2694 **3021** 4 P 2694 **4021**	3 P 1509 **3025** 4 P 1509 **4025**
	4 + 8 P	4100 **9025**[5]				4109 **4025**			
400	3 + 6 P	4100 **7039**[5]				4109 **3039**			
	4 + 8 P	4100 **9039**[5]				4109 **4039**			
500	3 + 6 P	4100 **7050**[5]				4109 **3050**		3 P 2694 **3051** 4 P 2694 **4051**	3 P 1509 **3063** 4 P 1509 **4063**
	4 + 8 P	4100 **9050**[5]				4109 **4050**			
630	3 + 6 P	4100 **7063**[5]				4109 **3063**			
	4 + 8 P	4100 **9063**[5]				4109 **4063**			
800	3 + 6 P	4100 **7080**[5]	Black* 2799 **7012**	Black IP65* 4199 **7146**	200 mm 2799 **3015** 450 mm* 2799 **3019**	4109 **3080**		/	3 P 1509 **3080** 4 P 1509 **4080**
	4 + 8 P	4100 **9080**[5]				4109 **4080**			
1250	3 + 6 P	4100 **7120**[5]				4109 **3120**			
	4 + 8 P	4100 **9120**[5]				4109 **4120**			
1600	3 + 6 P	4100 **7160**[5]				4109 **3160**			1509 **3160**
	4 + 8 P	4100 **9160**[5]				4109 **4160**			1509 **4160**

** Standard.*
(1) 2 pieces supplied per kit, one for position I and one for position II.
(2) To shroud front switch top and bottom 3 references required.
(3) To fully shroud front, rear, top and bottom 6 references required.
(4) One piece supplied per kit. To screen top and bottom 2 refs required.
(5) Available enclosed (see page A.105 "Enclosed changeover switches").

For more informations: see "Accessories" pages.

This document is not a contract. SOCOMEC reserves the right to modify features without prior notice in view of continued improvement. 2008 - 2009

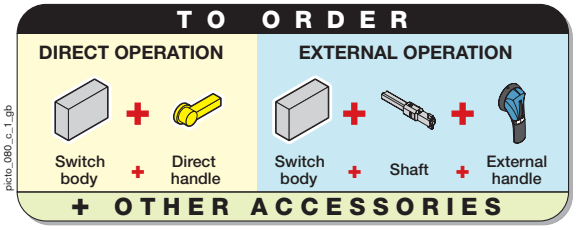

Accessories

Direct handle

acces_129_a_1_cat

acces_153_a_1_cat

References

SIRCOVER

Rating (A)	Handle colour	Handle type	References
125 … 630	Black	Single lever	4199 **5012**
800 … 1800	Black	Single lever	2799 **7052**
2000 … 3200	Black	Double lever	2799 **7012**

SIRCOVER BY-PASS

Rating (A)	Handle colour	Handle type	References
125 … 200	Black	Single lever	4199 **5012**
250 … 630	Black	Single lever	2799 **7052**
800 … 1600	Black	Double lever	2799 **7012**

Door interlocked external handle

acces_150_a_1_cat

S2-type handle

acces_151_a_1_cat

S3-type handle

acces_152_a_1_cat

S4-type handle

Use

The door interlocked external operation includes one lockable handle, one escutcheon and must be associated with a shaft extension.

References

SIRCOVER

Rating (A)	Changeover operation type	External IP(1)	Handle type	References
125 … 630	I - 0 - II	IP55	S2	1421 **2113**
125 … 630	I - 0 - II	IP65	S2	1423 **2113**
125 … 630	I - I+II - II	IP65	S2	1423 **2114**
800 … 1800	I - 0 - II	IP65	S4	1443 **3113**
800 … 1800	I - I+II - II	IP65	S4	1443 **3114**
2000 … 3200	I - 0 - II	IP65	-	2799 **7146**(2)

(1) IP: protection rating according to IEC 60529.
(2) Double lever handle.

SIRCOVER BY-PASS

Rating (A)	Changeover operation type	External IP(1)	Handle type	References
125 … 200	I - 0 - II	IP55	S2	1421 **2113**
125 … 200	I - 0 - II	IP65	S2	1423 **2113**
250 … 630	I - 0 - II	IP65	S3	1433 **3113**
800 … 1600	I - 0 - II	IP65	-	4199 **7146**

(1) IP: protection rating according to IEC 60529.

S type handle adapter

acces_187_a_1_cat

Use

Enables new S type handles to be mounted using old fixing holes for replacement or retrofit applications.

Dimensions

Adds 12 mm to the depth.

Référence

Handle colour	External IP	Pack qty	Reference
Black	IP65	10	1493 **0000**

Alternative S type handle cover colours

acces_198_a_1_cat

Use

For single lever handles S1, S2, S3 type and for double lever handle S4 type.

Others colours: please consult us.

References

Handle colour	Pack qty	Handle type	References
Light grey	50	S2, S3	1401 **0001**
Dark grey	50	S2, S3	1401 **0011**
Light grey	50	S4	1401 **0031**
Dark grey	50	S4	1401 **0041**

This document is not a contract. SOCOMEC reserves the right to modify features without prior notice in view of continued improvement. 2008 - 2009

SIRCOVER and SIRCOVER BY-PASS
125 to 3200 A

Fonctions
References
Accessories
Enclosed changeover switches
Characteristics
Dimensions

Accessories

Shaft extensions for external handle

acces_143_b_1_cat

acces_144_b_1_cat

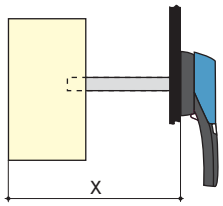

acces_202_a_1_x_cat

Use

Standard lenghts:
- 200 mm,
- 320 mm,
- 450 mm.

Other lengths: please consult us.

References

SIRCOVER

Rating (A)	Shaft length (mm)	Dimension X (mm)	References
125 … 400	200	210 … 310	1400 **1020**
125 … 400	320	210 … 430	1400 **1032**
500 … 630	200	280 … 390	1400 **1020**
500 … 630	320	280 … 510	1400 **1032**
800 … 1800	200	425 … 577	1401 **1520**
800 … 1800	320	425 … 697	1401 **1532**
2000 … 3200	320	653 … 923	2799 **3018**

SIRCOVER BY-PASS

Rating (A)	Shaft length (mm)	Dimension X (mm)	References
125 … 200	200	320 … 450	1400 **1020**
125 … 200	320	320 … 570	1400 **1032**
250 … 400	200	298 … 420	1401 **1520**
250 … 400	320	298 … 540	1401 **1532**
500 … 630	200	417 … 539	1401 **1520**
500 … 630	320	417 … 659	1401 **1532**
800 … 1600	200	550 … 680	2799 **3015**
800 … 1600	450	550 … 800	2799 **3019**

Bridging bars

acces_205_a_1_cat

SIRCOVER

acces_208_a_2_cat

SIRCOVER BY-PASS

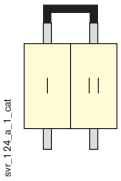

svr_124_a_1_cat

SIRCOVER

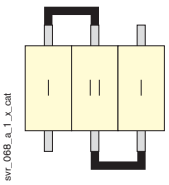

svr_068_a_1_x_cat

SIRCOVER BY-PASS

Use

Creation of a common link, on the top or bottom side of the switch, in order to feed load with either power supply I or/and II.

For SIRCOVER BY-PASS, two sets of bridging bars are needed as the switch is composed of three basic switch frames.

Position I: 6 or 8 poles.

Position II: 3 or 4 poles.

References

Rating (A)	No. of poles	Section (mm)	References
125 … 200	3 P	20 x 2.5	4109 **3019**
125 … 200	4 P	20 x 2.5	4109 **4019**
250	3 P	25 x 2.5	4109 **3025**
250	4 P	25 x 2.5	4109 **4025**
400	3 P	32 x 5	4109 **3039**
400	4 P	32 x 5	4109 **4039**
500	3 P	32 x 5	4109 **3050**
500	4 P	32 x 5	4109 **4050**
630	3 P	50 x 5	4109 **3063**
630	4 P	50 x 5	4109 **4063**
800	3 P	50 x 6	4109 **3080**
800	4 P	50 x 6	4109 **4080**
1250	3 P	60 x 8	4109 **3120**
1250	4 P	60 x 8	4109 **4120**
1600 ... 1800	3 P	90 x 10	4109 **3160**
1600 ... 1800	4 P	90 x 10	4109 **4160**
2000 ... 3200	3/4 P	-	(1)

(1) See page A.101 "Copper bars connection kits".

This document is not a contract. SOCOMEC reserves the right to modify features without prior notice in view of continued improvement. 2008 - 2009

Accessories

Copper bars connection kits

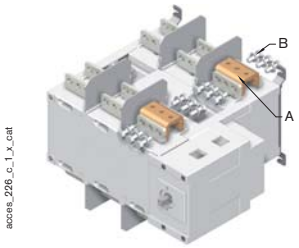

Fig.1

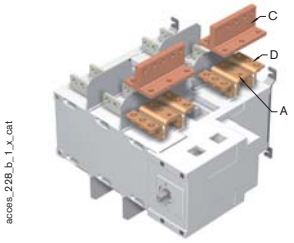

Fig.2

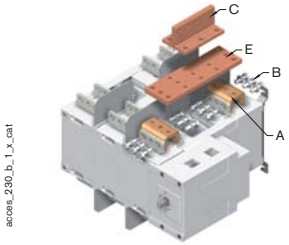

Fig.3

Use

To allow:

- connection between the two power terminals from a same pole for 2000 to 3200 A ratings (Fig. 1 and Fig 2),
- top or bottom bridging connection (Fig. 3).

For 3200 A rating, the connection piece (part A) are delivered bridged from factory.
Bolt sets must be ordered separately.

Dimensions

See page A.111, for connection kit assembly.

Technical notice for these specific accessories is downloadable from www.socomec.com

References

Top or bottom flat connection - Fig. 1

Rating (A)	Part	Qty to order per pole (1)	References
2000 … 2500	Connection piece - part A	2	2619 **1200**
2000 … 2500	Bolt set - part B	2	2699 **1200**
3200	Connection piece - part A	/	standard
3200	Bolt set - part B	2	2699 **1200**

Top or bottom edgewise connection - Fig. 2

Rating (A)	Part	Qty to order per pole (1)	References
2000 … 2500	Connection piece - part A	2	2619 **1200**
2000 … 2500	T piece - part C	2	2629 **1200** (2)
2000 … 2500	Right angle - part D	2	2639 **1200** (2)
3200	Connection piece - part A	/	standard
3200	T piece - part C	2	2629 **1200** (2)
3200	Right angle - part D	2	2639 **1200** (2)

Top or bottom bridging connection - Fig. 3

Rating (A)	Part	Qty to order per pole (1)	References
2000 … 2500	Connection piece - part A	2	2619 **1200**
2000 … 2500	Bolt set - part B	2	2699 **1200**
2000 … 2500	Bar - part E	1	4109 **0250** (2)
2000 … 2500	T piece - part C	1	2629 **1200** (2)
3200	Connection piece - part A	/	standard
3200	Bolt set - part B	2	2699 **1200**
3200	Bar - part E	1	4109 **0320** (2)
3200	T piece - part C	1	2629 **1200** (2)

(1) Example for 3-pole device equipped top only: order 3 times the quantities.
(2) Bolt set is provided with the accessories.

This document is not a contract. SOCOMEC reserves the right to modify features without prior notice in view of continued improvement. 2008 - 2009

SIRCOVER and SIRCOVER BY-PASS
125 to 3200 A

Fonctions
References
Accessories
Enclosed changeover switches
Characteristics
Dimensions

Accessories

Auxiliary contacts

acces_065_a_1_cat

svr_058_a_1_cat

Use
Pre breaking and positions I and II signalling: 1 or 2 NO/NC auxiliary contacts in each position.
Low level auxiliary contacts and more auxiliary contacts requirement: please, consult us.

Connection to control circuit
Via 6.35 mm fast-on tags.

Electrical characteristics
30 000 operations.

References
NO/NC auxiliary contact

Rating (A)	Contact (s)	References
125 … 1800	1st / 2nd	4109 **0021**
2000 … 3200	1st / 2nd	standard

Characteristics

Rating (A)	Nominal current (A)	Operating current I_e (A) 250 VAC AC-13	400 VAC AC-13	24 VDC DC-13	48 VDC DC-13
125 … 3200	16	12	8	14	6

Terminal shrouds

acces_206_a_1_cat

Use
Protection against direct contact with terminals or connecting parts.
Supplied as pair.

Advantage
Holes enable remote thermal checking without removing.

References

Rating (A)	No. of poles	Position	References
125 … 200	3 P	top / bottom / front (I) / rear (II)	2694 **3014**(1)(2)
125 … 200	4 P	top / bottom / front (I) / rear (II)	2694 **4014**(1)(2)
250 … 400	3 P	top / bottom / front (I) / rear (II)	2694 **3021**(1)(2)
250 … 400	4 P	top / bottom / front (I) / rear (II)	2694 **4021**(1)(2)
500 … 630	3 P	top / bottom / front (I) / rear (II)	2694 **3051**(1)(2)
500 … 630	4 P	top / bottom / front (I) / rear (II)	2694 **4051**(1)(2)

(1) To shroud front switch top and bottom 2 references required for SIRCOVER and 3 references required for SIRCOVER BY-PASS.
(2) To fully shroud front, rear, top and bottom 4 references required for SIRCOVER and 6 references required for SIRCOVER BY-PASS.

Terminal screens

acces_207_a_1_cat

Use
Top or bottom protection against direct contacts with terminals or connecting parts.

References

Rating (A)	No. of poles	Position	References
125 … 200	3 P	top or bottom	1509 **3012**
125 … 200	4 P	top or bottom	1509 **4012**
250 … 400	3 P	top or bottom	1509 **3025**
250 … 400	4 P	top or bottom	1509 **4025**
500 … 630	3 P	top or bottom	1509 **3063**
500 … 630	4 P	top or bottom	1509 **4063**
800 … 1250	3 P	top or bottom	1509 **3080**
800 … 1250	4 P	top or bottom	1509 **4080**
1600 ... 1800	3 P	top or bottom	1509 **3160**
1600 ... 1800	4 P	top or bottom	1509 **4160**
2000 ... 3200	3/4 P	top and bottom	standard

Inter phase barriers

acces_036_a_1_cat

Use
Safety isolating separation between the terminals, essential for use at 690 VAC or in a polluted or dusty atmosphere.
The terminal shrouds also provide phase separation from 125 to 630 A.

References

Rating (A)	No. of poles	References
125 … 200	3 P	2998 **0033** (1)
125 … 200	4 P	2998 **0034** (1)
250 … 400	3 P	2998 **0023** (1)
250 … 400	4 P	2998 **0024** (1)
500 … 630	3 P	2998 **0013** (1)
500 … 630	4 P	2998 **0014** (1)
800 … 3200	3/4 P	included

(1) Use 2 sets per side.

This document is not a contract. SOCOMEC reserves the right to modify features without prior notice in view of continued improvement. 2008 - 2009

Accessories

Handle key interlocking accessories

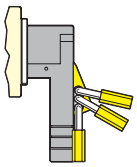
acces_061_a_1_x_cat

Fig. 1

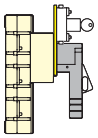
acces_001_a_1_x_cat

Fig. 2

acces_132_a_1_x_cat

Fig. 3

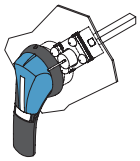
acces_158_a_1_x_cat

Fig. 4

Use

Can be locked in position 0 or in positions I, 0 or II of front operation:

- using padlock (not supplied) **(Fig.1)**.

This device is factory mounted in the direct or external handle. The lock escutcheon contains sections to be pushed out according to locking position required. However, locking in the 3 positions for external operation on the range requires special or handle;

- using a lock (not included) for direct operation using:
  - a special handle which receives the lock bolt on SIRCOVER 125 to 630 A **(Fig. 2)**,
  - a locking disk for SIRCOVER 800 to 3200 A **(Fig. 3)**;
- using a lock (not included) for external operation using:
  - a device which lifts the lock inside the cabinet door for SIRCOVER 125 to 630 A **(Fig. 4)**,
  - a locking disk for SIRCOVER 800 to 3200 A;
- using undervoltage coil for SIRCOVER 800 to 3200 A. Operation on SIRCOVER is only possible when coil is under voltage.

References

Lockable in position I, 0 or II

Rating (A) **SIRCOVER**	Rating (A) **SIRCOVER BY-PASS**	Operation	Figure	Reference
125 … 630	125 … 200	external	1	1423 **2813**

Locking using RONIS EL11AP lock in position 0 (not included)

Rating (A) **SIRCOVER**	Rating (A) **SIRCOVER BY-PASS**	Operation	Figure	References
125 … 630	125 … 200	direct	2	4109 **1006**(1)
	250 … 630	direct	3	consult us
800 … 1800	800 … 1600	direct	3	4109 **1004**(2)
2000 …3200		direct	3	4109 **2007**
125 … 1800	125 … 630	external	4	1499 **7701**
2000 … 3200	800 … 1600	external	4	2799 **7002**

Locking using RONIS EL11AP lock in positions I, 0, II (not included)

Rating (A) **SIRCOVER**	Rating (A) **SIRCOVER BY-PASS**	Operation	Figure	References
125 … 630	125 … 200	direct	2	4109 **1002**(1)
	250 … 630	direct	3	consult us
800 … 1800	800 … 1600	direct	3	4109 **1004**(2)
2000 … 3200		direct	3	4109 **2007**
125 … 630		external	4	1499 **7701**
	800 … 1600	external	4	2799 **7002**

Locking using 230 VAC undervoltage coil in position 0 (factory fitted)

Rating (A) **SIRCOVER**	Rating (A) **SIRCOVER BY-PASS**	Operation	Figure	Reference
800 … 3200	800 … 1600	direct	3	consult us

Locking using CASTELL type K lock (not included)

Rating (A) **SIRCOVER**	Rating (A) **SIRCOVER BY-PASS**	Operation	Figure	References
125 … 1800	125 … 630	external	4	1499 **7702**
2000 … 3200	800 … 1600	external	4	2799 **7003**

(1) Specific handle included.
(2) This locking facility can be configured by the user in the 3 positions.

Other specific accessories

bd_03_04_01

- Special protection screens (for specific dimensions or high ambiant temperatures).
- Phase barrier shields between terminals.
- Connection accessories.
- Low level auxiliary contacts.

This document is not a contract. SOCOMEC reserves the right to modify features without prior notice in view of continued improvement. 2008 - 2009

SIRCOVER and SIRCOVER BY-PASS
125 to 3200 A

Fonctions
References
Accessories
Enclosed changeover switches
Characteristics
Dimensions

Enclosed changeover switches

Steel enclosure for front operation

coff_298_a_2_cat

Functions
- Emergency breaking.
- Switching and source inversion.
- Switch-over under load.
- Breaking for mechanical maintenance.
- Safety isolation in the vicinity of any low voltage final circuit.

Conformity to standards
- IEC 60364
- EN 60204-1
- EN 60439
- EN 60695-2-11

General characteristics
- Adapted to mechanical risk and dust hazard.
- S-type black handle lockable in position 0.
- Protection degree: IP54 / Ik 9.
- Colour: RAL 7035 (rating ≤ 630 A), RAL 7032 (rating > 630 A).
- Gland plates: top and bottom.
- Material: XC steel (rating ≤ 630 A),
  electrozingue steel (rating > 630 A).
- Coating: epoxy powder (rating ≤ 630 A),
  polyester powder (rating > 630 A).
- Wall mounting: 4 mounting brackets supplied (not mounted).
- Door: solid with hinges.
- Locking system: 3 mm double-bar key (rating ≤ 630 A), 8 mm square key (rating > 630 A), key supplied.
- Miscellaneous: 2 earth connection points, double door locking.
- Note: supplied with incoming terminal screen only. Not supplied with bridging bars or outgoing terminal screen. For these items please see accessories section.

Connection

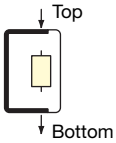

coff_230_b_1_gb_cat

References

Rating (A)	No. of poles	SIRCOVER I - 0 - II References	SIRCOVER I - I+II - II References
125	3 P	4212 **3012**	4116 **3012**
125	4 P	4212 **4012**	4116 **4012**
160	3 P	4212 **3016**	4116 **3016**
160	4 P	4212 **4016**	4116 **4016**
250	3 P	4212 **3025**	4116 **3025**
250	4 P	4212 **4025**	4116 **4025**
400	3 P	4212 **3040**	4116 **3040**
400	4 P	4212 **4040**	4116 **4040**
500	3 P	4212 **3050**	4116 **3050**
500	4 P	4212 **4050**	4116 **4050**
630	3 P	4212 **3063**	4116 **3063**
630	4 P	4212 **4063**	4116 **4063**
800	3 P	4212 **3080**	4116 **3080**
800	4 P	4212 **4080**	4116 **4080**
1250	3 P	4212 **3120**	4116 **3120**
1250	4 P	4212 **4120**	4116 **4120**
1600	3 P	4212 **3160**	4116 **3160**
1600	4 P	4212 **4160**	4116 **4160**

Dimensions

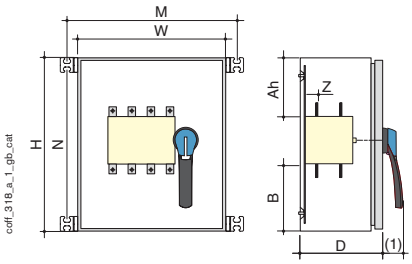

cdf_318_a_1_gb_cat

(1) 125… 630 A: 58 mm
800… 1600 A: 74 mm

Rating (A)	No. of poles	H x W x D (mm)	Max. cond section (mm²)	M	N	Z	Ah	B	Weight (kg)
125	3/4 P	500 x 400 x 250	50	448	458	28	190	190	23
160	3/4 P	500 x 400 x 250	95	448	458	28	190	190	23
250	3/4 P	500 x 400 x 250	150	448	458	29.3	185	185	23
400	3/4 P	800 x 600 x 300	240	758	552	29.3	330	330	45
500	3/4 P	800 x 600 x 300	240	648	658	45	298	298	55
630	3/4 P	800 x 600 x 300	2 x 300	648	658	45	290	290	55
630	3/4 P	700 x 600 x 400	2 x 300	648	658	64	243	237	53
1250	3/4 P	1200 x 700 x 500	4 x 185	740	1152	24	465	465	88
1600	3/4 P	1200 x 700 x 500	4 x 300	740	1152	-	470	470	94

This document is not a contract. SOCOMEC reserves the right to modify features without prior notice in view of continued improvement. 2008 - 2009

Enclosed changeover switches

Steel enclosure for front operation

coff_298_a_2_cat

Connection

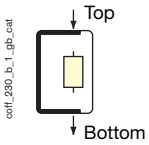

coff_230_b_1_gb_cat

Functions
- Emergency breaking.
- Switching and source inversion.
- Switch-over under load.
- Breaking for mechanical maintenance.
- Safety isolation in the vicinity of any low voltage final circuit.

Conformity to standards
- IEC 60364
- EN 60204-1
- EN 60439
- EN 60695-2-11

General characteristics
- Adapted to mechanical risk and dust hazard.
- S-type black handle lockable in position 0.
- Protection degree: IP54 / Ik 9.
- Colour: RAL 7032.
- Gland plates: top and bottom.
- Material: electrozingue steel.
- Coating: epoxy polyester powder.
- Wall mounting: 4 mounting brackets supplied (not mounted).
- Door: solid with hinges.
- Locking system: 3 mm double-bar key (rating ≤ 630 A), 8 mm square key (rating > 630 A), key supplied.
- Miscellaneous: 2 earth connection points, double door locking.
- Note: supplied with incoming terminal screen only. Not supplied with bridging bars or outgoing terminal screen. For these items please see accessories section.

References

Rating (A)	No. of poles	SIRCOVER BY-PASS I - 0 - II References
125	3+6 P	4119 **7012**
125	4+8 P	4119 **9012**
160	3+6 P	4119 **7016**
160	4+8 P	4119 **9016**
250	3+6 P	4119 **7025**
250	4+8 P	4119 **9025**
400	3+6 P	4119 **7040**
400	4+8 P	4119 **9040**
500	3+6 P	4119 **7050**
500	4+8 P	4119 **9050**
630	3+6 P	4119 **7063**
630	4+8 P	4119 **9063**
800	3+6 P	4119 **7080**
800	4+8 P	4119 **9080**
1250	3+6 P	4119 **7120**
1250	4+8 P	4119 **9120**
1600	3+6 P	4119 **7160**
1600	4+8 P	4119 **9160**

Dimensions

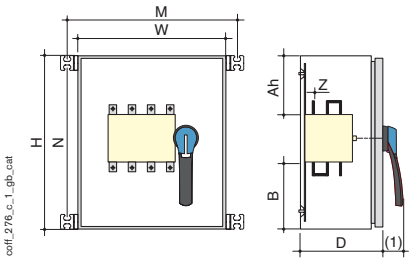

coff_276_c_1_gb_cat

(1) 125… 160 A: 58 mm
250… 630 A: 74 mm
800… 1600 A: 120 mm

Rating (A)	No. of poles	H x W x D (mm)	Max. cond section (mm²)	M	N	Z	Ah	B	Weight (kg)
125	3+6 / 4+8 P	500 x 400 x 350	50	448	452	47	192	192	*
160	3+6 / 4+8 P	500 x 400 x 350	95	448	452	47	192	192	*
250	3+6 / 4+8 P	800 x 600 x 500	150	640	752	48	335	335	*
400	3+6 / 4+8 P	800 x 600 x 500	240	640	752	48	330	330	*
500	3+6 / 4+8 P	800 x 600 x 550	240	640	752	64	297	297	*
630	3+6 / 4+8 P	800 x 600 x 550	2 x 300	640	752	64	290	290	*
800	3+6 / 4+8 P	1200 x 700 x 700	2 x 300	740	1152	24	466	466	*
1250	3+6 / 4+8 P	1200 x 700 x 700	4 x 185	740	1152	85.5	469	469	*
1600	3+6 / 4+8 P	1200 x 700 x 700	4 x 300	-	-	-	-	-	*

** Consult us.*

This document is not a contract. SOCOMEC reserves the right to modify features without prior notice in view of continued improvement. 2008 - 2009

SIRCOVER and SIRCOVER BY-PASS
125 to 3200 A

Enclosed changeover switches

Polyester enclosure for front operation

Functions
- Emergency breaking.
- Switching and source inversion.
- Switch-over under load.
- Breaking for mechanical maintenance.
- Safety isolation in the vicinity of any low voltage final circuit.

Conformity to standards
- IEC 60364
- EN 60204-1
- EN 60439
- EN 60695-2-11

General characteristics
- Adapted to chemical attack, dust hazard, contamination hazard and atmospheric corrosion.
- S-type black handle lockable in position 0.
- Protection degree: IP55 / Ik 10
- Colour: RAL 7035.
- Gland plates: none.
- Material: glass fibre reinforced polyester.
- Coating: none.
- Wall mounting: 4 mounting brackets supplied (not mounted).
- Locking system: screws (rating < 400 A), 3 mm double-bar key (rating ≥ 400 A), key supplied.
- Miscellaneous: good resistance to current creepage distance, good resistance to chemicals, self-extinguishing at 960°C, 2 earth connection points.
- Note: supplied with incoming terminal screen only. Not supplied with bridging bars or outgoing terminal screen. For these items please see accessories section.

Connection

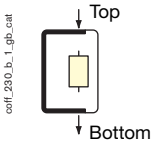

References

Rating (A)	No. of poles	SIRCOVER I - 0 - II References
125	3 P	4215 **3012**
125	4 P	4215 **4012**
160	3 P	4215 **3016**
160	4 P	4215 **4016**
250	3 P	4215 **3025**
250	4 P	4215 **4025**
400	3 P	4215 **3040**
400	4 P	4215 **4040**
630	3 P	4215 **3063**
630	4 P	4215 **4063**

Dimensions

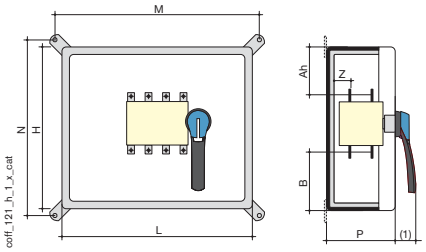

(1) 125… 630 A: 45 mm

Rating (A)	No. of poles	H x W x D (mm)	Max. cond section (mm²)	M	N	Z	Ah	B	Weight (kg)
125	3 P	540 x 270 x 233	50	272	542	28	210	210	9
125	4 P	540 x 360 x 233	50	362	542	28	210	210	10
160	3 P	540 x 270 x 233	95	272	542	28	210	210	9
160	4 P	540 x 360 x 233	95	362	542	28	210	210	10
250	3 P	540 x 360 x 233	150	362	542	29	205	205	11
250	4 P	540 x 360 x 233	150	362	542	29	205	205	12
400	3 P	800 x 600 x 300	240	620	796	29	330	330	30
400	4 P	800 x 600 x 300	240	620	796	29	330	330	31
630	3 P	800 x 600 x 300	2 x 300	620	796	45	297	297	38
630	4 P	800 x 600 x 300	2 x 300	620	796	45	297	297	40

This document is not a contract. SOCOMEC reserves the right to modify features without prior notice in view of continued improvement. 2008 - 2009

Characteristics (according to IEC 60947-3)

Thermal current I_{th} (40°C)		125 A	160 A	200 A	250 A	400 A	500 A	630 A
Rated insulation voltage U_i (V)		800	800	800	800	800	1000	1000
Rated impulse withstand voltage U_{imp} (kV)		8	8	8	8	8	12	12
Rated operation currents I_e (A)								
Rated voltage	Load duty category	A/B(1)	A/B(1)	A/B(1)	A/B(1)	A/B(1)	A/B(1)	A/B(1)
400 VAC	AC-21 A / AC-21 B	125/125	160/160	200/200	250/250	400/400	500/500	630/630
	AC-22 A / AC-22 B	125/125	160/160	200/200	250/250	400/400	500/500	630/630
	AC-23 A / AC-23 B	125/125	160/160	160/160	250/250	250/250	500/500	500/500
690 VAC(2)	AC-20 A / AC-20 B	125/125	160/160	200/200	250/250	400/400	500/500	630/630
	AC-21 A / AC-21 B	125/125	160/160	160/160	200/250	200/250	400/400	500/500
	AC-22 A / AC-22 B	125/125	125/125	125/125	125/160	125/160	250/315	315/315
	AC-23 A / AC-23 B	63/80	63/80	63/80	100/125	100/125	160/200	160/200
220 VDC	DC-20 A / DC-20 B	125/125	160/160	200/200	250/250	400/400	500/500	630/630
	DC-21 A / DC-21 B	125/125	160/160	160/160	250/250	250/250	500/500	630/630
	DC-22 A / DC-22 B	125/125	160/160	160/160	250/250	250/250	400/500	500/500
	DC-23 A / DC-23 B	125/125	125/125	125/125	200/200	200/200	400/400	500/500
440 VDC	DC-20 A / DC-20 B	125/125	160/160	200/200	250/250	400/400	500/500	630/630
	DC-21 A / DC-21 B	125(3)/125(3)	125(3)/125(3)	125(3)/125(3)	200(3)/200(3)	200(3)/200(3)	400(3)/400(3)	500(3)/500(3)
	DC-22 A / DC-22 B	125(3)/125(3)	125(3)/125(3)	125(3)/125(3)	200(3)/200(3)	200(3)/200(3)	315(3)/400(3)	500(3)/500(3)
	DC-23 A / DC-23 B	125(4)/125(4)	125(4)/125(4)	125(4)/125(4)	200(4)/200(4)	200(4)/200(4)	400(4)/400(4)	500(4)/500(4)
Operational power in AC-23 (kW)(1)(5)								
At 400 VAC without pre-break AC		63/63	80/80	80/80	132/132	132/132	280/280	280/280
At 690 VAC without pre-break AC		55/75	55/75	55/75	90/110	90/110	150/185	150/185
Reactive power (kvar)(5)								
At 400 VAC		55	75	90	115	185	230	290
Fuse protected short-circuit withstand (kA rms prospective)(6)								
Prospective short-circuit current (kA rms)		100	100	50	50	18	100	70
Associated fuse rating (A)		125	160	200	250	400	500	630
Overload capacity								
Rated short-time withstand current 0.3 s. I_{cw} (kA rms)		15	15	15	17	17	25	25
Rated peak withstand current (kA peak)(6)		20	20	20	30	30	45	45
Connection								
Minimum Cu cable section (mm^2)		35	50	50	95	185	240	2 x 150
Minimum Cu busbar section (mm^2)		-	-	-	-	-	-	2 x 30 x 5
Maximum Cu cable section (mm^2)		50	95	95	150	240	240	2 x 300
Maximum Cu busbar width (mm)		25	25	25	32	32	40	50
Min. tightening torque (Nm)		9	9	9	20	20	20	20
Mechanical characteristics								
Endurance (number of operating cycles) (7)		10 000	10 000	10 000	10 000	10 000	5 000	5 000
Weight of 3 P switch (kg) (8)		1.5	1.6	1.8	2	3	3.5	3.5
Weight of 4 P switch (kg) (8)		1.6	1.7	1.9	2.1	3.5	4	4

(1) A/B: Category with index A = frequent operation - Category with index B = infrequent operation.
(2) With terminal shrouds or phase barrier.
(3) 3-pole device with 2 pole in series for the + and 1 pole for the -.
(4) 4-pole device with 2 pole in series by polarity.
(5) The power value is given for information only, the current values vary from one manufacturer to another.
(6) For a rated operating voltage U_e = 400 VAC.
(7) Increased endurances: please consult us.
(8) For BY-PASS switches increase weight by 50 %.

This document is not a contract. SOCOMEC reserves the right to modify features without prior notice in view of continued improvement. 2008 - 2009

SIRCOVER and SIRCOVER BY-PASS
125 to 3200 A

Characteristics (according to IEC 60947-3)

Thermal current I_{th} (40°C)		800 A	1250 A	1600 A	1800 A	2000 A	2500 A	3200 A
Rated insulation voltage U_i (V)		1000	1000	1000	1000	1000	1000	1000
Rated impulse withstand voltage U_{imp} (kV)		12	12	12	12	12	12	12
Rated operation currents I_e (A)								
Rated voltage	Load duty category	A/B(1)	A/B(1)	A/B(1)	A/B(1)	A/B(1)	A/B(1)	A/B(1)
400 VAC	AC-21 A / AC-21 B	800/800	1250/1250	1600/1600	1800/1800	2000/2000	2500/2500	3200/3200
	AC-22 A / AC-22 B	800/800	1250/1250	1600/1600	1800/1800	2000/2000	2000/2500	2500/3200
	AC-23 A / AC-23 B	800/800	1250/1250	1250/1250	1250/1250	1600/1600	1600/1600	1600/1600
690 VAC(2)	AC-20 A / AC-20 B	800/800	1250/1250	1600/1600	1800/1800	2000/2000	2500/2500	3200/3200
	AC-21 A / AC-21 B	800/800	800/800	1000/1000	1000/1000	2000/2000	2000/2500	2000/2500
	AC-22 A / AC-22 B	800/800	800/800	1000/1000	1000/1000	1000/1000	1000/1000	1000/1000
	AC-23 A / AC-23 B	200/250	200/250	500/500	500/500	800/800	800/800	800/800
220 VDC	DC-20 A / DC-20 B	800/800	1250/1250	1600/1600	1800/1800	2000/2000	2500/2500	3200/3200
	DC-21 A / DC-21 B	800/800	1250/1250	1250/1250	1250/1250	2000/2000	2000/2500	2000/2500
	DC-22 A / DC-22 B	800/800	1250/1250	1250/1250	1250/1250	1250/1600	1250/1600	1250/1600
	DC-23 A / DC-23 B	800/800	1250/1250	1250/1250	1250/1250	1250(3)/1250(3)	1250(3)/1250(3)	1250(3)/1250(3)
440 VDC	DC-20 A / DC-20 B	800/800	1250/1250	1600/1600	1800/1800	2000/2000	2500/2500	3200/3200
	DC-21 A / DC-21 B	800(3)/800(3)	1250(3)/1250(3)	1250(3)/1250(3)	1250(3)/1250(3)	2000/2000	2000/2000	2000/2000
	DC-22 A / DC-22 B	800(3)/800(3)	1250(3)/1250(3)	1250(3)/1250(3)	1250(3)/1250(3)	1250(3)/1250(3)	1250(3)/1250(3)	1250(3)/1250(3)
	DC-23 A / DC-23 B	800(3)/800(3)	1250(3)/1250(3)	1250(3)/1250(3)	1250(3)/1250(3)	1000(3)/1000(3)	1000(3)/1000(3)	1000(3)/1000(3)
Operational power in AC-23 (kW)(1)(4)								
At 400 VAC without pre-break AC		450/450	710/710	710/710	710/710	710/710	710/710	710/710
At 690 VAC without pre-break AC		185/220	185/220	475/475	475/475	750/750	750/750	750/750
Reactive power (kvar)(4)								
At 400 VAC		365	575	-	-	-	-	-
Fuse protected short-circuit withstand (kA rms prospective)(5)								
Prospective short-circuit current (kA rms)		50	100	100	100	100	100	-
Associated fuse rating (A)		800	1250	2 x 800	2 x 800	2 x 1000	2 x 1250	-
Overload capacity								
Rated short-time withstand current 0.3 s. I_{cw} (kA rms)		50	65	100	100	100	100	110
Rated peak withstand current (kA peak)(5)		55	80	110	110	110	110	120
Connection								
Minimum Cu cable section (mm²)		2 x 185	-	-	-	-	-	-
Minimum Cu busbar section (mm²)		2 x 40 x 5	2 x 60 x 5	2 x 80 x 5	2 x 80 x 5	3 x 100 x 5	4 x 100 x 5	4 x 100 x 5
Maximum Cu cable section (mm²)		2 x 300	4 x 185	6 x 185	6 x 185	-	-	-
Maximum Cu busbar width (mm)		63	63	100	100	125	125	125
Min. tightening torque (Nm)		-	20	40	40	40	40	40
Mechanical characteristics								
Endurance (number of operating cycles) (6)		3 000	3 000	4 000	4 000	3 000	3 000	3 000
Weight of 3 P switch (kg) (7)		17.5	22.5	34	34	50	50	50
Weight of 4 P switch (kg) (7)		21	27.5	42	42	60	60	60

(1) A/B: Category with index A = frequent operation - Category with index B = infrequent operation.
(2) With terminal shrouds or phase barrier.
(3) 4-pole device with 2 pole in series by polarity.
(4) The power value is given for information only, the current values vary from one manufacturer to another.
(5) For a rated operating voltage U_e = 400 VAC.
(6) Increased endurances: please consult us.
(7) For BY-PASS switches increase weight by 50 %.

This document is not a contract. SOCOMEC reserves the right to modify features without prior notice in view of continued improvement. 2008 - 2009

Dimensions

• SIRCOVER 125 to 1800 A

Direct front operation

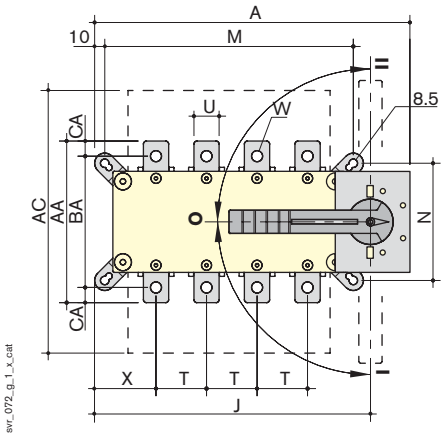

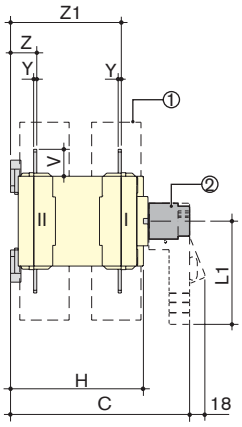

External front operation

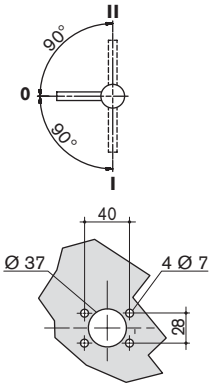

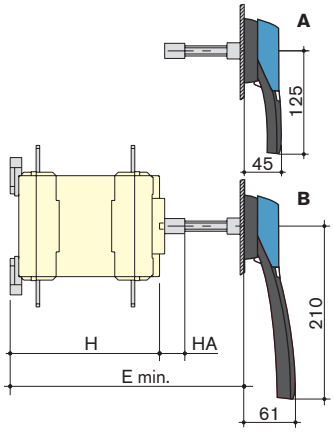

A. External handle S2 type: 125 to 630 A

B. External handle S3 type: 800 to 1800 A

1. Terminal shrouds
2. Direct handle:
   - 125 to 630 A: L1 = 140 mm
   - 800 to 1800 A: L1 = 210 mm

Rating (A)	Overall dimensions				Terminal shrouds	Switch body				Switch mounting			Connection terminals											
	A 3p	A 4p	C	E min.	AC	H	HA	J 3p	J 4p	M 3p	M 4p	N	T	U	V	W	X 3p	X 4p	Y	Z	Z1	AA	BA	CA
125	221	251	218	208 … 436	235	148	25	182	212	156	186	101	36	20	25	8,5	56	50	3.5	28	124	135	115	10
160	221	251	218	208 … 436	235	148	25	182	212	156	186	101	36	20	25	8,5	56	50	3.5	28	124	135	115	10
200	221	251	218	208 … 436	235	148	25	182	212	156	186	101	36	20	25	8,5	56	50	3.5	28	124	135	115	10
250	262	312	218	208 … 436	280	148	25	223	273	196	246	116	50	25	30	11	61	61	3.5	30	124	160	130	15
400	262	312	218	208 … 436	280	148	25	223	273	196	246	116	50	35	35	11	61	61	3.5	30	124	170	140	15
500	319	379	295	285 … 513	401	225	25	272	332	246	306	176	65	32	37	13	70.5	65.5	5	43	180	235	205	15
630	319	379	295	285 … 513	400	225	25	272	332	246	306	176	65	45	50	13	70.5	65.5	5	43	180	260	220	20
800	386	466	375	425 …577	459	298	29	306.5	386.5	255	335	250	80	50	60.5	15	48	48	7	66.5	253.5	321	-	26.5
1250	386	466	375	425 …577	459	298	29	306.5	386.5	255	335	250	80	60	65	16x11	48	48	7	66.5	255.5	330	-	29.5
1600	478	598	375	425 … 577	461	298	29	388.5	518.5	347	467	250	120	90	43.5	12.5 x 5	54	54	8	66.5	255.5	288	-	15
1800	478	598	375	425 … 577	461	298	29	388.5	518.5	347	467	250	120	90	43.5	12.5 x 5	54	54	8	66.5	255.5	288	-	15

• SIRCOVER 2000 to 3200 A

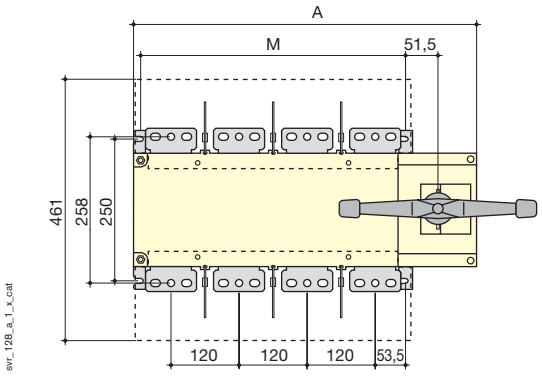

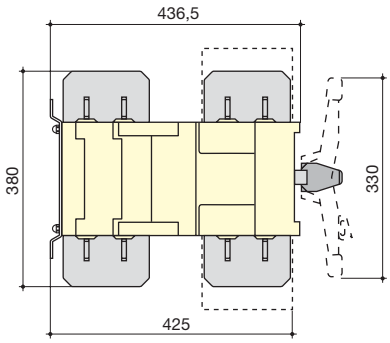

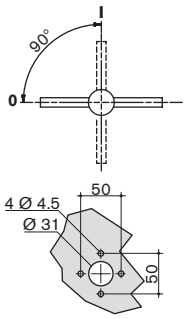

Rating (A)	Overall dimensions		Switch mounting	
	A 3p.	A 4p.	M 3p.	M 4p.
2000 ... 3200	478	598	347	467

This document is not a contract. SOCOMEC reserves the right to modify features without prior notice in view of continued improvement. 2008 - 2009

SIRCOVER and SIRCOVER BY-PASS
125 to 3200 A

Dimensions

• **SIRCOVER BY-PASS 125 to 1600 A**

Direct front operation

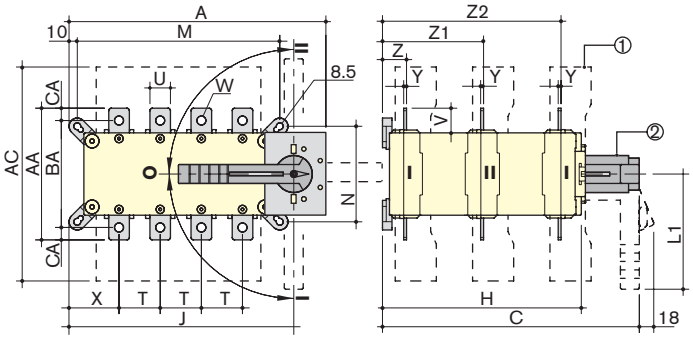

External front operation

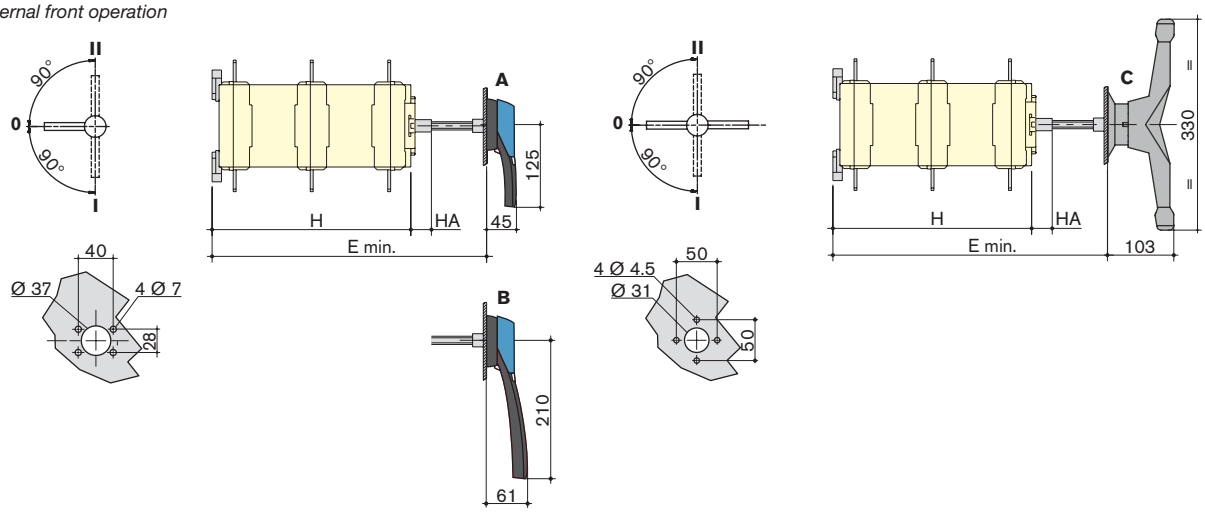

svr_070_h_1_x_cat

A. External handle S2 type: 125 to 200 A
B. External handle S3 type: 250 to 630 A
C. External double lever handle: 800 to 1600 A

1. Terminal shrouds
2. Direct handle:
   - 125 to 200 A: L1 = 140 mm
   - 250 to 630 A: L1 = 210 mm
   - 800 to 1600 A: L1 = Ø 330 mm

	Overall dimensions			Terminal shrouds			Switch body			Switch mounting			Connection terminals												
Rating (A)	A 3+6 p	A 4+8 p	C	E min.	AC	H	HA	J 3+6 p	J 4+8 p	M 3+6 p	M 4+8 p	N	T	U	V	W	X 3+6 p	X 4+8 p	Y	Z	Z1	Z2	AA	BA	CA
125	221	251	313	320	235	243	25	182	212	156	186	101	36	20	25	8.5	56	50	3.5	28	124	219	135	115	10
160	221	251	313	320	235	243	25	182	212	156	186	101	36	20	25	8.5	56	50	3.5	28	124	219	135	115	10
200	221	251	313	320	235	243	25	182	212	156	186	101	36	20	25	8.5	56	50	3.5	28	124	219	135	115	10
250	262	312	313	298	280	243	25	223	273	196	246	116	50	25	30	11	61	61	3.5	30	124	219	160	130	10
400	262	312	313	298	280	243	25	223	273	196	246	116	50	35	35	11	61	61	3.5	30	124	219	170	140	15
500	319	379	432	417	401	362	25	272	332	246	306	176	65	32	37	13	70.5	65.5	5	43	180	317	235	205	15
630	319	379	432	417	400	362	25	272	332	246	306	176	65	45	50	13	70.5	65.5	5	43	180	317	260	220	20
800	386	466	560	550	459	479	29	306.5	386.5	255	335	250	80	50	60.5	15	48	48	7	66.5	253.5	439.5	321	-	26.5
1250	386	466	560	550	459	479	29	306.5	386.5	255	335	250	80	60	65	16 x 11	48	48	7	66.5	253.5	439.5	320	-	29.25
1600	478	598	560	550	461	479	29	388.5	518.5	347	467	250	120	90	43.5	12.5 x 5	54	54	8	66.5	253.5	439.5	288	-	15

This document is not a contract. SOCOMEC reserves the right to modify features without prior notice in view of continued improvement. 2008 - 2009

Dimensions

Connection terminals

- SIRCOVER and SIRCOVER BY-PASS 800 A

svr_077_a_1_x_cat

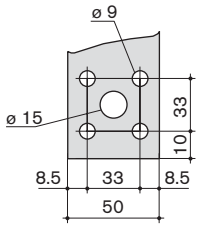

- SIRCOVER and SIRCOVER BY-PASS 1250 A

svr_078_b_1_x_cat

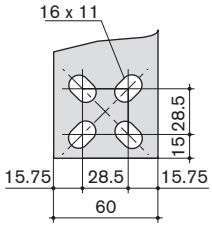

- SIRCOVER 1600 to 3200 A
  SIRCOVER BY-PASS 1600 A

svr_098_a_1_x_cat

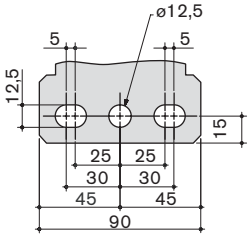

Door drilling with RONIS EL11AP lock

- SIRCOVER 125 to 1800 A
  SIRCOVER BY-PASS 125 to 630 A

svr_102_a_1_x_cat

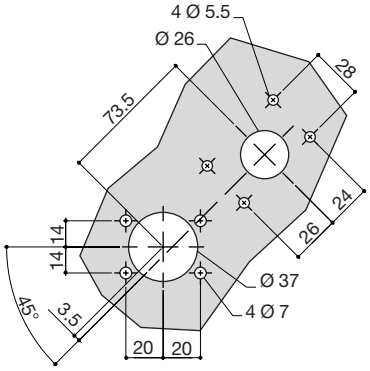

Door drilling with CASTELL K lock

- SIRCOVER 125 to 1800 A
  SIRCOVER BY-PASS 125 to 630 A

svr_101_a_1_x_cat

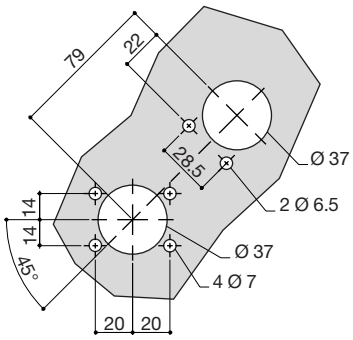

- SIRCOVER 2000 to 3200 A
  SIRCOVER BY-PASS 800 to 1600 A

sirco_224_b_1_x_cat

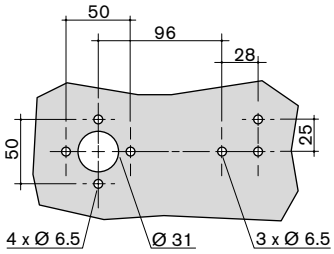

Copper bars connection kits

- Fig. 1

acces_226_c_2_cat

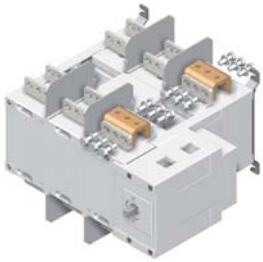

acces_232_a_1_cat

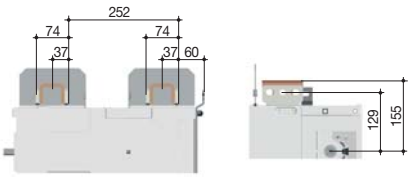

- Fig. 2

acces_229_b_2_cat

acces_233_a_1_cat

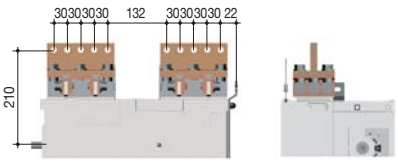

- Fig. 3

acces_231_a_1_cat

acces_234_a_1_cat

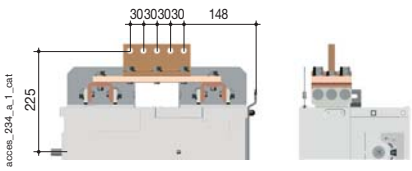

This document is not a contract. SOCOMEC reserves the right to modify features without prior notice in view of continued improvement. 2008 - 2009

SELECTION GUIDE

ATyS 63 to 3200 A

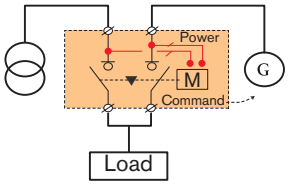

Example: between a transformer and a genset

APPLICATIONS	ATyS M 3s 63 to 160 A	ATyS M 6s 63 to 160 A	ATyS M 6e 63 to 160 A
Normal/backup transfer with an external automatic control	●		
Normal/backup transfer with an internal automatic control (ATS)		●	●
Load changeover	●		
External controller: Main/Main or Genset/Main applications			
External controller: Dual genset application			

CHARACTERISTICS			
AUXILIARY POWER SUPPLY			
Version 1 AC power supply			
Version 2 AC power supplies	•		
Version 1 DC power supply			
OPERATION			
Volt free auxiliary contacts for the I, 0, II positions	•		
Automatic for I, 0, II positions		•	•
MAN / AUT selector switch	•	•	•
MONITORING			
Main network : 3U		•	•
Emergency network: 3U		•	•
Main network: 1U			
Emergency network: 1U			
CONFIGURATION			
Choice of logic: contactor or impulse	•		
Upper and lower thresholds, associated hysteresis		•	•
Operating time delays		•	•
Network priority		•	•
FRONT DISPLAY			
Status of supplies, positions, commands, faults, padlocking		•	•
U			•
F			•
3I, P, Q, S, PF, In monitored			
CONTROL / OPERATION			
Position I and II auxiliary contacts	accessory	accessory	accessory
Position 0 auxiliary contacts	accessory	accessory	accessory
Padlock and MAN / AUT information auxiliary contacts			•
Generator start-up output auxiliary contacts		•	•
Fault relay output auxiliary contacts		•	•
RS485 (JBUS MODBUS®)			•
Input / Output			3 in / 3 out
REMOTE INTERFACE (ACCESSORY)			
ATyS D10 display device			•
ATyS D20 display and control device			•
PAGES	see page A.120	see page A.120	see page A.120

This document is not a contract. SOCOMEC reserves the right to modify features without prior notice in view of continued improvement. 2008 - 2009

	ATyS 3s 125 to 1800 A	ATyS 3e 125 to 3200 A	ATyS 6e 125 to 3200 A	ATyS 6m 125 to 3200 A	ATyS C30	ATyS C40	Bridging bars
	●	●					
			●	●			
	●	●					
					●		
						●	
							Voltage sensing and power supply kit
	•						
		•	•	•	•		
					•	•	
	•	•	•	•			
			•	•			
	•	•	•	•			
			•	•	•		
			•	•			
						•	
					•	•	
	•	•	•	•	•	•	
			•	•	•	•	
			•	•	•	•	
			•	•	•	•	
		•	•	•	•	•	
			•	•			
			•	•			
				•			
	•	•	•	•			
		•	•	•			
		•	•	•			
			•	•	•	•	
			•	•			
			accessory 2 in / 2 out	accessory 2 in / 2 out	2 in / 2 out	2 in / 1 out	ATyS VISION software
			•	•	•		
			•	•	•		
	see page A.120	see page A.120	see page A.120	see page A.120	see page A.146	see page A.146	see page A.148

see page A.125

This document is not a contract. SOCOMEC reserves the right to modify features without prior notice in view of continued improvement. 2008 - 2009

The ATyS range

Overview

The **ATyS** remote controlled and automatic transfer switch family proposes a complete range of low voltage compact changeover switches and accessories.
The new **ATyS M** family dedicated to applications below 160 A retains key features and characteristics of the existing **ATyS** product range bringing some innovation.

ATyS range is now also available up to 3200A to complete the family for higher current applications.

ATyS are composed of two mechanically and electrically interlocked switches.
All the products are fitted with **emergency manual operation**.

- Either **remotely controlled**: **ATyS M 3** and **ATyS** 3 products are driven by volt-free dry contacts allowing switching operation between position I, 0 or II, from an external control logic or a plc (control relays type ATyS C30).

- Or **automaticaly controlled**: **ATyS M 6** and **ATyS** 6 are dedicated to break before make automatic transfer applications. They integrate control relays, timers and test functions to manage a Normal/Backup switching operation between 2 networks or a generator set and a network.

Operating principle

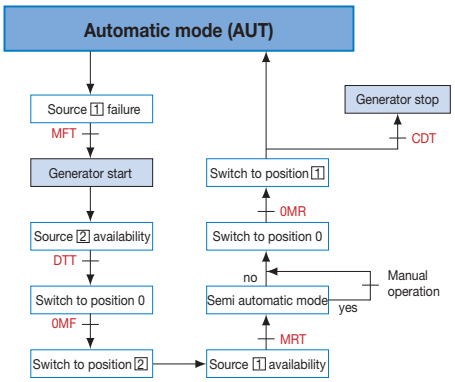

atys_028_d_1_gb_cat

Example (generator application):
Source 1: priority power source
Source 2: backup power source

Normal / Emergency Timers

- MFT: source 1 failure timer (0 to 60 s)
- DTT: delay to transfer on source 2 (only for genset) set timer (0 to 60 s)
- 0MF: 0 position stay before transfer "failure" (0 to 20 s)
- MRT: source 1 return timer before retransfer (0 to 3600 s)
- 0MR: 0 position stay before transfer "return" (0 to 20 s)
- CDT: cool down timer before generator set shutdown (0 to 600 s)

ATyS M: Modular automatic transfer switches from 63 to 160 A

Description

ATyS M electrical operation utilises coil technology to achieve fast transfer cycles.
ATyS M 6e brings a new innovative solution allowing the changeover to be driven into 0 position without any power supply available.

Main accessories

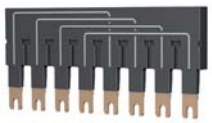

atysm_025_a_1_cat

Bridging bar
To provide a common connection point on the load side:
- insulated IP2x,
- leaves the cable terminals free by using a dedicated fixing location.

atysm_026_a_1_cat

Single phase voltage sensing tap
Allows up to 2x 1.5 mm². sensing cables connection on main power terminals keeping power cables capacity complete. They can be mounted in any of the power terminals but not simultaneously with the bridging bar.

atysm_027_a_1_cat

Terminal shroud
Provides protection against direct contact with the connection terminals or parts. A specific front hole enables access to terminals' tightening screws for thermographic measurement or voltage sensing.
The same accessory can be mounted on the incoming or outgoing side of the products.

atysm_028_a_1_cat

Auxiliary contacts
Each product can be equipped with 2 auxiliary contacts. It integrates one NO/NC contact per position (I, 0, II).
Characteristics: 250 VAC - 5A maximum.
As standard for ATyS M 3s.

atys_565_c_2_cat

Remote interfaces ATyS D10 or D20
To display source availability and changeover state on the front of a panel.
RJ45 cable connection between **ATyS M 6e** only, and ATyS D10 / D20.

atysm_043_a

Sealable cover
Controls settings cover to avoid **ATyS M 6s** parameters access due to a sealable facility.

This document is not a contract. SOCOMEC reserves the right to modify features without prior notice in view of continued improvement. 2008 - 2009

Manual operation

atysm_014_b_1_cat

AUT/ MAN sealable cover
Opening the front cover disables electrical or automatic operations and enables manual or padlocking facilities.

Indication of the front cover status (opened or closed) is available on the **ATyS M** via a dedicated auxiliary contact.

atysm_015_b_1_cat

Emergency manual operation
ATyS M products can be manually operated in any of the three available positions (I,0,II) using a standard allen key provided once the cover is opened.

atysm_016_b_1_cat

Padlocking facility
It is possible as standard to padlock the **ATyS M** product in 0 position.
3 positions padlocking is configurable on the product before its installation.

ATyS M enclosed range

coff_335_a_1_cat

Product range
- From 63 to 160 A.
- 230/400 VAC network +/- 20 % (standard).
- 127/230 VAC network for ATyS M 6e (on request).
- 3 or 4 wires applications.
- Protection degree: IP41 (standard), IP55 (optional).
- Colour: RAL 7035.
- Cable gland plate: top or bottom.
- Material: steel thickness 1.5 mm.
- Coating: epoxy polyester powder.
- Wall mouting: 4 wall mouting brackets supplied - not mounted.
- Door: solid with hinges, 45 mm cut out dimension, with glass for IP55 version.

ATyS M 3s: Remote controlled changeover

Power supply

ATyS M 3s is equipped with two independent 230 VAC (176-288 VAC), 50/60 Hz (45-65 Hz) power inputs.
- These two supplies can be individually connected to source I and source II power inputs:
  - power supply I must be available to reach position I,
  - power supply II must be available to reach position II.

The 0 position is in this type off control scheme only a transitory position.
- Use of a SOCOMEC DPS unit (Double Power Supply), or of an independent power supply will allow control of the product in any of the three positions as soon as power is available on the product power inputs.

atysm_029_b

Command

Positions command is realised via external volt free contacts (example ATyS C30 controller). Position remains stable in case of power supplies loss (switch technology).

Impulse control mode
- A minimum 30 ms impulse required.
- I and II commands have priority over 0 command (different from ATyS).
- The first command (order) received has priority for its duration.

Contactor control mode
- The 0 command must be maintained to enable contactor control mode (strap between 0 / C command and common terminal).
- In case of position I or position II command loss, the product returns to position 0 (only if the required power input to allow the operation is available).

Wiring diagram

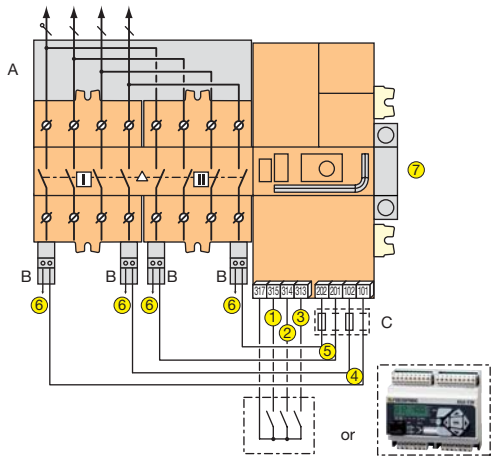

atysm_040_d_1_gb_cat

1 : control position I
2 : control position II
3 : control position 0 / C
4 : power supply I (230 VAC)
5 : power supply II (230 VAC)
6 : voltage tap
7 : auxiliary contacts - 1 AC per position I, 0, II (standard)

A : bridging bar (accessories)
B : single phase voltage sensing tap (accessories)
C : F1 / F2 = fuse 10 A gG

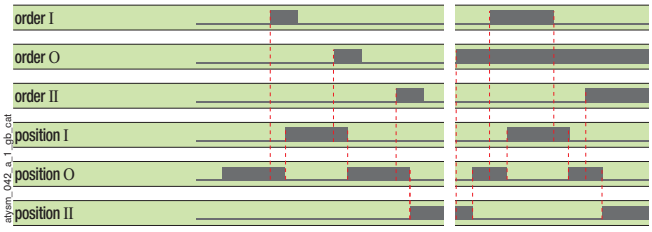

atysm_042_a_1_gb_cat

This document is not a contract. SOCOMEC reserves the right to modify features without prior notice in view of continued improvement. 2008 - 2009

The ATyS range

ATyS M 6: Automatic Transfer Switch

Characteristics

Power supply

ATyS M 6 products are self power supplied from incoming supplies: 230 VAC (176-288 VAC), 50/60 Hz (45-65 Hz).
Two different versions are available:
- 230 / 400 VAC with neutral conductor distributed: product is power supplied between phase and neutral,
- 127 / 230 VAC with or without neutral conductor distributed: product is power supplied between 2 phases.

The neutral conductor can be connected to the left or right side of each switch.

Return to 0 position feature (only on ATyS M 6e)

With **ATyS M 6e** it is possible to return automatically to the 0 position after a power supply loss.

An energy storage device enables return to the 0 position even with no voltage available on the power supply inputs.

Single phase or three phases voltage and frequency control on networks I and II

ATyS M 6s
- Linked over/under voltage and over/under frequency thresholds from 5 to 20% of Un and 3 to 10% of f_n.
- Hysteresis levels fixed at 80% of the set up threshold.

ATyS M 6e
- Independent over/under voltage and over/under frequency thresholds +/-20% of nominal values.
- Configurable associated hysterisis thresholds.
- Phase rotation and unbalance control.

Metering only on ATyS M 6e
- 3 phases voltage measurement on networks 1 and 2.
- Frequency measurement on networks 1 and 2.
- Timers display and count down.

Operation

ATyS M 6s

4 potentiometers
- Nominal voltage configuration.
- Voltage and frequency thresholds configuration.
- Operating cycles timers configuration: MFT (0 to 60s), DTT (5s), MRT (0 to 30 min), CDT (4 min).

4 dip switches
50 or 60 Hz, single or three phases, 2 seconds 0 position transition during I-II transfer cycles (0MR/0MF), Network / Network or Network / Genset application.

4 leds
Power supply sources availability; Automatic mode (cover opened); Fault (command order and position not reached).

3 external command inputs
- Automatic mode inhibition.
- Remote test on load (or priority change).
- Manual retransfer from emergency source to main source (validation required).
- Control 0 position if both supplies are available (1+2+3) at the same time.

1 NO bi-stable output relay for generator start /stop command (30 VDC / 2 A).

1 NO fault relay (250 VAC/ 0.5 A).

ATyS M 6e

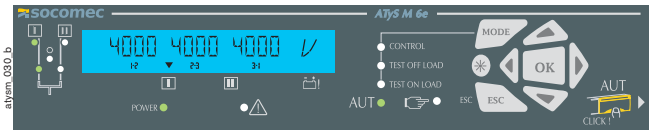

Display + Keypad
- Parameters configuration (thresholds, timers …).
- 3 phases voltage and frequency for source I and II, timers, number of cycles and last event display.
- Tests and positions control facilities.

Leds
Power On; Sources availability; Changeover position; "MAN / AUT" mode; Test / Control operation; Fault.

3 configurable inputs
Automatic mode inhibition; Test on load and off load; Manual retransfer; Changeover position control; Network priority change.

1 NO bi-stable output relay for generator start /stop command (30 VDC / 2 A).

2 programmable output relays (250 VAC / 3 A)
Source I or II availability; Load shedding output; Fault relay.

ATyS D10 or D20 remote interface connection.

Wiring diagram

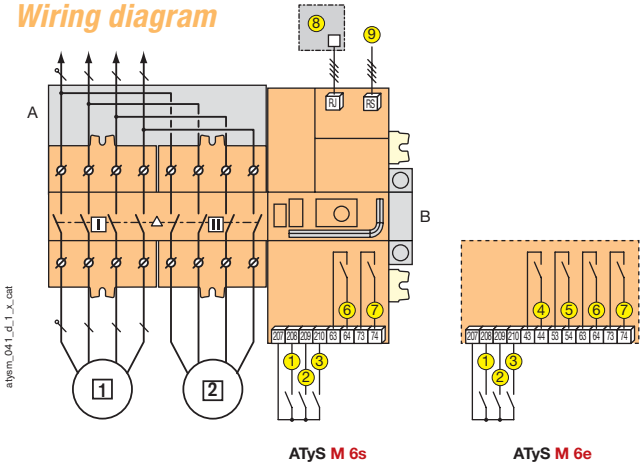

1 priority source / 2 backup source

ATyS M 6s
1: manual retransfer / priority change(1)
2: test on load(1)
3: automatic mode inhibition(1)
6: fault relay and front cover open
7: genset start / stop relay

(1) 1+2+3: control 0 position.

ATyS M 6e
1 - 2 - 3: programmable input
4: "non automatic" mode output
5 - 6: programmable output
7: genset start / stop relay
8: RJ 45 ATyS D10/D20 remote interface connection
9: RS485

A: bridging bar (accessory)
B: auxiliary contacts (accessory) - 1 AC per position I, 0, II

This document is not a contract. SOCOMEC reserves the right to modify features without prior notice in view of continued improvement. 2008 - 2009

ATyS: from 125 to 3200 A

Description

ATyS products are mechanically interlocked, back to back mounted, load break switches. Their compact design guarantees position stability and high dynamic withstand.

Manual operation

atys_097_b_1_cat

AUT / MAN command

An AUT / MAN selector inhibits automatic operation and allows handle use when positioned in manual mode. This selector is key type on ATyS 3e, 6e and 6m.

atys_013_a_1_cat

Backup manual operation

The product can still be switched without any power source using the manual operation. The handle (supplied with the product) allows direct operation of the changeover shaft. The switch cannot be manually operated in automatic mode (AUT) or padlocked.

atys_008_a_1_cat

Padlocking

Up to three padlocks can be used to lock the device.

When padlocked:

- manual operation is not possible,
- electrical controls are disabled.

Padlocking in the 3 positions I, 0 and II, available in option.

Main accessories

atys_565_c_2_cat

Remote control interface

Enables operation, configuration and display of all the functions remotely. It can be connected to an ATyS 6e or 6m via an RJ45 type link. When connected, all features available on the front of the product are inhibited. Maximum connection distance: 3m. 2 modeles: ATyS D10 (visualisation) and ATyS D20 (visualisation and control).

atys_011_a_1_cat

Voltage sensing and power supply kit

Allows voltage sensing and power supply connections through a controlled routing of the conductors, in order to avoid the use of specific protection devices (fuse / mcb).

Power supply

- ATyS 3s: one power input 230 VAC (176-288 VAC), 50/60 Hz (45-65 Hz).
- ATyS 3e, 6e, 6m: two power inputs VAC (176-288 VAC), 50/60 Hz (45-65 Hz), one defined as power source 1 and the other as backup power source 2. Electrical operation of the product is possible as soon as one of the power supplies is available.

Simplified diagram

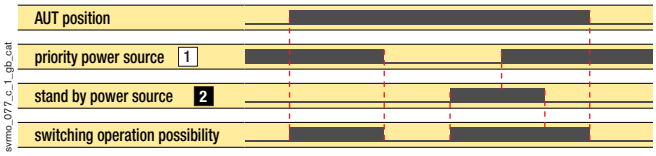

svmo_077_c_1_gb_cat

Control logic

General

- The switching operation can be driven by an external dry contact. “Pulsed contact logic” (impulse) or “maintained contact logic” (contactor), are both recognised on the control inputs.
- The type of logic must be selected during configuration (programming).
- Priorities: the first order received has priority as long as it is present. A zero command has always priority, excepted in case of controls inhibition.
- ATyS 3e integrates number of operation counter and allows optional communication or inputs/outputs module connection.

Impulse logic

- The switching command is a pulsed dry contact lasting at least 100 ms.
- When the order disappears, the product remains in position.The impulse can be of infinite duration without causing any disturbance.

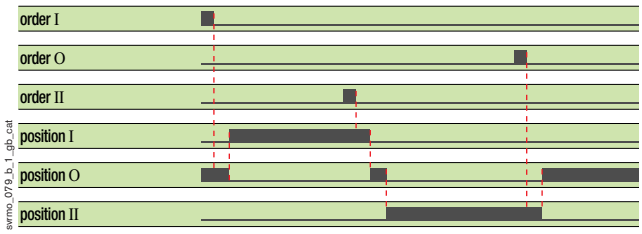

svmo_079_b_1_gb_cat

Contactor logic

- The transfer command is a maintained dry contact.
- If command I or II disappears, the device returns to zero position, if power supply is available.
- A 0 command drives the device into zero position, irrespective of the status of the I and II commands.

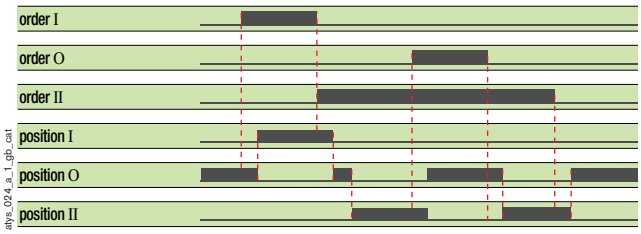

atys_024_a_1_gb_cat

This document is not a contract. SOCOMEC reserves the right to modify features without prior notice in view of continued improvement. 2008 - 2009

The ATyS range

Wiring diagram

ATyS 3s

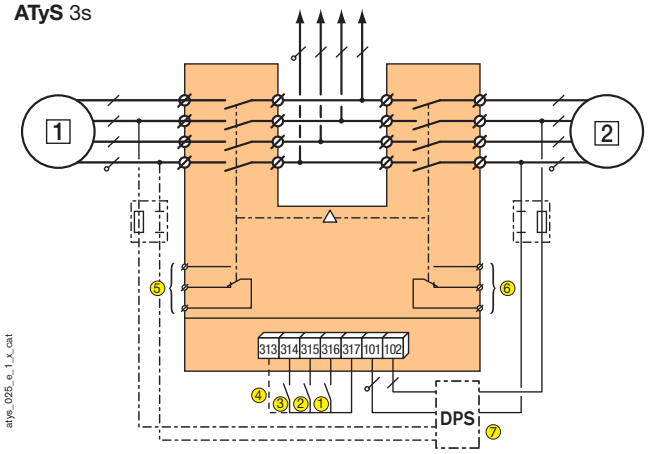

power source 1
power source 2
1: control position 0
2: control position I
3: control position II
4: configuration of the control logic
5: NO/NC position and pre-breaking contact for position I
6: NO/NC position and pre-breaking contact for position II
7: Double Power Supply (accessory)

ATyS 3e

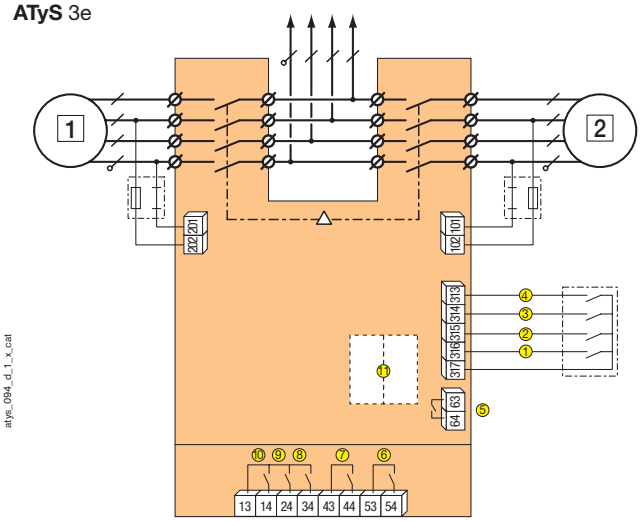

power source 1
power source 2
1 : control position 0
2 : control position I
3 : control position II
4 : inhibition of the control position
5 : fault relays
6 : auxiliary contact, closed when the switch is padlocked
7 : auxiliary contact, closed when the switch is in "AUT" mode
8 : auxiliary contact, closed when the switch is in position 0
9 : auxiliary contact, closed when the switch is in position II
10 : auxiliary contact, closed when the switch is in position I
11 : slots for optional modules

ATyS 6: Automatic Transfer Switches

General features

Single or three phases control on networks I and II

- Independent Under/ Over voltage and Under / Over frequency thresholds: +/- 20% of nominal value.
- Adjustable hysteresis thresholds.
- Phase rotation control.

Metering

- 3U on network 1 and 2.
- Frequency on network 1 and 2.
- Normal/Emergency timers.
- 3I, In, P, Q, S, PF (3 phases) on ATyS 6m.

Operation

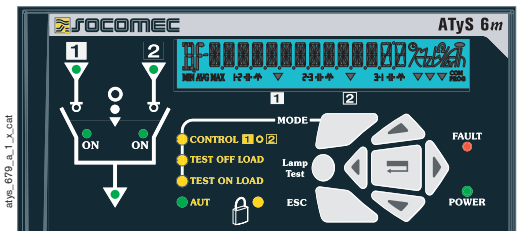

Display + keypad

- Setup and Thresholds configuration.
- Timers configuration MFT (0-60 s), DTT (0-60 s), 0MF (0-20 s), MRT (0-60 min.), 0MR (0-20 s), CDT (0- 10 min.).
- Voltage, Frequency, Timers monitoring.
- Test and positions control operations.

Leds

Power on; Fault; Sources availability; Changeover position; AUT mode; Test and control modes of operation.

1 configurable generator set bi-stable start/stop relay (30 VDC, 5 A, AC1).

1 NO fault relay activated in case of changeover position ordered and not reached (30 VDC, 5 A, AC1).

Control modes

- *Test on-load (load transfer):* allows loss of main's network simulation. The complete automatic cycle is then followed. Can be activated from the keypad of the device or remotely from an external dry contact.
- *Test off-load (without load transfer):* allows a generator set start and stop operation. Can be activated from the keypad of the device.
- *Control I, 0, II:* allows the product to be driven into one of the positions; the automatic cycle is then no longer active. Can be activated from the keypad of the device's front or using and external dry contact.
- *Semi automatic:* when this mode is active, any transfer back to the main network must be acknowledged on the keypad of the product or via an optional input contact.
- One input to control backup source changeover (when DTT timer = max value). Example: changeover operation on multiple generator sources after their synchronisation.

This document is not a contract. SOCOMEC reserves the right to modify features without prior notice in view of continued improvement. 2008 - 2009

Simplified wiring diagram

ATyS 6e / **ATyS** 6m

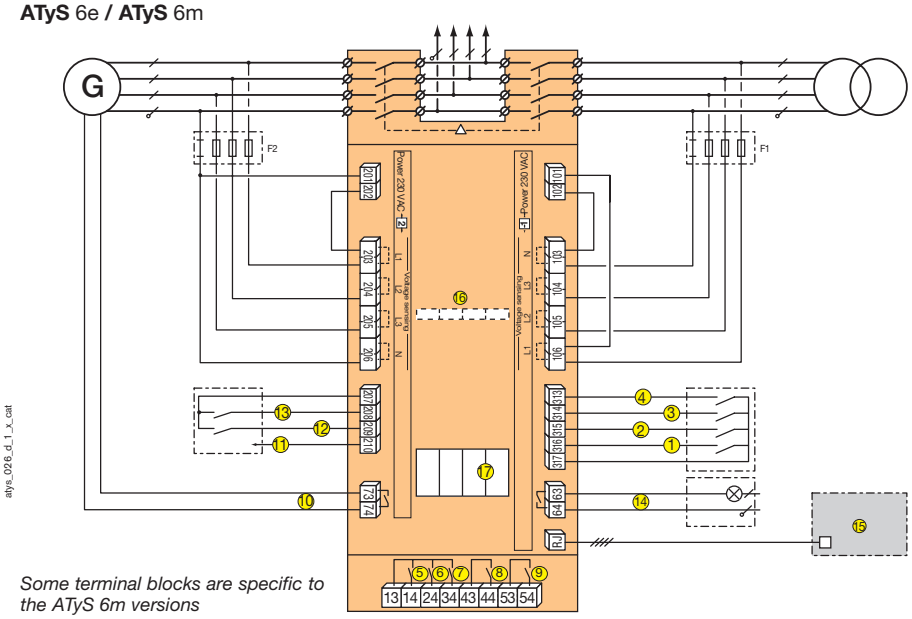

Some terminal blocks are specific to the ATyS 6m versions

1: control position 0
2: control position I
3: control position II
4: remote command
5: auxiliary contact, closed when the switch is in position I
6: auxiliary contact, closed when the switch is in position II
7: auxiliary contact, closed when the switch is in position 0
8: auxiliary contact, closed when the switch is in "AUT" mode
9: auxiliary contact, closed when the switch is padlocked
10: gen-set start and stop command
11: auxiliary power supply (for optional modules control)
12: remote "test on-load "input
13: DTT inhibit input. Transfer initiated as soon as the input is closed when DTT = max. value.
14: fault output
15: remote control interface
16: current transformers (ATyS 6m only)
17: slots for optional modules

ATyS enclosed range

Enclosed ATS solution

Enclosed dual by-pass solution

Product range

- From 63 to 1600 A.
- 230/400 VAC +/- 20%.
- 3 or 4 wires applications.

Range

The ATyS 3s, 6e and 6m enclosed range offer the following features:

- Non-Automatic Transfer Switch (ATyS 3s),
- Automatic Transfer Switch - ATS (ATyS 6e),
- single or dual BY-PASS automatic transfer switch (ATyS 6m).

Features

- Compact design.
- Mechanically interlocked switching.

Cable entry

- Top or bottom cable entry as standard from 63 to 250 A.
- Bottom cable entry as standard from 400 to 1600 A.
- Specific cable entry requirements available upon request.
- Neutral position located on the right as standard.
- Alternative options available upon request.

Main accessories

- Double (Self) power supply for ATyS 3 only.
- 2nd position auxiliary contact.
- Solid neutral.
- 400 / 230 VAC transformers (on each network) for 3 phases 400 VAC applications.
- Panel mounted ATyS D10 or D20 remote interfaces and indication meter.

This document is not a contract. SOCOMEC reserves the right to modify features without prior notice in view of continued improvement. 2008 - 2009

ATyS
63 to 3200 A

Functions
References
Accessories
Enclosed ATyS
Characteristics
Dimensions

ATyS M 3s

atysm_013_a_1_cat

ATyS M 6e

atysm_007_a_1_cat

Functions

ATyS products are 3 and 4-pole switches **remotely controlled by volt free contacts** (ATyS 3) or **automatic transfer switches** (ATyS 6).

They are a combination of two load-break switches mounted back to back electrically and mechanically interlocked.

They provide manual switching or remote controlled source inversion or changeover under load, of two low voltage power circuits.

Conformity to standards

- IEC 60947-3
- EN 60947-3
- NBN EN 60947-3
- BS EN 60947-3
- GB 14048
- IEC 60947-6-1
- EN 60947-6-1
- NBN EN 60947-6-1
- BS EN 60947-6-1
- VDE 0660-107

General characteristics

- Isolation with positive break indication.
- On load switching.
- Manual emergency operation.
- 3 stable positions (I, 0, II) or overlapping contacts on request (I, I+II, II), for ATyS only.
- Padlocking in 0 or in all three positions (I, 0, II).
- AUTO / MANU selector.

ATyS 3s

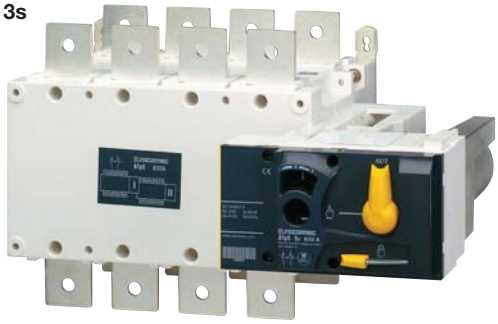

atys_003_a_1_cat

ATyS 6m

atys_102_a_1_cat

This document is not a contract. SOCOMEC reserves the right to modify features without prior notice in view of continued improvement. 2008 - 2009

Illustrations

ATyS M from 63 to 160 A

atysm_032_a_1_x_cat

Overview (for further details, please see the installation instructions supplied with each device).

1. ATyS D10 or D20 remote interfaces (ATyS **M 6e** only)
2. 1 or 2 auxiliary contacts
3. Terminal shrouds
4. Voltage sensing and power supply tap
5. Bridging bars

ATyS from 125 to 3200 A

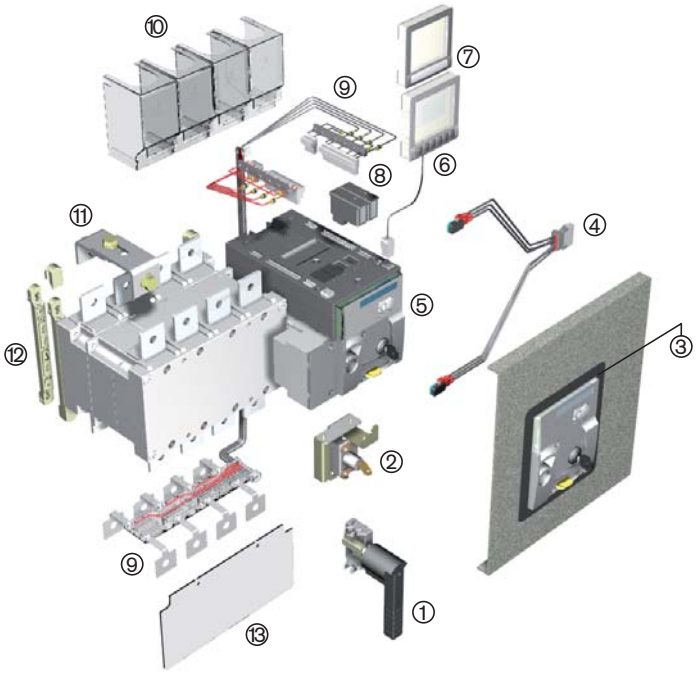

atys_615_a_1_x_cat

1. Backup handle and support (included with device)
2. Handle key interlocking accessories
3. Door protective surround
4. Additional auxiliary contacts
5. Standard device
6. Connecting cable for ATyS D10 or D20 remote interfaces (ATyS 6)
7. ATyS D10 or D20 interfaces (ATyS 6)
8. Plug-in optional modules (not for ATyS 3s)
9. Voltage sensing and power supply kit (ATyS 6)
10. Terminal shrouds
11. Bridging bars
12. Mounting spacers
13. Terminal screens

This document is not a contract. SOCOMEC reserves the right to modify features without prior notice in view of continued improvement. 2008 - 2009

ATyS
63 to 3200 A

Functions
References
Accessories
Enclosed ATyS
Characteristics
Dimensions

References

ATyS M 3

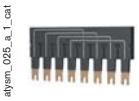

Rating (A)	No. of poles	ATyS M 3s (1)	Bridging bars	Voltage sensing and power supply tap	Terminal shrouds (2)	Auxiliary contacts (3)	DPS - Double power supply
63	4 P	1323 **4006**	1309 **4006**	pair 1399 **4006**	pair 2294 **4016**	1st AC standard 2nd AC 1309 **0001**	1599 **4001**
80	4 P	1323 **4008**					
100	4 P	1323 **4010**					
125	4 P	1323 **4012**					
160	4 P	1323 **4016**	1309 **4016**				

(1) Power-supply voltage 230 VAC.
(2) 2 pieces: top and bottom.
(3) 1 contact block for I, 0 and II positions.

ATyS M 6

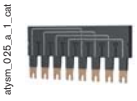

Rating (A)	No. of poles	Network (VAC)	ATyS M 6s	ATyS M 6e	Bridging bars	Voltage sensing and power supply tap	Terminal shrouds (1)	Auxiliary contacts (2)	Remote interface (3)	Sealable cover (4)
63	4 P	127 / 230	1353 **4006**	1363 **4006**	1309 **4006**	pair 1399 **4006**	pair 2294 **4016**	1309 **0001**	ATyS D10 1599 **2010** ATyS D20 1599 **2020**	1359 **0000**
	4 P	**230 / 400**	1354 **4006**	1364 **4006**						
80	4 P	127 / 230	1353 **4008**	1363 **4008**						
	4 P	**230 / 400**	1354 **4008**	1364 **4008**						
100	4 P	127 / 230	1353 **4010**	1363 **4010**						
	4 P	**230 / 400**	1354 **4010**	1364 **4010**						
125	4 P	127 / 230	1353 **4012**	1363 **4012**						
	4 P	**230 / 400**	1354 **4012**	1364 **4012**						
160	4 P	127 / 230	1353 **4016**	1363 **4016**	1309 **4016**					
	4 P	**230 / 400**	1354 **4016**	1364 **4016**						

(1) To shroud front switch top and bottom 2 references required.
(2) 1 contact block for I, 0 and II positions.
*(3) For ATyS **M 6e** only.*
*(4) For ATyS **M 6s** only.*

This document is not a contract. SOCOMEC reserves the right to modify features without prior notice in view of continued improvement. 2008 - 2009

References

ATyS 3

atys_003_a_3_cat

acces_205_a_1_cat

acces_206_a_1_cat

acces_207_a_1_cat

Rating (A)	No. of poles	ATyS 3s	ATyS 3e	Bridging bars	Terminal shrouds (1)(2)	Terminal screens (3)
125	3 P	1523 **3012**	1533 **3012**	1 P 4109 **0019**	3 P 2694 **3014**	3 P 1509 **3012**
	4 P	1523 **4012**(4)	1533 **4012**		4 P 2694 **4014**	4 P 1509 **4012**
160	3 P	1523 **3016**	1533 **3016**			
	4 P	1523 **4016**(4)	1533 **4016**			
250	3 P	1523 **3025**	1533 **3025**	1 P 4109 **0025**	3 P 2694 **3021**	3 P 1509 **3025**
	4 P	1523 **4025**(4)	1533 **4025**		4 P 2694 **4021**	4 P 1509 **4025**
400	3 P	1523 **3040**	1533 **3040**	1 P 4109 **0039**		
	4 P	1523 **4040**(4)	1533 **4040**			
630	3 P	1523 **3063**	1533 **3063**	1 P 4109 **0063**	2694 **3051**	1509 **3063**
	4 P	1523 **4063**(4)	1533 **4063**		2694 **4051**	1509 **4063**
800	3 P	1523 **3080**	1533 **3080**	1 P 4109 **0080**	-	3 P 1509 **3080**
	4 P	1523 **4080**(4)	1533 **4080**			4 P 1509 **4080**
1000	3 P	1523 **3100**	1533 **3100**			
	4 P	1523 **4100**(4)	1533 **4100**			
1250	3 P	1523 **3120**	1533 **3120**	1 P 4109 **0120**		
	4 P	1523 **4120**(4)	1533 **4120**			
1600	3 P	1523 **3160**	1533 **3160**	1 P 4109 **0160**		3 P 1509 **3160**
	4 P	1523 **4160**(4)	1533 **4160**			4 P 1509 **4160**
1800	3 P	1523 **3180**	-			
	4 P	1523 **4180**	-			
2000	3 P	-	1533 **3200**	See page A.126 "Copper bars connection kits"		3 P 1509 **3200**
	4 P	-	1533 **4200**			4 P 1509 **4200**
2500	3 P	-	1533 **3250**			
	4 P	-	1533 **4250**			
3200	3 P	-	1533 **3320**			
	4 P	-	1533 **4320**			

+ OTHER ACCESSORIES

	Rating (A)	Plug-in optional modules	Auxiliary contacts (5)	Control voltage transformer 400/230 VAC	DC power supply	Padlocking (5)	Handle key interlocking accessories (5)	Door protective surround	Mounting spacers	DPS - Double power supply
ATyS 3s	125 ... 160	-	1599 **1002**	1599 **4063**	12 VDC 1599 **5012**	1599 **0003**	1509 **1006**	1529 **0012**	1509 **0001**	1599 **4001**
	250 ... 400		1599 **1012**							
	630		1599 **1022**							
	800 ... 1800		1599 **1032**	1599 **4120**	24 VDC 1599 **5112**	1599 **0004**	1509 **1004**	1529 **0080**	-	
ATyS 3e	125 ... 160	RS485 1599 **2000**	1599 **0002**	1599 **4063**	48 VDC 1599 **5212**	1599 **0003**	1509 **1006**	1539 **0012**	1509 **0001**	-
	250 ... 400		1599 **0012**							
	630	2 inputs / 2 outputs 1599 **2001**	1599 **0022**							
	800 ... 1600		1599 **0032**	1599 **4120**		1599 **0004**	1509 **1004**	1539 **0080**	-	
	2000 ... 3200		(6)	1599 **4200**	-					

(1) To shroud front switch top and bottom 2 references required. (2) To fully shroud front and rear / top and bottom 4 references required.
(3) 1 set: top and bottom. (4) Available enclosed (see page A.134 "Enclosed ATyS 3s"). (5) Factory fitted. (6) The first contact is on the electronic part (the second and the third contacts are as standard).

This document is not a contract. SOCOMEC reserves the right to modify features without prior notice in view of continued improvement. 2008 - 2009

ATyS
63 to 3200 A

Functions
References
Accessories
Enclosed ATyS
Characteristics
Dimensions

References

ATyS 6

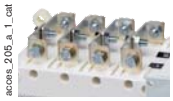
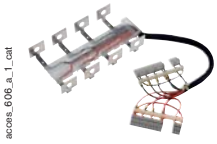

Rating (A)	No. of poles	ATyS 6e	ATyS 6m	Bridging bars	Voltage sensing kit		Terminal shrouds (1)(2)	Terminal screens (3)
125	3 P	1563 **3012**	1573 **3012**	1 P 4109 **0019**	3 P 1559 **3012**		3 P 2694 **3014**	3 P 1509 **3012**
	4 P	1563 **4012**(4)	1573 **4012**		4 P 1559 **4012**(5)	4 P 1559 **4013**(6)	4 P 2694 **4014**	4 P 1509 **4012**
160	3 P	1563 **3016**	1573 **3016**					
	4 P	1563 **4016**(4)	1573 **4016**					
250	3 P	1563 **3025**	1573 **3025**	1 P 4109 **0025**	1559 **3025**		3 P 2694 **3021**	3 P 1509 **3025**
	4 P	1563 **4025**(4)	1573 **4025**		1559 **4025**(5)	1559 **4026**(6)	4 P 2694 **4021**	4 P 1509 **4025**
400	3 P	1563 **3040**	1573 **3040**	1 P 4109 **0039**	1559 **3040**			
	4 P	1563 **4040**(4)	1573 **4040**		1559 **4040**(5)	1559 **4041**(6)		
630	3 P	1563 **3063**	1573 **3063**	1 P 4109 **0063**	1559 **3063**		2694 **3051**	1509 **3063**
	4 P	1563 **4063**(4)	1573 **4063**		1559 **4063**(5)	1559 **4064**(6)	2694 **4051**	1509 **4063**
800	3 P	1563 **3080**	1573 **3080**	1 P 4109 **0080**	3 P 1559 **3080**		-	3 P 1509 **3080**
	4 P	1563 **4080**(4)	1573 **4080**		4 P 1559 **4080**(5)	4 P 1559 **4081**(6)		4 P 1509 **4080**
1000	3 P	1563 **3100**	1573 **3100**					
	4 P	1563 **4100**(4)	1573 **4100**					
1250	3 P	1563 **3120**	1573 **3120**	1 P 4109 **0120**	1559 **3120**			
	4 P	1563 **4120**(4)	1573 **4120**		1559 **4120**(5)	1559 **4121**(6)		
1600	3 P	1563 **3160**	1573 **3160**	1 P 4109 **0160**	1559 **3160**			1509 **3160**
	4 P	1563 **4160**(4)	1573 **4160**		1559 **4160**(5)	1559 **4161**(6)		1509 **4160**
2000	3 P	1563 **3200**	1573 **3200**	See page A.18 "Copper bars connection kits"	3 P 1559 **3200**			3 P 1509 **3200**
	4 P	1563 **4200**	1573 **4200**					4 P 1509 **4200**
2500	3 P	1563 **3250**	1573 **3250**					
	4 P	1563 **4250**	1573 **4250**		4 P 1559 **4200**(5)	4 P 1559 **4201**(6)		
3200	3 P	1563 **3320**	1573 **3320**					
	4 P	1563 **4320**	1573 **4320**					

+ OTHER ACCESSORIES

Rating (A)	Plug-in optional modules	Remote control interface	RJ45 connecting cable	Auxiliary contacts (7)	Control voltage transformer 400/230 VAC	DC power supply	Padlocking (7)	Handle key interlocking accessories (7)	Door protective surround	Mounting spacers
125 ... 160	RS485 1599 **2000**	ATyS D10 1599 **2010**	1599 **2009**	1599 **0002**	1599 **4063**	12 VDC 1599 **5012**	1599 **0003**	1509 **1006**	1539 **0012**	1509 **0001**
250 ... 400				1599 **0012**		24 VDC 1599 **5112**				
630	2 inputs / 2 outputs 1599 **2001**	ATyS D20 1599 **2020**		1599 **0022**		48 VDC 1599 **5212**				
800 ... 1600				1599 **0032**	1599 **4120**		1599 **0004**	1509 **1004**	1539 **0080**	-
2000 ... 3200				(8)	1599 **4200**	-				

(1) To shroud front switch top and bottom 2 references required. (2) To fully shroud front and rear / top and bottom 4 references required.
(3) 1 set: top and bottom. (4) Available enclosed (see page A.135 "Enclosed ATyS 6e"). (5) Neutral on the right. (6) Neutral on the left. (7) Factory fitted.
(8) The first contact is on the electronic part (the second and the third contacts are as standard).

This document is not a contract. SOCOMEC reserves the right to modify features without prior notice in view of continued improvement. 2008 - 2009

ATyS M - Accessories

Bridging bars

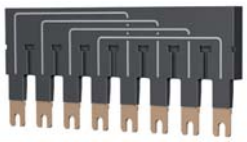

atysm_025_a_1_cat

Use
To provide common point on either incoming or outgoing terminals.

References

Rating (A)	No. of poles	References
63 … 125	4 P	1309 **4006**
160	4 P	1309 **4016**

Voltage sensing and power supply tap

atysm_026_a_1_cat

Use
Allows up to 2 x <=1.5 mm² voltage sensing or power cables connection. To be mounted in any terminal cage when bridging bar not used.

Reference

Rating (A)	No. of parts	Reference
63 … 160	Pair	1399 **4006** (1)

(1) 2 parts per reference.

Terminal shrouds

atysm_027_a_1_cat

Use
Protection against direct contact with the connection terminals or parts.
Advantages
Perforations enabling remote thermographic inspection without dismantling.

Reference

Rating (A)	No. of parts	Position	Reference
63 … 160	Pair	Top and bottom	2294 **4016** (1)

(1) To shroud front changeover top and bottom 2 references required.

Auxiliary contacts

atysm_028_a_1_cat

Use
Up to 2 auxiliary contacts accessory per product.
Each accessory integrates 3 NOC auxiliary contacts, one per position I, 0, II.
Characteristics: 250 VAC / 5 A maximum.

Reference

For ATyS M 3s

Rating (A)	Reference
63 … 160	standard
1st AC - 2nd AC	1309 **0001**

For ATyS M 6s and 6e

Rating (A)	Reference
63 … 160	1309 **0001**

Sealable cover

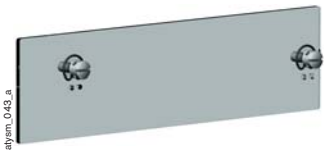

atysm_043_a

Use
Controls settings cover to prevent ATyS M 6s parameters access due to a sealable facility.

Reference

Rating (A)	Reference
63 … 160	1359 **0000**

This document is not a contract. SOCOMEC reserves the right to modify features without prior notice in view of continued improvement. 2008 - 2009

ATyS - Accessories

Bridging bars

acces_205_a_1_cat

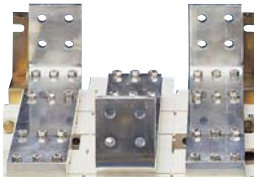

acces_041_a_1_cat

Use
To provide common point on either incoming or outgoing terminals.

References

Rating (A)	No. of poles	Section (mm)	References
125 … 160	1 P	20 x 2.5	4109 **0019**
250	1 P	25 x 2.5	4109 **0025**
400	1 P	32 x 5	4109 **0039**
630	1 P	50 x 5	4109 **0063**
800 … 1000	1 P	50 x 6	4109 **0080**
1250	1 P	60 x 8	4109 **0120**
1600 … 1800	1 P	90 x 10	4109 **0160**

Copper bars connection kits

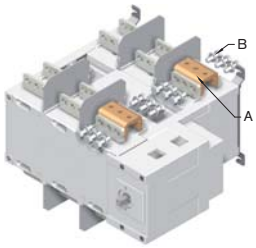

acces_226_c_1_x_cat

Fig.1

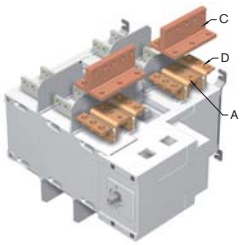

acces_228_b_1_x_cat

Fig.2

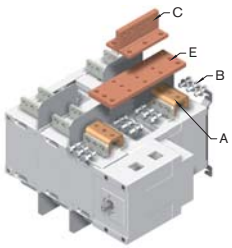

acces_230_b_1_x_cat

Fig.3

Use
To allow:
- connection between the two power terminals from a same pole for 2000 to 3200 A ratings (Fig. 1 and Fig 2),
- top or bottom bridging connection (Fig. 3).

For 3200 A rating, the connection piece (part A) are delivered bridged from factory.
Bolt sets must be ordered separately.

Dimensions
See page A.145, for connection kit assembly.

Technical notice for these specific accessories is downloadable from www.socomec.com

References

Top or bottom flat connection - Fig. 1

Rating (A)	Part	Qty to order per pole (1)	References
2000 … 2500	Connection piece - part A	2	2619 **1200**
2000 … 2500	Bolt set - part B	2	2699 **1200**
3200	Connection piece - part A	/	standard
3200	Bolt set - part B	2	2699 **1200**

Top or bottom edgewise connection - Fig. 2

Rating (A)	Part	Qty to order per pole (1)	References
2000 … 2500	Connection piece - part A	2	2619 **1200**
2000 … 2500	T piece - part C	2	2629 **1200** (2)
2000 … 2500	Right angle - part D	2	2639 **1200** (2)
3200	Connection piece - part A	/	standard
3200	T piece - part C	2	2629 **1200** (2)
3200	Right angle - part D	2	2639 **1200** (2)

Top or bottom bridging connection - Fig. 3

Rating (A)	Part	Qty to order per pole (1)	References
2000 … 2500	Connection piece - part A	2	2619 **1200**
2000 … 2500	Bolt set - part B	2	2699 **1200**
2000 … 2500	Bar - part E	1	4109 **0250** (2)
2000 … 2500	T piece - part C	1	2629 **1200** (2)
3200	Connection piece - part A	/	standard
3200	Bolt set - part B	2	2699 **1200**
3200	Bar - part E	1	4109 **0320** (2)
3200	T piece - part C	1	2629 **1200** (2)

(1) Example for 3-pole device equipped top only: order 3 times the quantities.
(2) Bolt set is provided with the accessories.

This document is not a contract. SOCOMEC reserves the right to modify features without prior notice in view of continued improvement. 2008 - 2009

ATyS - Accessories

Voltage sensing and power supply kit

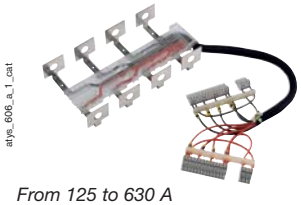

From 125 to 630 A

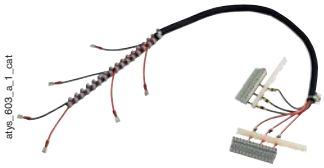

From 800 to 3200 A

Use

For ATyS 6 power supply and voltage measurement (4 wires, three phases).

Routing of the conductors is controlled, which means that no specific protective device is necessary for these connections.

The kit can be fitted on the top or the bottom of the switch.

NB: the 3-pole version does not integrate the power supply.

References

For ATyS 6 - 3 pole

Rating (A)	References
125 … 160	1559 **3012**
250	1559 **3025**
400	1559 **3040**
630	1559 **3063**
800 … 1000	1559 **3080**
1250	1559 **3120**
1600	1559 **3160**
2000 … 3200	1559 **3200**

For ATyS 6 - 4 pole

	Neutral on the right	Neutral on the left
Rating (A)	References	References
125 … 160	1559 **4012**	1559 **4013**
250	1559 **4025**	1559 **4026**
400	1559 **4040**	1559 **4041**
630	1559 **4063**	1559 **4064**
800 … 1000	1559 **4080**	1559 **4081**
1250	1559 **4120**	1559 **4121**
1600	1559 **4160**	1559 **4161**
2000 … 3200	1559 **4200**	1559 **4201**

Plug-in optional modules

Use

No. 1: COM module control and state feedback of the changeover switch via a 2 or 3-wire RS485 link with JBUS/MODBUS protocol® and transmission speed up to 38,400 baud.

No. 2: module with 2 inputs/ 2 outputs

- For ATyS 3e:
  2 inputs: changeover control + backup network availability ;
  2 outputs: a load shedder relay + fault relay.
- For ATyS 6e and 6m: 2 inputs/ 2 outputs, programmable.

References

Description of accessories	References
COM RS485 (No. 1)	1599 **2000**
2 inputs/2 outputs (No. 2)	1599 **2001**

This document is not a contract. SOCOMEC reserves the right to modify features without prior notice in view of continued improvement. 2008 - 2009

ATyS
63 to 3200 A

Functions
References
Accessories
Enclosed ATyS
Characteristics
Dimensions

ATyS - Accessories

Terminal shrouds

acces_206_a_1_cat

Use

Protection against direct contact with the connection terminals or parts.

Advantages

Perforations enabling remote thermographic inspection without dismantling.

References

Rating (A)	No. of poles	Position	References
125 … 160	3 P	top / bottom / front (I) / rear (II)	2694 **3014**(1)(2)
125 … 160	4 P	top / bottom / front (I) / rear (II)	2694 **4014**(1)(2)
250 … 400	3 P	top / bottom / front (I) / rear (II)	2694 **3021**(1)(2)
250 … 400	4 P	top / bottom / front (I) / rear (II)	2694 **4021**(1)(2)
630	3 P	top / bottom / front (I) / rear (II)	2694 **3051**(1)(2)
630	4 P	top / bottom / front (I) / rear (II)	2694 **4051**(1)(2)

(1) To shroud front switch top and bottom 2 references required.
(2) To fully shroud front and rear / top and bottom 4 references required.

Terminal screens

acces_207_a_1_cat

Use

Top or bottom protection against direct contacts with the connection terminals or parts.

References

Rating (A)	No. of poles	Position	References
125 … 160	3 P	top or bottom	1509 **3012**
125 … 160	4 P	top or bottom	1509 **4012**
250 … 400	3 P	top or bottom	1509 **3025**
250 … 400	4 P	top or bottom	1509 **4025**
630	3 P	top or bottom	1509 **3063**
630	4 P	top or bottom	1509 **4063**
800 … 1250	3 P	top or bottom	1509 **3080**
800 … 1250	4 P	top or bottom	1509 **4080**
1600 … 1800	3 P	top or bottom	1509 **3160**
1600 … 1800	4 P	top or bottom	1509 **4160**
2000 … 3200	3 P	top or bottom	1509 **3200**
2000 … 3200	4 P	top or bottom	1509 **4200**

Inter phase barriers

acces_036_a_1_cat

Use

Safety isolating separation between the terminals, essential for use at 690 VAC or in a dusty atmosphere.

The terminal shrouds also provide phase separation for ATyS from 125 to 630 A.

References

Rating (A)	No. of poles	References
125 … 160	3 P	2998 **0033**
125 … 160	4 P	2998 **0034**
250 … 400	3 P	2998 **0023**
250 … 400	4 P	2998 **0024**
630	3 P	2998 **0013**
630	4 P	2998 **0014**
800 … 3200	3/4 P	standard

This document is not a contract. SOCOMEC reserves the right to modify features without prior notice in view of continued improvement. 2008 - 2009

ATyS - Accessories

Auxiliary contacts

acces_065_a_1_cat

Use

Pre-breaking and signalling of positions I and II:
1 extra NO / NC auxiliary contact in each position (factory fitted).

Low level AC: please consult us.

References

For ATyS 3s

Rating (A)	References
125 … 160	1599 **1002**
250 … 400	1599 **1012**
630	1599 **1022**
800 … 1800	1599 **1032**

For ATyS 3e, 6e and 6m

Rating (A)	References
125 … 160	1599 **0002**
250 … 400	1599 **0012**
630	1599 **0022**
800 … 1600	1599 **0032**
2000 … 3200	(1)

(1) The first contact is on the electronic part (the second and the third contacts are as standard).

Control voltage transformer

Use

Enables a 230 VAC device to be supplied with 400 VAC.

References

Rating (A)	References
125 … 630	1599 **4063**
800 … 1800	1599 **4120**
2000 … 3200	1599 **4200**

DC power supply

Use

Allows standard ATyS, to be DC power supplied.
To be positioned as close as possible from DC power supply source.
Not available for ratings from 2000 to 3200 A.

References

Rating (A)	Voltage	References
125 … 1800	12 VDC / 230 VAC	1599 **5012**
125 … 1800	24 VDC / 230 VAC	1599 **5112**
125 … 1800	48 VDC / 230 VAC	1599 **5212**

Padlocking in the 3 positions I-0-II

Atys_125_a_1_cat

Use

Allows locking of the operation in the 3 positions I, 0 and II.
Factory fitted.

References

Rating (A)	References
125 … 630	1599 **0003**
800 … 3200	1599 **0004**

This document is not a contract. SOCOMEC reserves the right to modify features without prior notice in view of continued improvement. 2008 - 2009

ATyS
63 to 3200 A

Functions
References
Accessories
Enclosed ATyS
Characteristics
Dimensions

ATyS - Accessories

Handle key interlocking accessories

Atys_101_a_1_cat

Use

Locking the electrical control and the backup control in position 0 using a RONIS EL11AP lock.

Factory fitted.

As standard, locking in position 0.

Optional padlocking in 3 positions: 0, I and II.

References

Rating (A)	References
125 … 630	1509 **1006**
800 … 3200	1509 **1004**

Mounting spacers

atys_009_a_1_cat

Use

Raises the device's terminals 10 mm away from the bottom of the enclosure or frame on which the device is mounted.

This may also be used to replace the original mounting spacers.

Reference

Rating (A)	Description of accessories	Reference
125 … 630	1 set of 2 spacers	1509 **0001**

Door protective surround

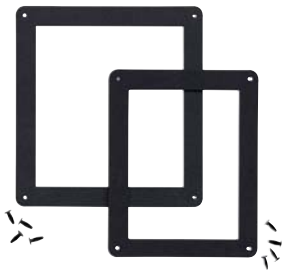
atys_595_a_1_cat

Use

Door finishing surround for protecting ATyS application.

References

For ATyS 3s

Rating (A)	References
125 … 630	1529 **0012**
800 … 1800	1529 **0080**

For ATyS 3e, 6e and 6m

Rating (A)	References
125 … 630	1539 **0012**
800 … 3200	1539 **0080**

This document is not a contract. SOCOMEC reserves the right to modify features without prior notice in view of continued improvement. 2008 - 2009

ATyS - Accessories

Remote interfaces for ATyS M 6e and ATyS 6e, 6m, C30

atys_564_c_1_cat

atys_565_c_1_cat

Use

Dedicated to applications where the ATyS is back panel mounted.

Interfaces are self powered from the ATyS.

Maximum connection distance: 3 m.

ATyS D10

To display source availability and changeover state on the cabinet front panel, IP21 alone.

ATyS D20

In addition to the ATyS D10 allows displays, operation and configuration on the cabinet front panel, IP21 alone.

Door mounting

2 holes Ø 22.5.

Master ATyS connection via RJ45 cable, not isolated.

Reference

Description	References
ATyS D10 interface	1599 **2010**
ATyS D20 interface	1599 **2020**

atys_597_a_1_cat

RJ45 link for ATyS connection

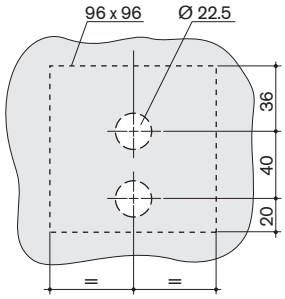

atys_161_a_1_x_cat

Drilled holes

This document is not a contract. SOCOMEC reserves the right to modify features without prior notice in view of continued improvement. 2008 - 2009

ATyS
63 to 3200 A

Functions
References
Accessories
Enclosed ATyS
Characteristics
Dimensions

ATyS - Accessories

Connecting cable for remote interfaces D10 / D20

atys_209_a_1_cat

Use

Connection between interface (type D10 or D20) and ATyS **M 6e** or ATyS 6e, 6m, C30.

Characteristics: RJ45 8 wires not insulated straight connection, 3 meters length.

Reference

*For ATyS **M 6e** and ATyS 6e, 6m, C30*

Type	Length	Reference
RJ45 cable	3 m	1599 **2009**

Double power supply - DPS

atys_612_a_2_cat

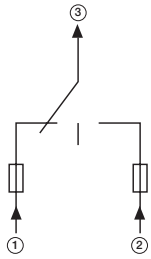

atys_616_a

1 and 2. Voltage inputs
3. Voltage output

Use

Allows for ATyS **M 3s** and ATyS 3s to be supplied by two 230 VAC 50/60 Hz networks.

Inputs

- The input is considered as “active” from 200 VAC.
- Max. voltage: 280 VAC.
- Internal protection: each input is fuse protected (6x32 SA 3.15 A).
- Connection on terminals: max. 6 mm².
- Modular device: 4 modules width.

Reference

*For ATyS **M 3s** and ATyS 3s*

Description	Reference
Double Power Supply (DPS)	1599 **4001**

Input 1	Input 2	Output
230 VAC	0 VAC	230 VAC (Input 1)
0 VAC	230 VAC	230 VAC (Input 2)
230 VAC	230 VAC	230 VAC (Input 1)
0 VAC	0 VAC	0 VAC

This document is not a contract. SOCOMEC reserves the right to modify features without prior notice in view of continued improvement. 2008 - 2009

Enclosed ATyS M

Steel enclosure

cotf_335_a_1_cat

Functions
- Modular design.
- Different optional accessories are available.

Conformity to standards
- IEC 60439-1

General characteristics
- From 63 to 160 A.
- 230/400 VAC network +/- 20 % (standard).
- 127/230 VAC network for ATyS **M 6e** (on request).
- 3 or 4 wires applications.
- Protection degree: IP41 (standard), IP55 (optional).
- Colour: RAL 7035.
- Cable gland plate: top or bottom.
- Material: steel thickness 1.5 mm.
- Coating: epoxy polyester powder.
- Wall mouting: 4 wall mouting brackets supplied-not mounted.
- Door: solid with hinges, 45 mm cut out dimension, with glass for IP55 version.
- Locking system: 3 mm double-bar key (key supplied).
- Miscellaneous: 2 earth connection points, neutral on the right.
- Weight (without busbar support): 32 kg (6 kg for busbar support).
- Connection terminals (without busbar support): 6 mm² minimum Cu section, 50 mm² maximum Cu section.

Options
- Auxiliary contact: integrate NOC per position (I, 0, II), 1 per enclosure.
- Voltage sensing and power supply top: allow up to 2 x 1.5 mm² cable connection.
- Busbar support for Cu connection up to 120 mm².
- Sealable cover.

ATyS M 3s - 230 VAC network

		Enclosure IP41	Enclosure IP55
Rating (A)	No. of poles	References	References
63	4 P	1823 **4006**	1823 **4007**
100	4 P	1823 **4010**	1823 **4011**
125	4 P	1823 **4012**	1823 **4013**
160	4 P	1823 **4016**	1823 **4017**

ATyS M 6e - 230/400 VAC network(1)

		Enclosure IP41	Enclosure IP55
Rating (A)	No. of poles	References	References
63	4 P	1854 **4006**	1854 **4007**
100	4 P	1854 **4010**	1854 **4011**
125	4 P	1854 **4012**	1854 **4013**
160	4 P	1854 **4016**	1854 **4017**

(1) 127/230 VAC network: on request.

Factory fitted options

Description	References
Auxiliary contact	1309 **0001**
2 voltage sensing and power supply	1399 **4006**
Solid neutral	1309 **9008**
Extension box	1309 **9007**(1)
Sealable cover	1359 **0000**(2)
Busbar support	1309 **0002**

*(1) For ATyS **M 3s** only.*
*(2) For ATyS **M 6e** only.*

Dimensions

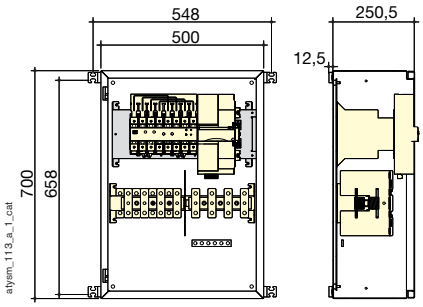

atysm_113_a_1_cat

This document is not a contract. SOCOMEC reserves the right to modify features without prior notice in view of continued improvement. 2008 - 2009

ATyS
63 to 3200 A

Enclosed ATyS 3s

Steel enclosure

coff_305_a_1_cat

Functions
- Non-Automatic Transfer Switch.
- Compact design.
- Mechanically interlocked switching.
- Connection ready for external logic control.

Conformity to standards
- IEC 60439-1

General characteristics
- Adapted to mechanical risk and dust hazard.
- Protection degree: IP54 (standard device).
- Colour: RAL 7035.
- Cable gland plate: top and bottom from 63 to 250 A,
  bottom from 400 to 1600 A.
- Material: steel thickness 2 mm.
- Coating: epoxy polyester powder.
- Wall mounting: 4 wall mounting brackets supplied - not mounted (rating ≤ 400 A), floor standing feet (rating ≥ 630 A).
- Door: solid with hinges.
- Locking system: 3 mm double-bar key (key supplied).
- Miscellaneous: 2 earth connection points, neutral on the right.
- Accessories: double power supply, 2nd auxiliary contact, solid neutral, 400/230 VAC transformers (on each network), 3 positions padlocking, ...

Available on request
- Enclosures and specific connections: neutral on the left, ...

Standard device - 230 VAC

Rating (A)	No. of poles	References
63	4 P	1723 **4006**
100	4 P	1723 **4010**
125	4 P	1723 **4012**
160	4 P	1723 **4016**
250	4 P	1723 **4025**
400	4 P	1723 **4040**
630	4 P	1723 **4063**
800	4 P	1723 **4080**
1000	4 P	1723 **4100**
1250	4 P	1723 **4120**
1600	4 P	1723 **4160**

Factory fitted accessories

Description	References
Double power supply	1599 **9001**
2nd auxiliary contact: from 63 to 630 A	1599 **9002**
2nd auxiliary contact: from 800 to 1600 A	1599 **9012**
400 / 230 VAC transformer	consult us
3 positions padlocking	1599 **9003**

Customer fitted accessories

Solid neutral	References
63 ... 160 A	1599 **1006**
250 A	1599 **1025**
400 A	1599 **1040**
630 A	1599 **1063**
800 A	1599 **1080**
1000 A	1599 **1100**
1250 A	1599 **1120**
1600 A	1599 **1160**

Dimensions

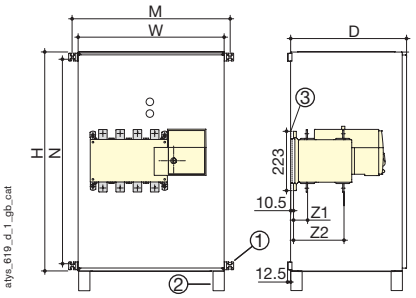

atys_619_d_1_gb_cat

Rating (A)	Connection section (mm²)	Max. connection section (mm²)	H	W	D	M	N	Z1	Z2	Weight (kg)
63 ... 100	-	50	650	400	300	448	608	-	-	-
125	-	50	650	400	300	448	608	38	134	25
160	70	95	650	400	300	448	608	38	134	25
250	120	150	1000	650	475	698	958	39.5	134.5	45
400	240	240	1000	650	475	698	958	39.5	134.5	50
630	2 x 185	2 x 240	1000	650	475	-	-	53	190	70
800	2 x 240	2 x 300	1200	800	660	-	-	66.5	253.5	135
1000	4 x 150	2x300 / 4x240	1200	800	660	-	-	66.5	253.5	140
1250	4 x 185	2x300 / 4x240	1600	1000	830	-	-	66.5	253.5	270
1600	4 x 240	6x185 / 4x300	1600	1000	830	-	-	67.5	253.5	375

(1) Wall mounting brackets delivered up to 400 A.
(2) Floor standing feet from 630 A (add 200 mm for feet, at H dimension).
(3) Mounting spacers.

This document is not a contract. SOCOMEC reserves the right to modify features without prior notice in view of continued improvement. 2008 - 2009

Enclosed ATyS 6e

Steel enclosure

cotf_306_a_1_cat

Functions
- Automatic Transfer Switch - ATS.
- Compact design.
- Mechanically interlocked switching.
- Connection ready for external logic control.

Conformity to standards
- IEC 60947-6-1
- IEC 60439-1

General characteristics
- Adapted to mechanical risk and dust hazard.
- Protection degree: IP54 (standard device).
- Colour: RAL 7035.
- Cable gland plate: top and bottom from 63 to 250 A, bottom from 400 to 1600 A.
- Material: steel thickness 2 mm.
- Coating: epoxy polyester powder.
- Wall mounting: 4 wall mounting brackets supplied - not mounted (rating ≤ 400 A), floor standing feet (rating > 630 A).
- Door: solid with hinges.
- Locking system: 3 mm double-bar key (key supplied).
- Miscellaneous: 2 earth connection points, neutral on the right.
- Accessories: 2nd auxiliary contact, solid neutral, 400/230 VAC transformers (on each network), 3 positions padlocking, ...

Available on request
- Enclosures and specific connections: neutral on the left, ...

Standard device - 230 VAC

Rating (A)	No. of poles	References
63	4 P	1763 **4006**
100	4 P	1763 **4010**
125	4 P	1763 **4012**
160	4 P	1763 **4016**
250	4 P	1763 **4025**
400	4 P	1763 **4040**
630	4 P	1763 **4063**
800	4 P	1763 **4080**
1000	4 P	1763 **4100**
1250	4 P	1763 **4120**
1600	4 P	1763 **4160**

Factory fitted accessories

Description	References
2nd auxiliary contact: from 63 to 630 A	1599 **9022**
2nd auxiliary contact: from 800 to 1600 A	1599 **9032**
400 / 230 VAC transformer	consult us
3 positions padlocking	1599 **9003**

Customer fitted accessories

Description	References
ATyS D10 (1)	1599 **2010**
ATyS D20 (1)	1599 **2020**
RJ45 connection cable	1599 **2009**
Communication RS485 MODBUS	1599 **2000**
2 inputs / 2 outputs	1599 **2001**
Solid neutral (see page A.134 "Enclosed ATyS 3s")	-

(1) "RJ45 connection" cable is required.

Dimensions

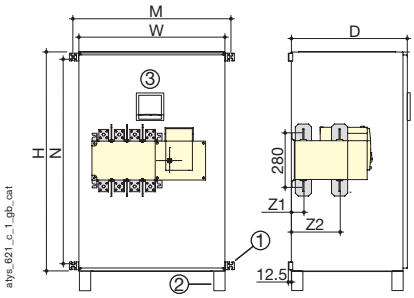

ATyS_621_c_1_gb_cat

Rating (A)	Connection section (mm²)	Max. connection section (mm²)	H	W	D	M	N	Z1	Z2	Weight (kg)
63 ... 100	-	50	650	400	300	448	608	-	-	-
125	-	50	650	400	300	448	608	38	134	25
160	70	95	650	400	300	448	608	38	134	25
250	120	150	1000	650	475	698	958	39.5	134.5	45
400	240	240	1000	650	475	698	958	39.5	134.5	50
630	2 x 185	2 x 240	1000	650	475	-	-	53	190	70
800	2 x 240	2 x 300	1200	800	660	-	-	66.5	253.5	135
1000	4 x 150	2x300 / 4x240	1200	800	660	-	-	66.5	253.5	140
1250	4 x 185	2x300 / 4x240	1600	1000	830	-	-	66.5	253.5	270
1600	4 x 240	6x185 / 4x300	1600	1000	830	-	-	67.5	253.5	375

(1) Wall mounting brackets delivered up to 400 A.
(2) Floor standing feet from 630 A (add 200 mm for feet, at H dimension).
(3) ATyS D10 or D20 interfaces.

This document is not a contract. SOCOMEC reserves the right to modify features without prior notice in view of continued improvement. 2008 - 2009

ATyS
63 to 3200 A

Enclosed ATyS 6 with isolation BY-PASS

Steel enclosure

ATyS_712_a_1_cat

Functions

- ATyS 6m Automatic Transfer Switch provides all functions required for break before make ATS applications.
- The SOCOMEC BY-PASS system allows complete ATS isolation. Top and bottom isolation is achieved using the SOCOMEC 12+4 pole BY-PASS switch up to 630 A.
- For the double line version during the ATS isolation, supply, selection remains possible thanks to a manual changeover.
- ATyS 6m associated to a ATyS D20 remote display allows configuration, operation and measurement from outside the panel (adjustable time/transfer delays and control level (U, F), generator start/stop control,...).
- Different optional accessories are available.

Conformity to standards

- IEC 60947-6-1
- IEC 60439-1
- IEC 60529

General characteristics

Product range

- From 63 to 1600 A, 4 pole, 3 or 4 wires applications.
- 400/230 VAC +/- 20%, 50/60 Hz; self supplied from incoming sources.

Main features

- ATS logic control sequence (dual source automatic changeover).
- 3 phases voltage and frequency detection & phase rotation control of both sources.
- Generator start / stop relay output.
- ATS I, 0, II electrical control by volt free dry contacts.
- ATS Emergency manual operation.
- ATS position 0.
- Isolation by-pass and manual changeover 0, I, II auxiliary contacts.
- ATS Auto / Manual key selector with auxiliary contact.

Enclosure

- IP 41 protection rating as standard.
- Hinged door, double bar locking system.
- Wall mounting brackets delivered up to 400 A.
- Floor standing feet from 630 to 1600 A rating.
- Terminals protection screen.
- Steel enclosure.
- RAL 7035.

Cable entry

- Bottom cable entry as standard.
- Specific cable entry requirements available upon request.
- Neutral position located on the right as standard.
- Alternative options available upon request.

Standard device - 230 VAC		Single line	Double line
Rating (A)	No. of poles	References	References
63	4 P	1773 **4007**	1774 **4007**
100	4 P	1773 **4011**	1774 **4011**
125	4 P	1773 **4013**	1774 **4013**
160	4 P	1773 **4016**	1774 **4016**
250	4 P	1773 **4025**	1774 **4025**
400	4 P	1773 **4040**	1774 **4040**
630	4 P	1773 **4063**	1774 **4063**
800	4 P	1773 **4080**	1774 **4080**
1000	4 P	1773 **4100**	1774 **4100**
1250	4 P	1773 **4120**	1774 **4120**
1600	4 P	1773 **4160**	1774 **4160**

Factory fitted accessories

Description	References
2nd auxiliary contact (1 per position)	1599 **9022**
400 / 230 VAC transformer (1 per network)	consult us
3 positions padlocking	1599 **9003**
Clock exerciser with dataloging	consult us
3 current transformers (CTs)	consult us

Customer fitted accessories

Description	References
Communication RS485 MODBUS	1599 **2000**
2 inputs / 2 outputs	1599 **2001**
Solid neutral	consult us

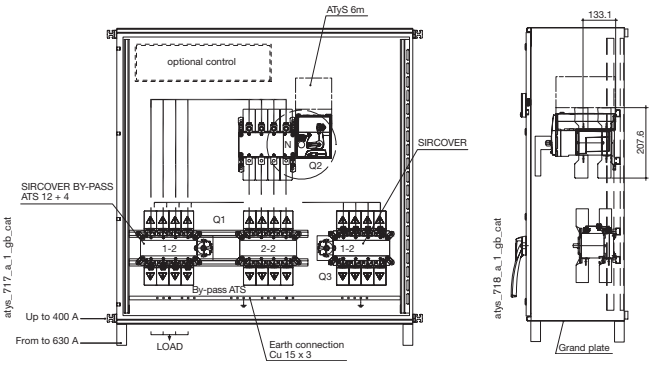

Example: ATyS 6m 400 A - double line version with isolation BY-PASS in enclosure.

This document is not a contract. SOCOMEC reserves the right to modify features without prior notice in view of continued improvement. 2008 - 2009

Enclosed ATyS 6 with isolation BY-PASS (continued)

Steel enclosure

Illustrations

Operation

- ATS position:
  - I_1, I_2, I_3: closed
  - II: opened
- BY-PASS position:
  - I_1, I_2, I_3: opened
  - II: closed

For the double line version, I_4 or II_2 closed depending on supply source required.

ATyS from 125 to 630 A - SINGLE LINE

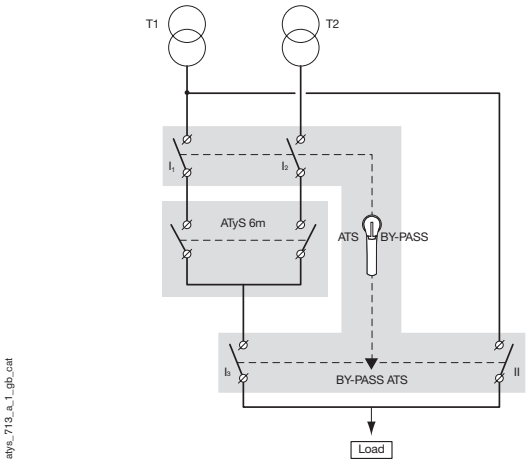

- 1 ATyS 6m
- 1 SIRCOVER 12 + 4 pole

ATyS from 125 to 630 A - DOUBLE LINE

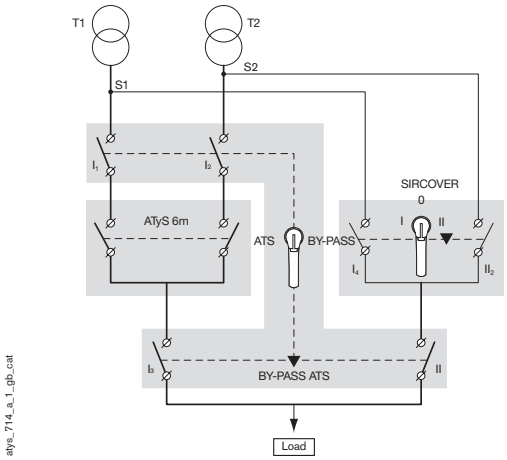

- 1 ATyS 6m
- 1 SIRCOVER 12 + 4 pole
- 1 SIRCOVER 4 pole

ATyS from 800 to 1600 A - SINGLE LINE

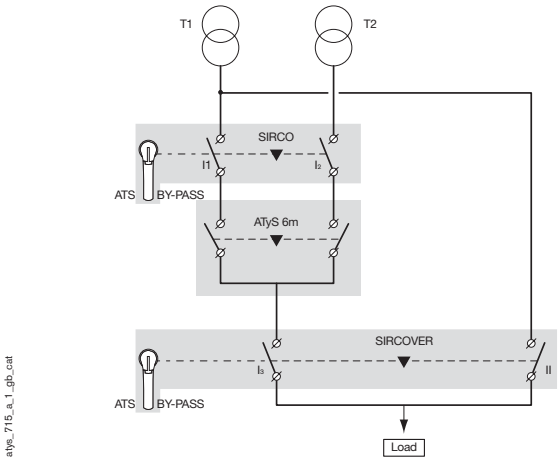

- 1 ATyS 6m
- 1 SIRCO 8 pole and
  1 SIRCOVER 4 pole

ATyS from 800 to 1600 A - DOUBLE LINE

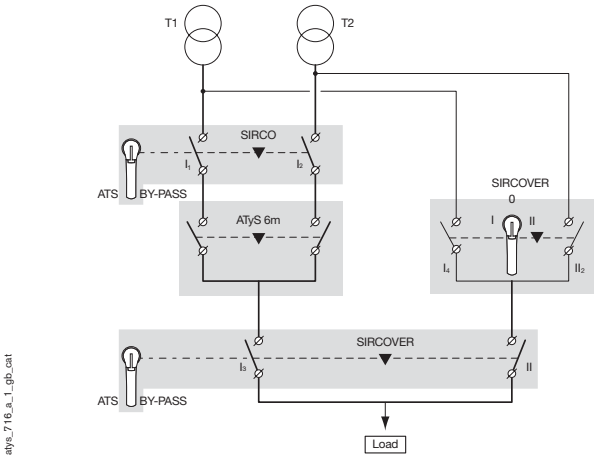

- 1 ATyS 6m
- 1 SIRCO 8 pole and
  1 SIRCOVER 4 pole
- 1 SIRCOVER 4 pole

This document is not a contract. SOCOMEC reserves the right to modify features
without prior notice in view of continued improvement. 2008 - 2009

Enclosed ATyS 6 with isolation BY-PASS (continued)

Steel enclosure

Dimensions

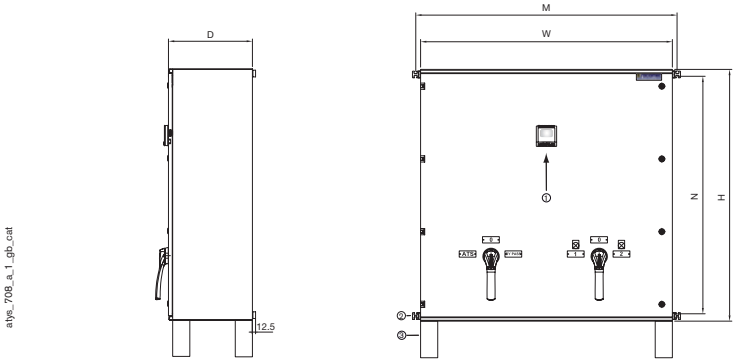

1. Remote interface ATyS D20
2. Up to 400 A
3. From 630 A

Single line version

Wall mounting - Bottom

Rating (A)	Connection section (mm²)	Max. connection section (mm²)	H	W	D	M	N
63	-	50	1000	800	400	848	958
100	-	50	1000	800	400	848	958
125	-	50	1000	800	400	848	958
160	70	95	1000	800	400	848	958
250	120	150	1200	800	400	848	1158
400	240	240	1200	800	400	848	1158

Floor standing - Bottom

Rating (A)	Connection section (mm²)	Max. connection section (mm²)	H	W	D	M	N
630	300	300	1600	1000	400	-	-
800	2 x 185	2 x 300	2200	1000	1000	-	-
1000	2 x 240	2 x 400	2200	1000	1000	-	-
1250	-	4 x 185	2200	1000	1000	-	-
1600	-	4 x 400	2200	1000	1000	-	-

Double line version

Wall mounting - Bottom

Rating (A)	Connection section (mm²)	Max. connection section (mm²)	H	W	D	M	N
63	-	50	1000	1000	400	1048	958
100	-	50	1000	1000	400	1048	958
125	-	50	1000	1000	400	1048	958
160	70	95	1000	1000	400	1048	958
250	120	150	1200	1200	400	1248	1158
400	240	240	1200	1200	400	1248	1158

Floor standing - Bottom

Rating (A)	Connection section (mm²)	Max. connection section (mm²)	H	W	D	M	N
630	2 x 150	2 x 300	1600	1200	550	-	-
800	2 x 185	2 x 300	2200	1400	800	-	-
1000	2 x 240	2 x 400	2200	1400	1000	-	-
1250	-	4 x 185	2200	1600	1000	-	-
1600	-	4 x 400	2200	1600	1000	-	-

This document is not a contract. SOCOMEC reserves the right to modify features without prior notice in view of continued improvement. 2008 - 2009

Enclosed ATyS 6 with isolation BY-PASS (continued)

Steel enclosure

Environment

The complete enclosure meets the following environmental requirements:

- operating temperature: -10 to +40 °C without de-rating,
- operating temperature: +40 to +65 °C with de-rating,
- maximum storage is one year,
- 80 % humidity non condensing at +55 °C,
- 95 % humidity non condensing at +40 °C,
- maximum operating altitude without switch de-rating is 2000 m above sea level.

Functional diagram

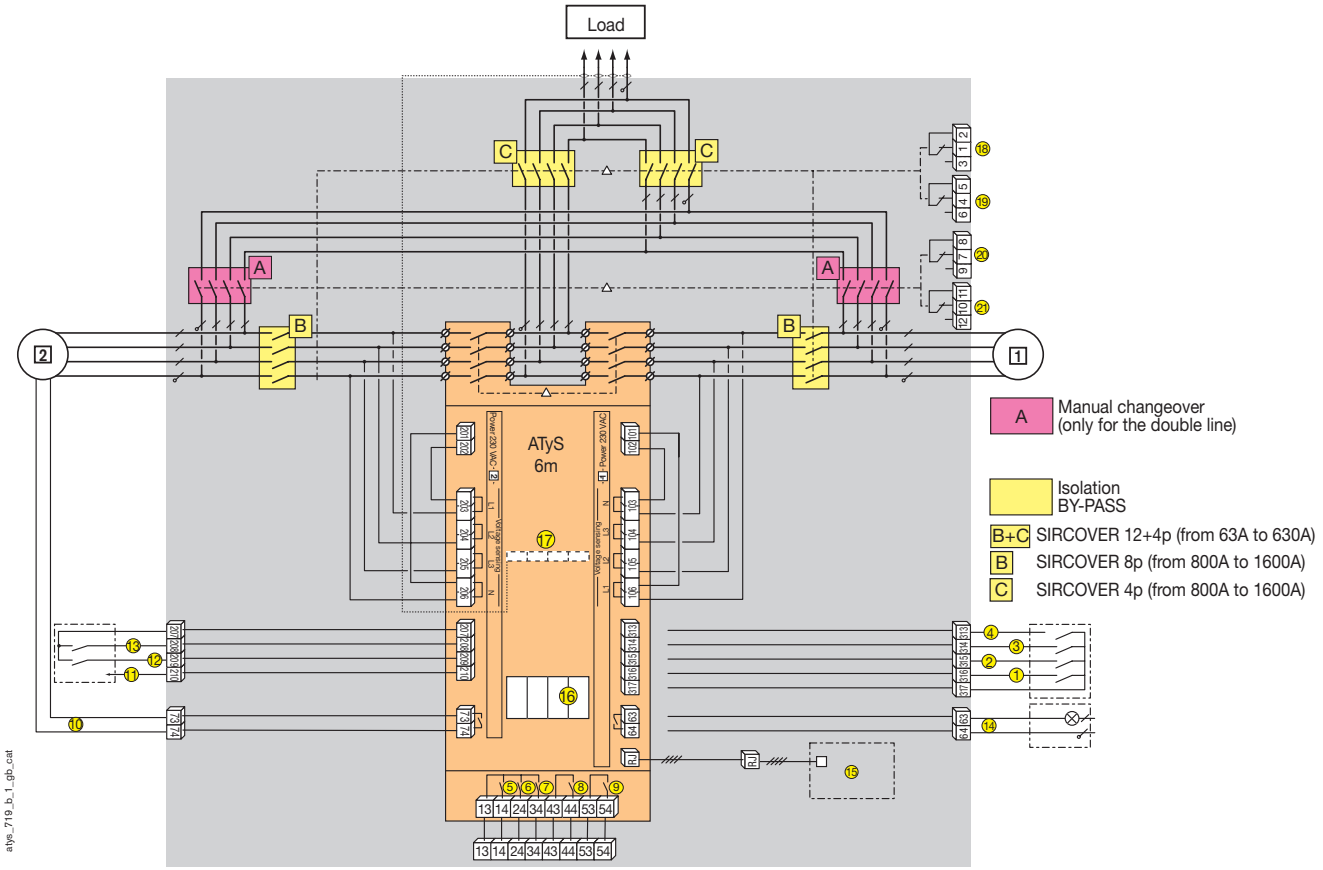

1 Priority source
2 Backup source
1: position 0 control
2: position I control
3: position II control
4: position control inhibition inputs (0-I-II)
5: auxiliary contact, closed when the switch is in position I
6: auxiliary contact, closed when the switch is in position II
7: auxiliary contact, closed when the switch is in position 0
8: auxiliary contact, closed when the switch is on “AUT” mode
9: auxiliary contact, closed when the switch is padlocked
10: gen-set start command
11: auxiliary power supply (for optional modules control)
12: remote “test on-load ”input
13: DTT inhibit input. Transfer initiated as soon as the input is closed when DTT = max. value.
14: fault output
15: remote control interface
16: slots for optional modules
17: 3 current transformers (Cts) for ATyS metering
18: by-pass position
19: ATS position
20: 1 Priority source used
21: 2 Backup source used
101 - 102: supply 1 220 -20% / 240 +20%
201 - 202: supply 2 220 -20% / 240 +20%

This document is not a contract. SOCOMEC reserves the right to modify features without prior notice in view of continued improvement. 2008 - 2009

ATyS
63 to 3200 A

ATyS M - Characteristics (according to IEC 60947)

Thermal current I_{th} (40°C)		63 A	80 A	100 A	125 A	160 A
Rated insulation voltage U_i (V) (power circuit)		800	800	800	800	800
Rated impulse withstand voltage U_{imp} (kV) (power circuit)		6	6	6	6	6
Rated insulation voltage U_i (V) (operation circuit)		300	300	300	300	300
Rated impulse withstand voltage U_{imp} (kV) (operation circuit)		4	4	4	4	4
Rated operational currents I_e (A)						
According to IEC 60947-3						
Rated voltage	Load duty category	A/B(1)	A/B(1)	A/B(1)	A/B(1)	A/B(1)
415 VAC	AC-21 A / AC-21 B	63/63	80/80	100/100	125/125	160/160
	AC-22 A / AC-22 B	63/63	80/80	100/100	125/125	160/160
	AC-23 A / AC-23 B	63/63	80/80	100/100	125/125	125/160
690 VAC(2)	AC-21 A / AC-21 B	63/63	80/80	100/100	125/125	160/160
	AC-22 A / AC-22 B	63/63	80/80	80/80	100/125	100/125
	AC-23 A / AC-23 B	63/63	63/63	80/80	80/80	80/80
According to IEC 60947-6-1						
415 VAC	AC-31 A / AC-31 B	63/63	80/80	100/100	100/125	100/160
	AC-32 A / AC-32 B	63/63	80/80	100/100	100/125	100/160
	AC-33 A / AC-33 B	-/63	-/80	-/80	-/80	-/80
Overload capacity						
Rated short-time withstand current 1 s. I_{cw} (kA rms)		4	4	4	4	4
Short-circuit making capacity (kA peak)(3)		17	17	17	17	17
Prospective short-circuit current (kA rms)(3)		50	50	50	50	50
Associated fuse rated (A)(3)		63	80	100	125	160
Connection						
Minimum Cu cable section (mm^2)		6	6	6	6	6
Maximum Cu cable section (mm^2)		70	70	70	70	70
Tightening torque min / max (Nm)		4/6	4/6	4/6	4/6	4/6
Switching time (nominal voltage)						
I - 0 or II - 0 (ms)(4)		50	50	50	50	50
I - II or II - I (ms)(4)		180	180	180	180	180
Duration of “electrical blackout” I - II (ms) minimum (ATyS M 3s)		60	60	60	60	60
Duration of “electrical blackout” I - II (ms) minimum (ATyS M 6s or 6e)		90	90	90	90	90
Power-supply tolerance						
Supply 230 VAC min / max (VAC)		176/288	176/288	176/288	176/288	176/288
Control supply power demand						
Max current under 230 VAC (A)		30	30	30	30	30
Nominal power (VA)		6	6	6	6	6
Mechanical characteristics						
Endurance (number of operating cycles)		10 000	10 000	10 000	10 000	10 000
Weight switch (kg)		3.5	3.5	3.5	3.5	3.5

(1) A/B: Category with index A = frequent operation / Category with index B = infrequent operation.
(2) With terminal shrouds or phase barrier.
(3) For a rated operating voltage U_e = 400 VAC.
(4) Between the order given and the arrival in position (under the nominal conditions).

This document is not a contract. SOCOMEC reserves the right to modify features without prior notice in view of continued improvement. 2008 - 2009

ATyS - Characteristics (according to IEC 60947)

Thermal current I_{th} (40°C)		125 A	160 A	250 A	400 A	630 A	800 A	1000 A
Rated insulation voltage U_i (V)		800	800	800	800	1000	1000	1000
Rated impulse withstand voltage U_{imp} (kV)		8	8	8	8	12	12	12
Rated operational currents I_e (A)								
According to IEC 60947-3								
Rated voltage	Load duty category	A/B(1)	A/B(1)	A/B(1)	A/B(1)	A/B(1)	A/B(1)	A/B(1)
415 VAC	AC-21 A / AC-21 B	125/125	160/160	250/250	400/400	630/630	800/800	1000/1000
	AC-22 A / AC-22 B	125/125	160/160	250/250	400/400	630/630	800/800	1000/1000
	AC-23 A / AC-23 B	125/125	160/160	250/250	250/250	500/500	800/800	1000/1000
690 VAC(2)	AC-20 A / AC-20 B	125/125	160/160	250/250	400/400	630/630	800/800	1000/1000
	AC-21 A / AC-21 B	125/125	160/160	200/250	200/250	500/500	800/800	800/800
	AC-22 A / AC-22 B	125/125	125/125	125/160	125/160	315/315	800/800	800/800
	AC-23 A / AC-23 B	63/80	63/80	100/125	100/125	160/200	200/250	200/250
220 VDC	DC-20 A / DC-20 B	125/125	160/160	250/250	400/400	630/630	800/800	1000/1000
	DC-21 A / DC-21 B	125/125	160/160	250/250	250/250	630/630	800/800	1000/1000
	DC-22 A / DC-22 B	125/125	160/160	250/250	250/250	500/500	800/800	1000/1000
	DC-23 A / DC-23 B	125/125	125/125	200/200	200/200	500/500	800/800	1000/1000
440 VDC	DC-20 A / DC-20 B	125/125	160/160	250/250	400/400	630/630	800/800	1000/1000
	DC-21 A / DC-21 B	125(3)/125(3)	125(3)/125(3)	200(3)/200(3)	200(3)/200(3)	500(3)/500(3)	800(4)/800(4)	1000(4)/1000(4)
	DC-22 A / DC-22 B	125(3)/125(3)	125(3)/125(3)	200(3)/200(3)	200(3)/200(3)	500(3)/500(3)	800(4)/800(4)	1000(4)/1000(4)
	DC-23 A / DC-23 B	125(4)/125(4)	125(4)/125(4)	200(4)/200(4)	200(4)/200(4)	500(4)/500(4)	800(4)/800(4)	1000(4)/1000(4)
According to IEC 60947-6-1								
415 VAC	AC-31 B	125	160	250	400	630	800	1000
Overload capacity								
Rated short-time withstand current 1 s. I_{cw} (kA rms)		7	7	9	9	13	26	35
Rated peak withstand curent (kA peak)(5)		20	20	30	30	45	55	80
Prospective short-circuit current (kA rms)(5)		100	100	50	18	70	50	100
Associated fuse rated (A)(5)		125	160	250	400	630	800	1000
Connection								
Minimum Cu cable section (mm²)		35	50	95	185	2 x 150	2 x 185	2 x 240
Minimum Cu busbar section (mm²)		-	-	-	-	2 x 30 x 5	2 x 40 x 5	2 x 50 x 5
Maximum Cu cable section (mm²)		50	95	150	240	2 x 300	2 x 300	4 x 185
Maximum Cu busbar width (mm)		25	25	32	32	50	63	63
Tightening torque min / max (Nm)		9/13	9/13	20/26	20/26	20/26	-	-
Switching time								
I - II or II - I (s)(6)		0.75	0.75	1.3	1.3	1.3	2.6	2.6
I - O or II - O (s)(6)		0.45	0.45	0.85	0.85	0.85	1.6	1.6
Duration of "electrical blackout" I - II (s)		0.3	0.3	0.6	0.6	0.6	1.5	1.5
Power-supply tolerance								
Supply 230 VAC min / max (VAC)		176/288	176/288	176/288	176/288	176/288	176/288	176/288
Control supply power demand								
Supply 230 VAC inrush / nominal (VA)		420/80	420/80	420/100	420/100	420/110	450/120	450/120
Mechanical characteristics								
Endurance (number of operating cycles)		10 000	10 000	8 000	8 000	5 000	4 000	4 000
Weight of 3 P switch (ATyS 3) (kg)		3.2	3.3	3.7	4.7	5.2	19.6	23.1
Weight of 4 P switch (ATyS 3) (kg)		3.3	3.4	3.8	5.2	5.7	23.1	24.6
Weight of 3 P switch (ATyS 6) (kg)		4	4.1	4.5	5.5	6	20.4	23.9
Weight of 4 P switch (ATyS 6) (kg)		4.1	4.2	4.6	6	6.5	23.9	25.4

(1) A/B: Category with index A = frequent operation / Category with index B = infrequent operation. (2) With terminal shrouds or phase barrier. (3) 3-pole device with 2 pole in series for the + and 1 pole for the -. (4) 4-pole device with 2 pole in series by polarity. (5) For a rated operating voltage U_e = 400 VAC. (6) Between the order given and the arrival in position (under the nominal conditions).

This document is not a contract. SOCOMEC reserves the right to modify features without prior notice in view of continued improvement. 2008 - 2009

ATyS
63 to 3200 A

ATyS - Characteristics (according to IEC 60947)

Thermal current I_{th} (40°C)		1250 A	1600 A	1800 A	2000 A	2500 A	3200 A
Rated insulation voltage U_i (V)		1000	1000	1000	1000	1000	1000
Rated impulse withstand voltage U_{imp} (kV)		12	12	12	12	12	12
Rated operational currents I_e (A)							
According to IEC 60947-3							
Rated voltage	Load duty category	A/B(1)	A/B(1)	A/B(1)	A/B(1)	A/B(1)	A/B(1)
415 VAC	AC-21 A / AC-21 B	1250/1250	1600/1600	1800/1800	-/2000	-/2500	-/3200
	AC-22 A / AC-22 B	1250/1250	1600/1600	1800/1800	-/2000	-/2500	-/3200
	AC-23 A / AC-23 B	1250/1250	1250/1250	1250/1250	-/1600	-/1600	-/1600
690 VAC(2)	AC-20 A / AC-20 B	1250/1250	1600/1600	1800/1800	-/-	-/-	-/-
	AC-21 A / AC-21 B	800/800	1000/1000	1000/1000	-/-	-/-	-/-
	AC-22 A / AC-22 B	800/800	1000/1000	1000/1000	-/-	-/-	-/-
	AC-23 A / AC-23 B	200/250	500/500	500/500	-/-	-/-	-/-
220 VDC	DC-20 A / DC-20 B	1250/1250	1600/1600	1800/1800	-/-	-/-	-/-
	DC-21 A / DC-21 B	1250/1250	1250/1250	1250/1250	-/-	-/-	-/-
	DC-22 A / DC-22 B	1250/1250	1250/1250	1250/1250	-/-	-/-	-/-
	DC-23 A / DC-23 B	1250/1250	1250/1250	1250/1250	-/-	-/-	-/-
440 VDC	DC-20 A / DC-20 B	1250/1250	1600/1600	1800/1800	-/-	-/-	-/-
	DC-21 A / DC-21 B	1250(3)/1250(3)	1250(3)/1250(3)	1250(3)/1250(3)	-/-	-/-	-/-
	DC-22 A / DC-22 B	1250(3)/1250(3)	1250(3)/1250(3)	1250(3)/1250(3)	-/-	-/-	-/-
	DC-23 A / DC-23 B	1250(3)/1250(3)	1250(3)/1250(3)	1250(3)/1250(3)	-/-	-/-	-/-
According to IEC 60947-6-1							
415 VAC	AC-31 B	1250	1600	1800	2000	2500	-
Overload capacity							
Rated short-time withstand current 1 s. I_{cw} (kA rms)		35	50	50	55	55	55
Rated peak withstand curent (kA peak)(4)		80	110	110	120	120	120
Prospective short-circuit current (kA rms)(4)		100	100	100	-	-	-
Associated fuse rated (A)(4)		1250	1600	1800	-	-	-
Connection							
Minimum Cu busbar section (mm²)		2 x 60 x 5	2 x 80 x 5	3 x 100 x 5	2 x 100 x 10	2 x 100 x 10	2 x 100 x 10
Maximum Cu cable section (mm²)		4 x 185	6 x 185	6 x 185	-	-	-
Maximum Cu busbar width (mm)		63	100	100	100	100	100
Tightening torque min / max (Nm)		20/26	40/45	40/45	40/45	40/45	40/45
Switching time							
I - II or II - I (s)(5)		2.6	2.6	2.6	2	2	2
I - O or II - O (s)(5)		1.6	1.6	1.6	1	1	1
Duration of “electrical blackout” I - II (s)		1.5	1.6	1.6	1	1	1
Power-supply tolerance							
Supply 230 VAC min / max (VAC)		176/288	176/288	176/288	176/288	176/288	176/288
Control supply power demand							
Supply 230 VAC inrush / nominal (VA)		450/120	450/120	450/120	550/390	550/390	550/390
Mechanical characteristics							
Endurance (number of operating cycles)		4 000	3 000	3 000	3 000	3 000	3 000
Weight of 3 P switch (ATyS 3) (kg)		24.6	36.1	36.1	47(6)	51(6)	59(6)
Weight of 4 P switch (ATyS 3) (kg)		29.6	42.1	42.1	57(6)	61(6)	69(6)
Weight of 3 P switch (ATyS 6) (kg)		25.4	36.9	-	47(6)	51(6)	59(6)
Weight of 4 P switch (ATyS 6) (kg)		30.4	42.9	-	57(6)	61(6)	69(6)

(1) A/B: Category with index A = frequent operation / Category with index B = infrequent operation. (2) With terminal shrouds or phase barrier. (3) 4-pole device with 2 pole in series by polarity. (4) For a rated operating voltage U_e = 400 VAC. (5) Between the order given and the arrival in position (under the nominal conditions). (6) Weight for ATyS 3e, 6e and 6m.

This document is not a contract. SOCOMEC reserves the right to modify features without prior notice in view of continued improvement. 2008 - 2009

Dimensions

• **ATyS M 63 to 160 A**

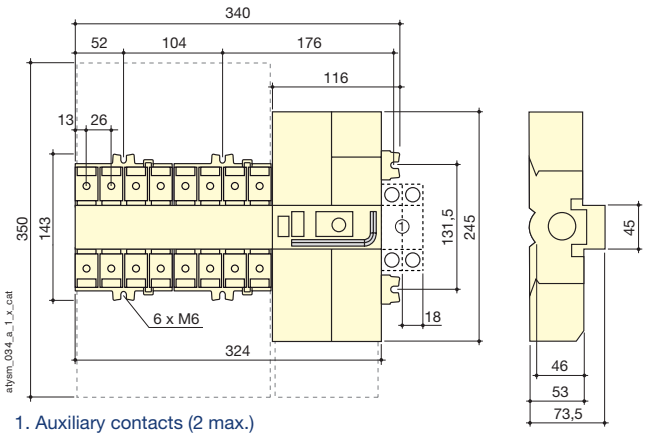

1. Auxiliary contacts (2 max.)

• **Cut out dimension**

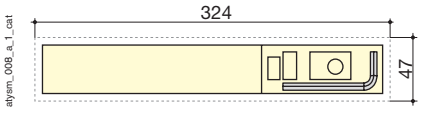

• **ATyS 125 to 630 A**

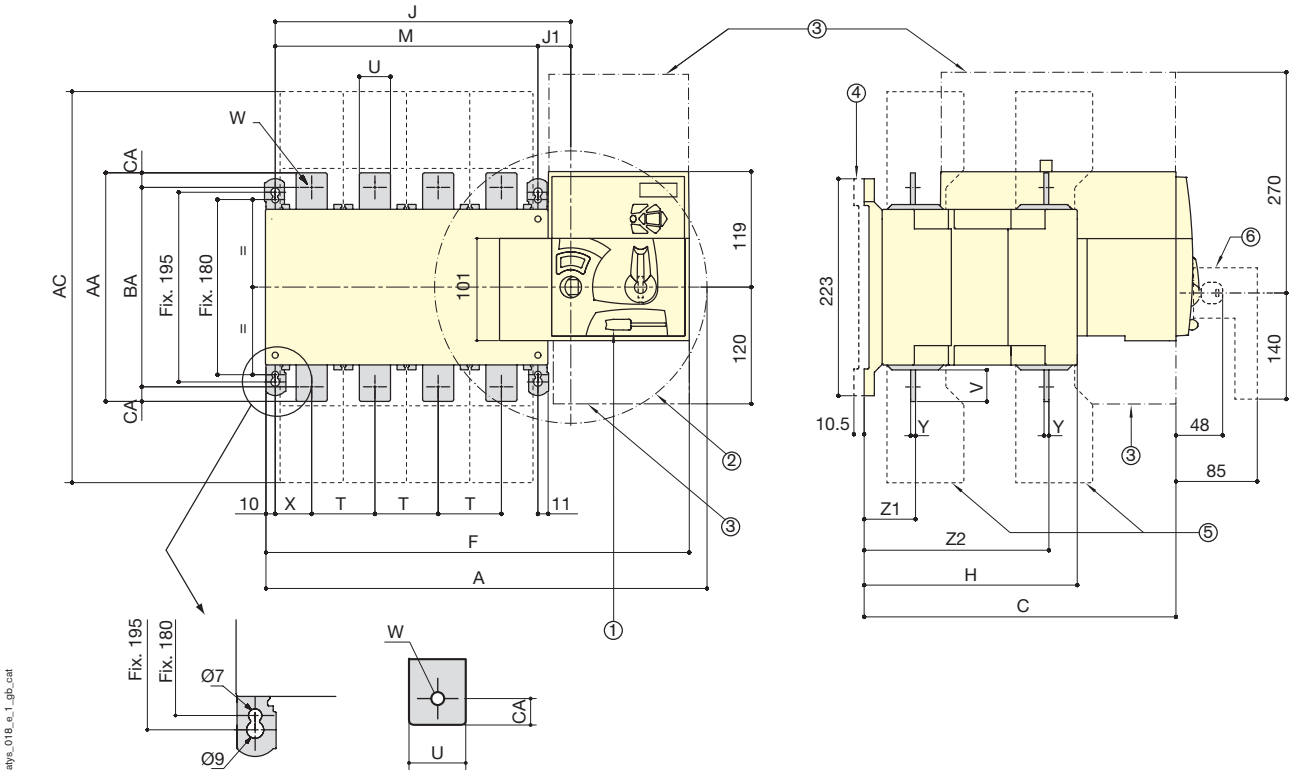

1. Locking bracket with 3 padlocks max
2. Maximum handle radius, operating angle 2 x 90°
3. Connection and disconnection area
4. Mounting spacers
5. Terminal shrouds
6. Handle

Rating	Overall dimensions			Terminal shrouds	Switch body						Switch mounting		Connection terminals											
(A)	A 3p.	A 4p.	C	AC	F 3p.	F 4p.	H	J 3p.	J 4p.	J1	M 3p.	M 4p.	T	U	V	W	X 3p.	X 4p.	Y	Z1	Z2	AA	BA	CA
125	304	340	244	235	286.5	322.5	151	154	184	34	120	150	36	20	25	9	28	22	3.5	38	134	135	115	10
160	304	340	244	235	286.5	322.5	151	154	184	34	120	150	36	20	25	9	28	22	3.5	38	134	135	115	10
250	345	395	244.5	280	328	378	153	195	245	35	160	210	50	25	30	11	33	33	3.5	39.5	134.5	160	130	15
400	345	395	244.5	280	328	378	153	195	245	35	160	210	50	35	35	11	33	33	3.5	39.5	134.5	170	140	15
630	394	459	320.5	400	377	437	221	244	304	34	210	270	65	45	50	13	42.5	37.5	5	53	190	260	220	20

This document is not a contract. SOCOMEC reserves the right to modify features without prior notice in view of continued improvement. 2008 - 2009

ATyS
63 to 3200 A

Functions
References
Accessories
Enclosed ATyS
Characteristics
Dimensions

Dimensions

• **ATyS 800 to 1800 A**

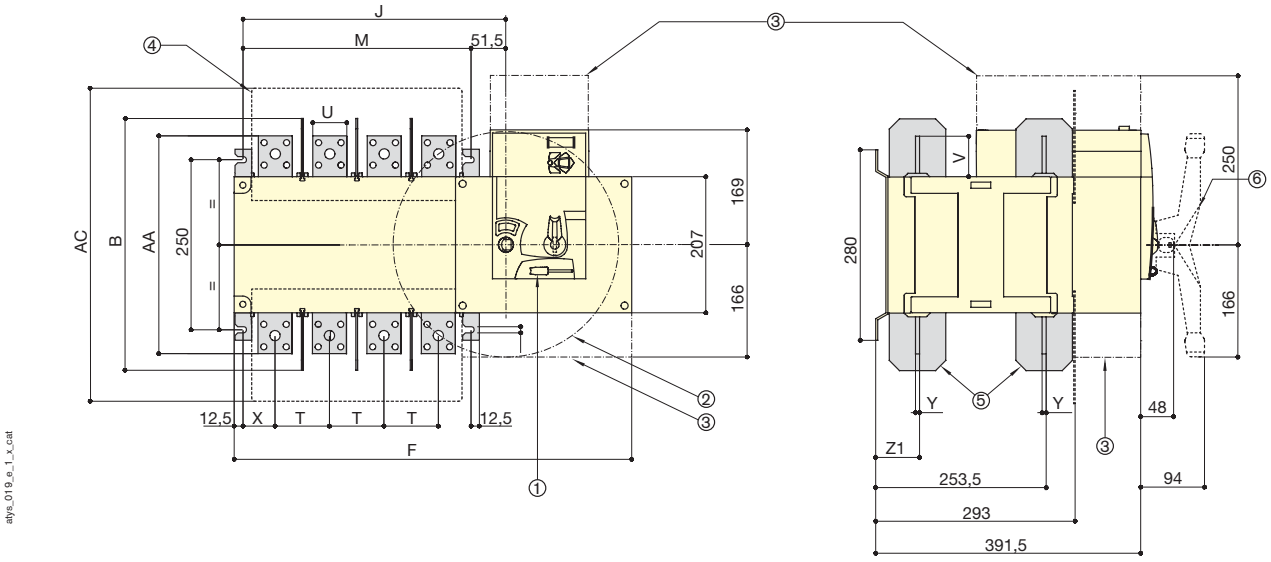

1. Locking bracket with 3 padlocks max
2. Maximum handle radius, operating angle 2 x 90°
3. Connection and disconnection area
4. Terminal screens
5. Phase barrier shield
6. Handle

Rating (A)	Overall dimensions B	Terminal shrouds AC	Switch body F 3p.	F 4p.	J 3p.	J 4p.	Switch mounting M 3p.	M 4p.	Connection terminals T	U	V	X	Y	Z1	AA
800	370	461	504	584	306.5	386.5	255	335	80	50	60.5	60	7	66.5	321
1000	370	461	504	584	306.5	386.5	255	335	80	50	60.5	60	7	66.5	321
1250	370	461	504	584	306.5	386.5	255	335	80	60	65	60	7	66.5	330
1600	380	481	596	716	398.5	518.5	347	467	120	90	44	66	8	67.5	288
1800	380	481	596	716	398.5	518.5	347	467	120	90	44	66	8	67.5	288

• **ATyS 2000 to 3200 A**

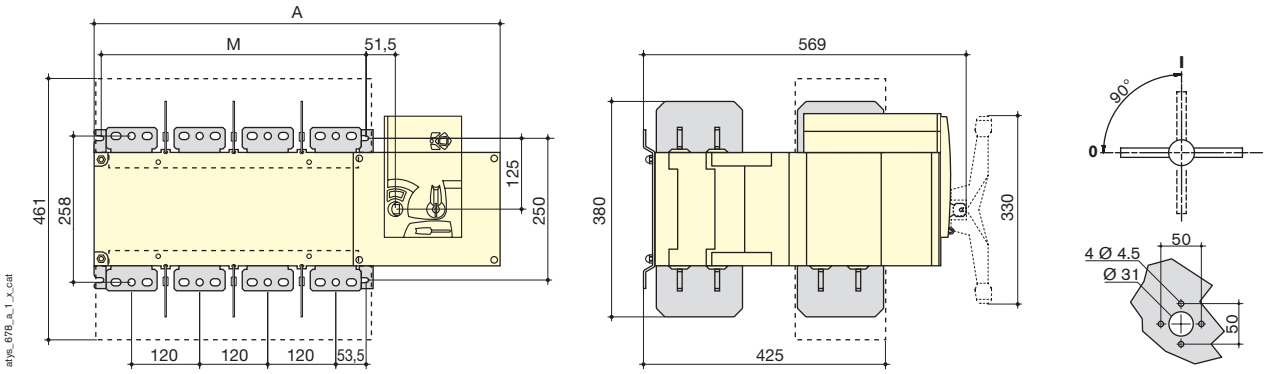

Rating (A)	Overall dimensions A 3p.	A 4p.	Switch mounting M 3p.	M 4p.
2000 ... 3200	596	716	347	467

This document is not a contract. SOCOMEC reserves the right to modify features without prior notice in view of continued improvement. 2008 - 2009

Dimensions

Cut out dimension

• **ATyS 125 to 630 A**

ATyS 3s

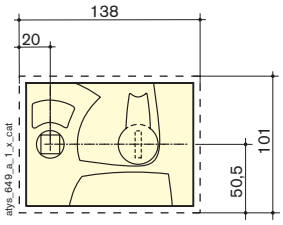

ATyS 3e, 6e, 6m

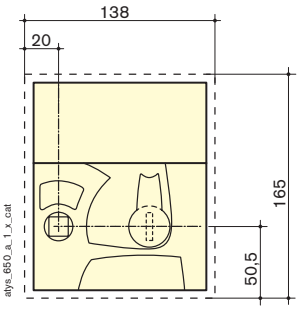

• **ATyS 800 to 1800 A**

ATyS 3s

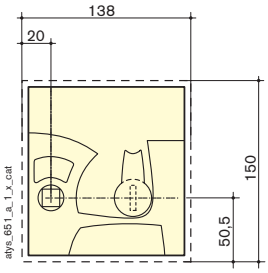

ATyS 3e, 6e, 6m

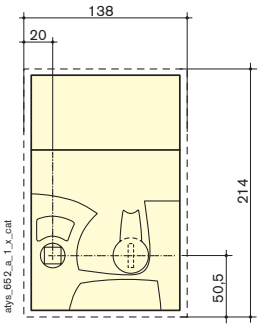

Connection terminals

• **ATyS 800 to 1000 A**

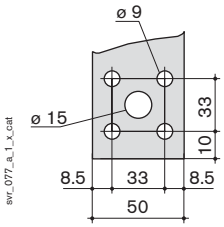

• **ATyS 1250 A**

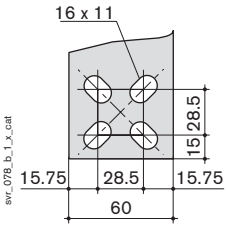

• **ATyS 1600 to 3200 A**

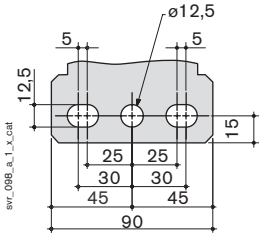

Copper bars connection kits

• **Fig. 1**

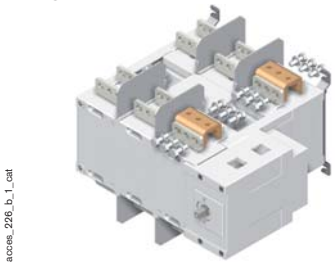

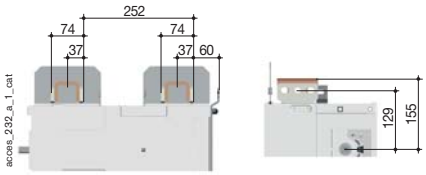

• **Fig. 2**

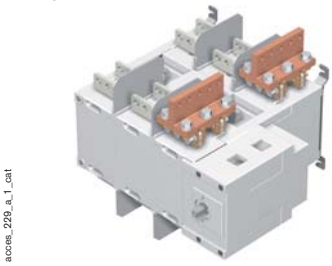

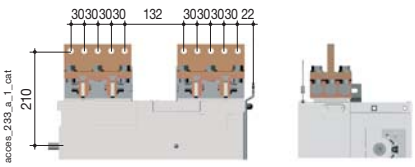

• **Fig. 3**

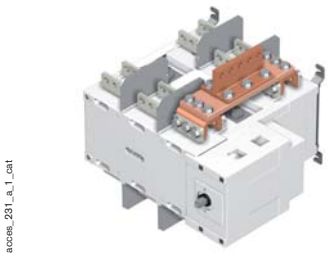

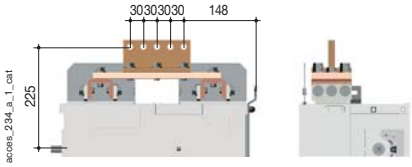

This document is not a contract. SOCOMEC reserves the right to modify features
without prior notice in view of continued improvement. 2008 - 2009

ATyS C30
ATyS C40

atys_448_b_1_cat

atys_599_b_1_cat

Functions

ATyS C30 / C40 allows any type of changeover control: ATyS 3, SMV, contactors, circuit breakers or other motorised switches.

Conformity to standards

- IEC 61010-1
- IEC 61000-4-2
- IEC 61000-4-3
- IEC 61000-4-4
- IEC 61000-4-5
- IEC 61000-4-6
- IEC 61000-4-8
- IEC 61000-4-11
- IEC 60068-2-6
- IEC 60068-2-11
- IEC 60068-2-30

General characteristics

- Modular design (6 modules).
- DIN rail mounting.
- 2 outputs relays for changeover control.

ATyS C30

- ATyS D10 or D20 possible connection.
- Inputs for auxiliary contacts position.
- Metering 3U on network 1.
- Metering 1U on network 2.
- 1 start/stop generator contact.
- Programmable inputs.
- Programmable outputs.

ATyS C40

- Dual gensets controller with a redundant genset application cycle.
- Single phase sensing on Gen1 & Gen 2.
- Programmable inputs.
- Programmable output.
- 2 start Gen contacts (Gen1 & Gen2).

This document is not a contract. SOCOMEC reserves the right to modify features without prior notice in view of continued improvement. 2008 - 2009

References

	ATyS C30	ATyS C40
	References	References
Supplied from measurement circuit	1599 **3030**	-
Power supply DC	1599 **3031**	1599 **3040**

Characteristics

Supplied from measurement circuit	110 … 400 VAC
Power supply DC	< 9 … 30 VDC
Measurement range	110 … 400 VAC / ± 10 %
Fréquence	50 / 60 Hz
Accuracy	± 1 %

Applications

ATyS C30

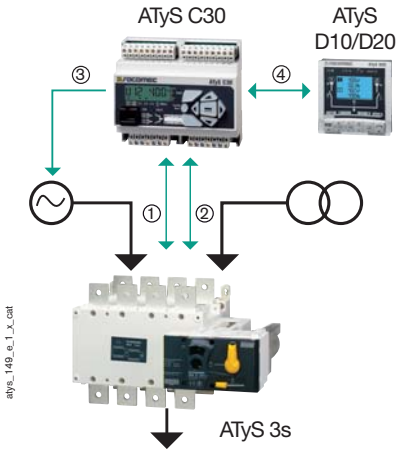

1. Measurement and power supply
2. Control and position information feedback
3. Generating set "start/stop"
4. ATyS interface connection

ATyS C40

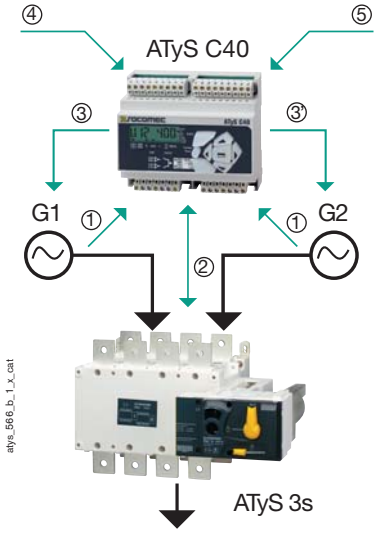

1 & 1'. Generating sets measurment
2. Control and position information feedback
3 & 3'. Generating set "start/stop" control
4. External "start/stop" command for basic cycle
5. DC power supply

Terminals

ATyS C30

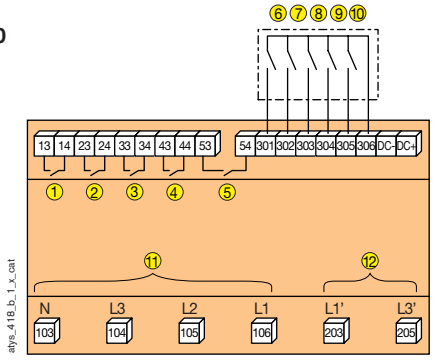

1. Generator 1 start / stop control
2. Pos 1: control
3. Pos 2: control
4. O1 programmable output
5. O2 programmable output
6. CA1: auxiliary contact position 1
7. CA0 : auxiliary contact position 0
8. CA2 : auxiliary contact position 2
9. I1 : programmable input
10. I2 : programmable input
11. 3 U network 1 and alimentation measurement
12. 1 U network 2 and alimentation measurement

ATyS C40

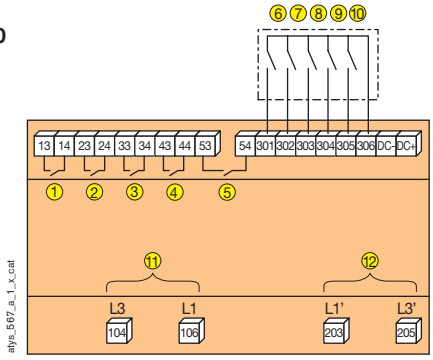

1. Generator 1 start / stop control
2. Pos 1: control
3. Pos 2: control
4. O1 programmable output
5. Generator 2 start / stop control
6. CA1: auxiliary contact position1
7. I3 : programmable input
8. CA2 : auxiliary contact position2
9. I1 : programmable input
10. I2 : programmable input
11. Metering 1U + frequency generator 1
12. Metering 1U + frequency generator 2

This document is not a contract. SOCOMEC reserves the right to modify features without prior notice in view of continued improvement. 2008 - 2009

ATyS VISION software

couv_128_a_1_cat

Functions

ATyS VISION is the monitoring and control software for ATyS 3e, 6e and 6m ranges.
It operates in a Windows® 98, NT4 (pack 6), Millenium, 2000 or XP environment with a minimum PC configuration of: Pentium® II, 64 Mb RAM, hard disk space of at least 200 Mb, one or more RS232 or RS485 serial ports, a 17" VGA 1024 x 768 screen.

General characteristics

The ATyS VISION software allows you to visualise:
- product status,
- all instantly measured electrical values,
- product configuration parameters,
- timer values,
- input and output status.

For each ATyS, you can export the configuration parameters to EXCEL.

ATyS VISION is available in a multilingual version with the following languages:

- english,
- french,
- german,
- italian,
- spanish,
- chinese,
- polish.

Versions and characteristics

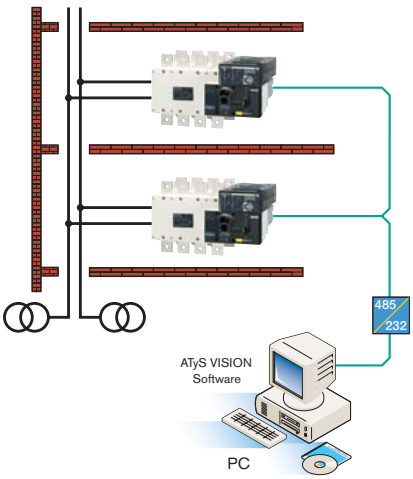

ats_572_a_1_gb_cat

ATyS VISION displays all the electrical values measured, configures the ATyS parameters and allow remote testing.
The user will also be able to import or export the configuration parameters with EXCEL.

bd_03_03_01

Find on the SOCOMEC Web Site www.socomec.com

This document is not a contract. SOCOMEC reserves the right to modify features without prior notice in view of continued improvement. 2008 - 2009

Specification

ATyS status

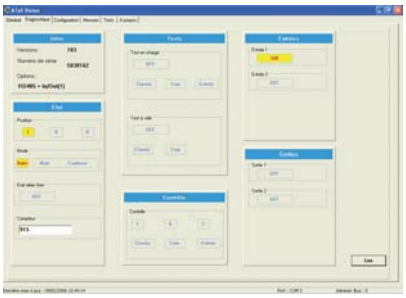

ATyS 608_a_1_x_cat

Display:
- ATyS software version,
- serial number,
- connected input/output modules,
- input/output status,
- product status,
- test status.

ATyS configuration

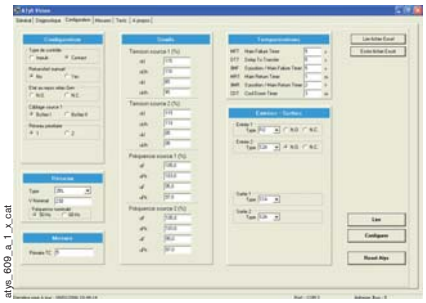

ATyS 609_a_1_x_cat

Settings:
- communication parameters,
- automatic recognition product.

Configuration:
- product configuration,
- network type,
- voltage and frequency thresholds,
- timers,
- inputs/outputs,
- Excel import or export capability.

Measurement

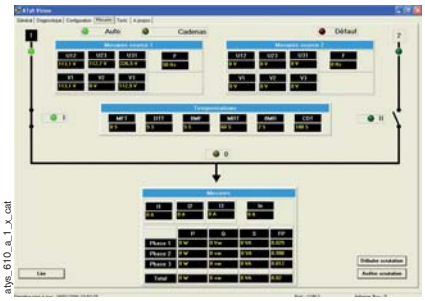

ATyS 610_a_1_x_cat

Measurement:
- normal and backup sources voltage and frequency measurment,
- current measurment I1, I2, I3 I_n (measurment ATyS 6m only),
- power P, Q, S per phase and total (measurment ATyS 6m only),
- power factor per phase (measurment ATyS 6m only),
- timer values and countdown,
- source status, switch position.

Remote testing & control

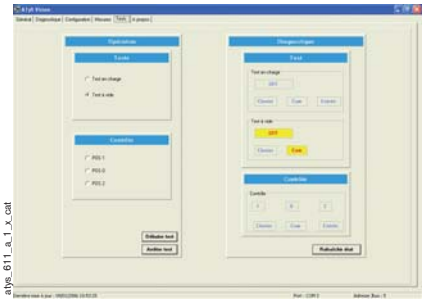

ATyS 611_a_1_x_cat

Test:
- on load (with load transfer),
- off load (remote starting and stopping of generating set),
- product monitoring in position I, 0 or II.

bd_03_03_01

Find on the SOCOMEC Web Site www.socomec.com

This document is not a contract. SOCOMEC reserves the right to modify features without prior notice in view of continued improvement. 2008 - 2009

Other changeover switches

bd_03_04_01

Though SOCOMEC offers a large range of changeover switches, special adapted products are also available.
These 2 pages show few examples of such special realisations.
Do not hesitate to consult us.

Conformity to standards
- IEC 60947-3
- BS EN 60947-3
- EN 60947-3
- NBN EN 60947-3
- VDE 0660-107 (1992)

ATS BY-PASS switches

swr_134_a_1_x_cat

Functions
They are used to isolate a changeover switching device and changeover the load to an emergency supply.

General characteristics
- 125 to 630 A ratings, 12 + 4 pole (only 4 pole).
- 3 stable positions.

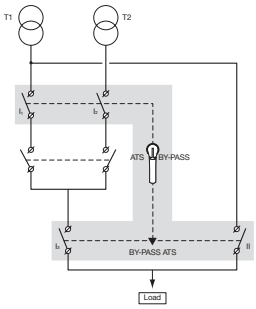

atys_746_a_1_gb_cat

SIDER changeover switches

sider_070_a_1_cat

Functions
They are manually operated three or four-pole switches.
They provide switching, source inversion and changeover under load for two low voltage power circuits, as well as their safety isolation.

General characteristics
- 125 to 1600 A ratings, 3 and 4 pole.
- 3 stable positions (I, 0, II) and facility to switch from one to the other under load (AC-22 and AC-23).
- Fully visible breaking.
- Double visible breaking.

This document is not a contract. SOCOMEC reserves the right to modify features without prior notice in view of continued improvement. 2008 - 2009

Make before break contact motorised changeover switches

alys_003_a_1_cat

Functions

They provide switching, uninterrupted low voltage source inversion and safety isolation.

They are intended to be coupled with a UPS (I, I+II, II).

General characteristics

- 125 to 1600 A ratings, 3 and 4 pole.
- 3 stable positions (I - I+II - II).
- Uninterrupted automatic switching and source inversion under load with a UPS.
- Emergency manual operation.
- Padlocking in position 0 or the 3 positions on request.

Motorised mixed pole changeover switches

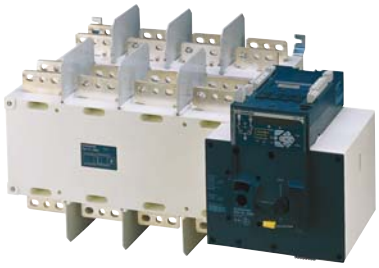

alys_725_a_1_cat

Functions

They provide switching and source inversion for low voltage sources of different power ratings.

General characteristics

- 1250 to 3200 A ratings, 3 and 4 pole.

This document is not a contract. SOCOMEC reserves the right to modify features without prior notice in view of continued improvement. 2008 - 2009

SELECTION GUIDE

FUSE COMBINATION SWITCHES

APPLICATIONS

- Transformer output
- Section feeders
- Section incomers
- Motor circuits
- Semi-conductor protection
- Enclosed switches

CHARACTERISTICS

STANDARD
- IEC 60947-3

OPERATION
- Manual
- Tripping

DIRECT OPERATION
- Front
- Side
- Through panel

DOOR INTERLOCKED EXTERNAL OPERATION
- Front
- Right side
- Left side

BREAKING
- Fully visible
- Visible

SWITCH BODY
- Modular

FUSE TYPE
- BS88
- NFC / DIN

PAGES

This document is not a contract. SOCOMEC reserves the right to modify features without prior notice in view of continued improvement. 2008 - 2009

As well as the rating of the protective device, the selection is conditioned by:
- the conditions of use (number of operations, general level of installation, terminal level, receiver type),
- the requirements of the standards and the functional specifications of the fuses (BS88, NFC, DIN, UL, UR…),
- the control functionalities (manual, automatic…),
- the type of installation in the enclosure (on a door, at the back of a cabinet…).

We remain at your disposal to study together any adaptation to specific requirements which cannot be covered by this standard offer. Do not hesitate to consult us.

	fuser_530_a_2_cat **FUSERBLOC 20 to 1 250 A**	fuser_437_a_2_cat **FUSERBLOC and high speed (UR)**	fusom_063_a_1_cat **FUSOMAT 250 to 1 250 A**	fuser_597_a **Multipolar switches & mixed ratings**
			●	
	●		●	
	●		●	
	●		●	fuser_592_a **Handle between poles**
		●		
	●			
				fuser_437_a **Semi conductor protection (DRIVES, UPS…)**
	•	•	•	
	•	•	•	
			•	
	•	•	•	
	•	•	•	fuser_426_a
	•			
	•	•	•	
	•	•	•	**Fused changeover switches**
	•	•	•	
	•	•	•	
		•	•	flexy_027_a
	•			
	•		•	**Plug-in fuse combination switches**
	•	•	•	
	see page A.158	see page A.200	see page A.208	see page A.220

This document is not a contract. SOCOMEC reserves the right to modify features without prior notice in view of continued improvement. 2008 - 2009

The FUSERBLOC range

Your Guarantee for safe & reliable switching & protection

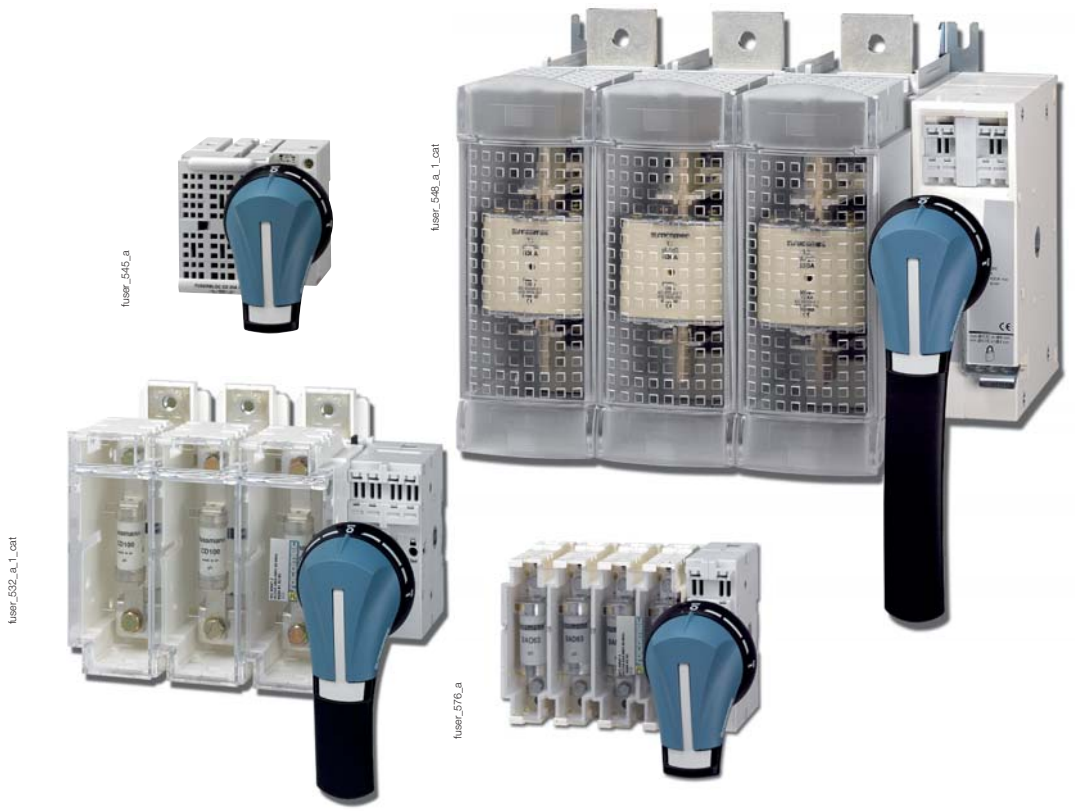

Switch breaking

Safety isolating

Fully visualised breaking, conforming to IEC 60947-3 (BS EN 60947-3) standards, guarantees contact opening on each pole when the device is in “OFF” position.
The forced opening of contacts is performed by a positive operation mechanism. Padlockable with up to three padlocks in OFF position is also possible. Breaking upstream and downstream of the fuse enables its safe replacement, even if there is residual voltage in the circuit.

On-load breaking

This is possible in the most arduous load duty (AC 23 A, 690 V). High speed breaking of each pole is independant from the speed of the operator’s manoeuvre. Tipped contacts and four breaking points per pole guarantee a high number of operations.

Protection by fuses

Performance

- High breaking capacity: 100 kA (DIN fuses), 80 kA (BS fuses).
- Very effective limitation of short circuits.
- Total discrimination between 2 gG.

Reliability

Fail-safe protection at all times is guaranteed by simple design and operation (Joule effect).

Safety

Released energy when eliminating a fault is contained within the fuse cartridge.

NFC, DIN, BS and UR ranges

Fuse curve characteristics are standardised as per IEC 60269 2-1.

This document is not a contract. SOCOMEC reserves the right to modify features without prior notice in view of continued improvement. 2008 - 2009

A proven technology

Total isolation between poles

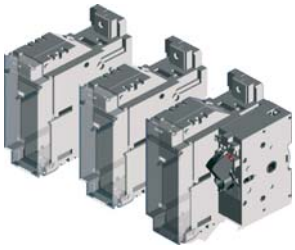

fuser_608_a

Modulable construction enables each phase to be completely segregated from the other avoiding any internal problems such as arcing and cross contamination.

Flexible modulable construction

The unique construction enables the creation of single pole to multiple pole switch configurations, it allows different ratings from 32 to 1250 A to be mixed in the same device.

Safe replacement of the fuses

fuser_609_a

Due to the double break system, the fuses are completely isolated from both the supply and the load enabling fuse replacement under totally safe conditions.

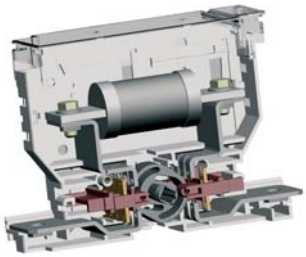

fuser_610_a

Superior electrical characteristics

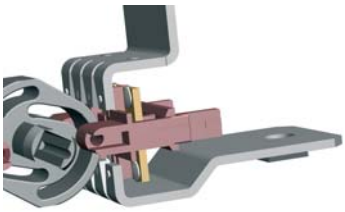

fuser_611_a

Four breaking points in series per pole with alloy contact points ensure very high breaking characteristics under 690 VAC.

Certified solutions

IEC 60947-3

The entire FUSERBLOC range has been fully tested and certified in accordance with the current international standard IEC 60947 as switch disconnector fuses.

With a high short circuit withstand of 80 kA (BS) and 100 kA (DIN) under 690 V the FUSERBLOC can be utilised in the most arduous conditions.

Enhanced product lifetime

The widely used switching principle guarantees maximum reliability over time.

The contact point technology employed remains effective and provides an enhanced product lifetime even in arduous operating conditions such as highly polluted or corrosive environment.

This document is not a contract. SOCOMEC reserves the right to modify features without prior notice in view of continued improvement. 2008 - 2009

The FUSERBLOC range

Maximum flexibility for ease of integration

Front or side operation

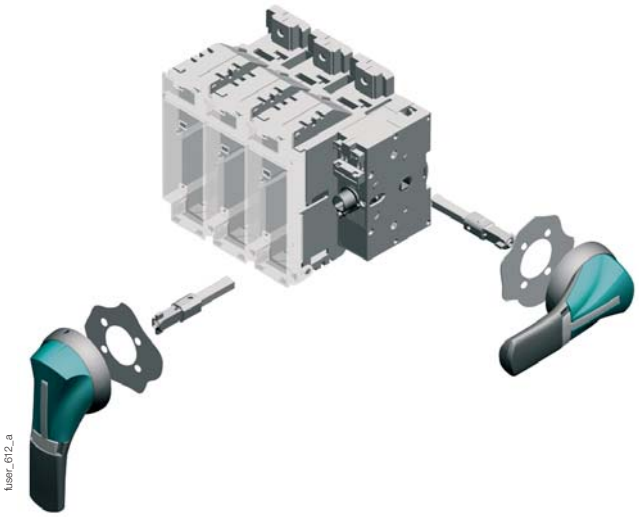
fuser_612_a

- Total flexibility is assured from 20 through to 1 250 A as the same standard switches can be utillsed for either front, side, direct or external operation simply be selecting the appropriate accessories.
- Black or Red / Yellow IP55 and IP65.
- ON-OFF or ON-OFF-TEST handles are available.
- Padlocking by means of three padlocks.
- The external front operation enables the door to be interlocked (cannot be opened) when the switch is in the ON position or when padlocked.
- Defeatable & non-defeatable variations are available. This feature enables the door to be opened whilst the switch is in the ON position through intervention of a qualified operator and the appropriate tooling.

Time saving

fuser_613_a

The patented design enables the handle to be fixed from the outside if desired.

Front/rear connections

Front and rear connections variations are available for the complete range from 32 to 1250 A. Providing the best solution for each application.

For FUSERBLOC 630 to 1250 A a patented solution allows customers to configure the switch terminals from front to rear connections without any supplementary accessories.

This innovative modification is achieved through a simple rotation of the terminals.

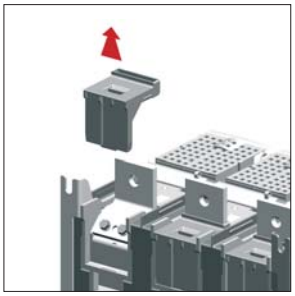
fuser_638_a

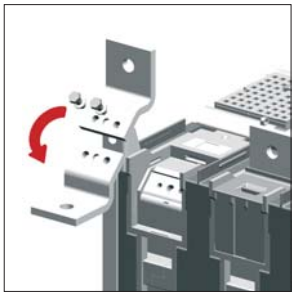
fuser_639_a

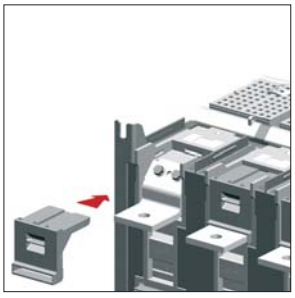
fuser_640_a

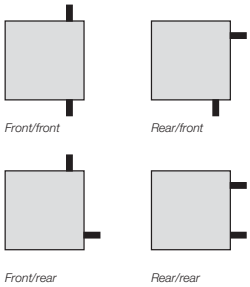

This document is not a contract. SOCOMEC reserves the right to modify features without prior notice in view of continued improvement. 2008 - 2009

Integrated features for all you needs

Neutrals

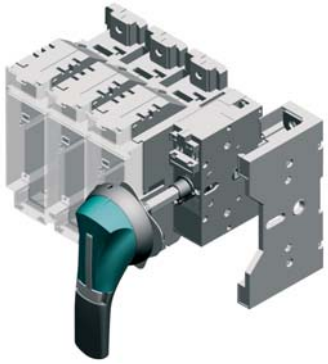

fuser_618_a

"Integrated" solid neutrals are available for the full range from 20 to 1250 A. Easy to fit to the side of the FUSERBLOC. This feature provides a TPN switch with the same foot print and phase centres than a 3 pole switch.

This Compact, flexible and cost effective solution for TPN applications is ideally suited for high density panel board or switchboard applications.

Test feature

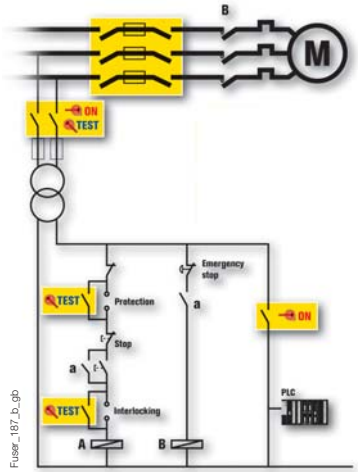

Fuser_187_b_gb

The energising of the control circuits without switching the main power. Enables safe testing and commissioning of control circuits.

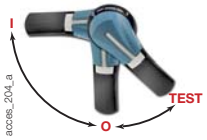

acces_204_a

The three position handle (ON-OFF-TEST) enables the auxiliary control circuits to be tested without switching on the main power.

It provides an efficient alternative to a separate wired push button or cam switch.

Programmable U type auxiliary contacts

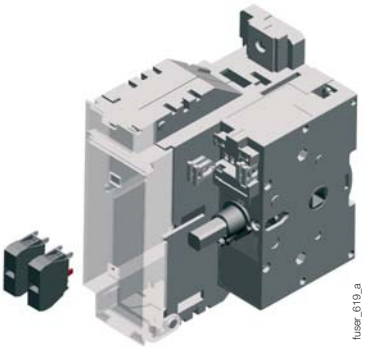

fuser_619_a

The FUSERBLOC range now includes the fully integrated auxiliary contacts holder from 20 to 1250 A.

A patented system enables the user to easily programme the auxiliary contacts to operate in ON only, Test only or Test + ON positions.

The snap-on contacts blocks are fitted from the front and it is easy to retrofit additional contact blocks.

Shaft padlocking

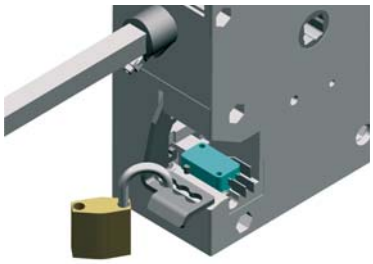

fuser_620_a

The FUSERBLOC can be padlocked door open for with maximum safety.

The shaft padlocking facility is standard on the complete range from 32 to 1250 A.

The 630 to 1250 A ratings also have an integrated function for remote indication of padlocking. This innovative feature is interesting in today's plants where remote indication is increasingly required.

Flat mounting

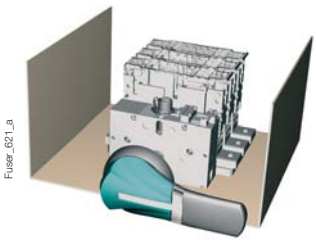

Fuser_621_a

The design of the FUSERBLOC range from 20 to 1250 A enables flat mounting as standard.

Flat mounting is ideal for withdrawable MCC applications. Enabling overall compartment sizes to be reduced and easy access for fuse replacement.

This document is not a contract. SOCOMEC reserves the right to modify features without prior notice in view of continued improvement. 2008 - 2009

FUSERBLOC
20 to 1250 A

Functions
Illustrations
References BS88
References NFC and DIN
Accessories
Enclosed fuse switches
Characteristics
Dimensions

fuser_545_a

fusr_576_a_1_cat

fuser_532_a_1_cat

fuser_548_a_1_cat

Functions

FUSERBLOC are manually operated multipolar fuse combination switches. They break or switch off on load and provide safety isolation and protection against overcurrent for any low voltage electrical circuit.

Conformity to standards

- IEC 60947-3
- IEC 60269-1
- IEC 60269-2
- EN 60947-3
- DIN 43620
- VDE 0636-10
- VDE 0660-107

Approvals and certifications

- GOST (Russia)
- ASEFA
- CEBEC (Belgium)
- FI (Finland)
- KEMA
- Lloyd's Register of Shipping
- LOVAG
- BBJ Poland (attestation of verification)
- CCA
- EZU
- PSA E03.15.605.G
- RENAULT EB03.15.613

General characteristics

- Fully visualised breaking.
- Double break by phase (top and bottom of fuse).
- Protection against overcurrent by fuse circuit-breakers (gG, aM, UR, BS88) with high breaking capacity (100 kA eff.).
- IP2 protection with terminal shrouds.
- Compact.
- TEST position for testing control circuits without power using U type auxiliary contacts.

Available on request

- FUSERBLOC with rear top or bottom connections.
- FUSERBLOC with rear top or bottom plug in connections.
- Multipolar FUSERBLOC providing various coupling possibilities such as:
  - FUSERBLOC 3 x 400 A + 3 x 50 A with front or side operation,
  - FUSERBLOC 12 x 160 A + 3 x 50 A with front or side operation.
- FUSERBLOC UL and CSA for the North American markets (see A.290 page).
- FUSERBLOC with left side operation, please consult us.

This document is not a contract. SOCOMEC reserves the right to modify features without prior notice in view of continued improvement. 2008 - 2009

Illustrations

FUSERBLOC 20 to CD 32 A - Direct and external operation

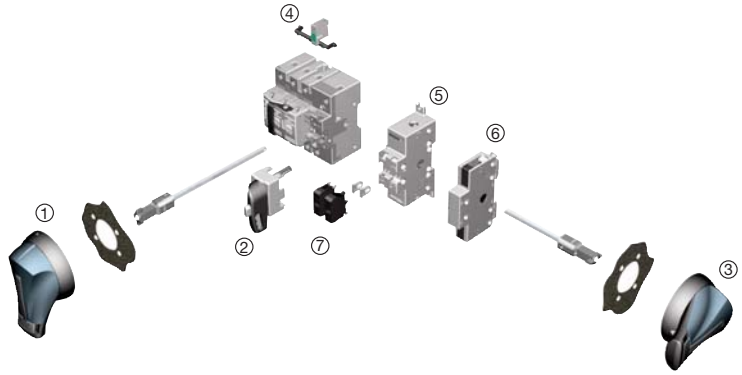

fuser_588_a_1_x_cat

Functional diagram (for further details see the installation instructions supplied with every device).

1. Door interlocked external front handle.
2. Direct front handle.
3. Door interlocked external right side handle.
4. Fuse blown indication device 14 x 51.
5. Additional U type AC block holder.
6. Modular AC block 1 or 2 NO/NC ACs for pre-break and signalling or TEST.
7. 2x2 configurable U type ACs, for pre-break and signalling or TEST.

FUSERBLOC 32 to 400 A - Direct operation

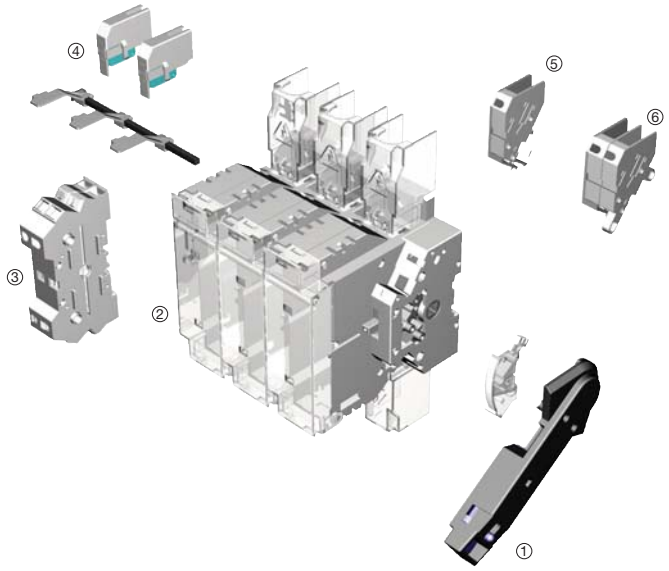

fuser_589_a_1_x_cat

1. Direct right side handle.
2. Fuse screen cover (supplied as standard).
3. S, ST type block.
4. Fuse blown indication device.
5. 1 NO/NC AC for pre-break and signalling.
6. 2 NO/NC ACs for pre-break and signalling.

FUSERBLOC 630 to 1250 A - Direct operation

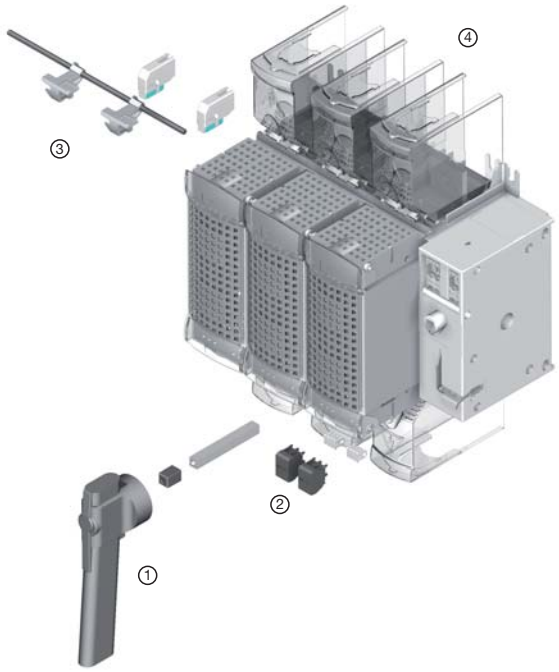

fuser_665_a_1_x_cat

1. Direct front handle.
2. 2x4 configurable U type ACs, for pre-break and signalling.
3. Fuse blown indication device.
4. Terminal shrouds.

FUSERBLOC
20 to 1250 A

Functions
Illustrations
References BS88
References NFC and DIN
Accessories
Enclosed fuse switches
Characteristics
Dimensions

Illustrations

FUSERBLOC 32 to 400 A - External front or right side operation

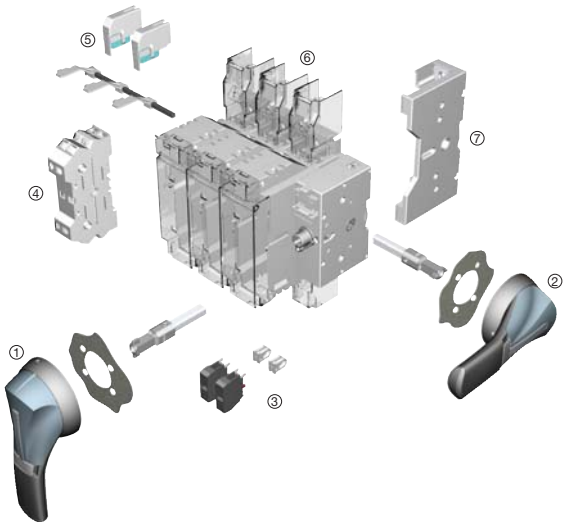

fuser 586 a_1_x_cat

1. Door interlocked external front handle.
2. Door interlocked external right side handle.
3. 2x2 configurable U type ACs, for pre-break and signalling or TEST of 32 to 160 A (2x4 ACs of 250 to 400 A).
4. S, ST type block.
5. Fuse blown indication device.
6. Terminal shrouds.
7. Integrated solid neutral link.

FUSERBLOC 630 to 1250 A - External front or right side operation

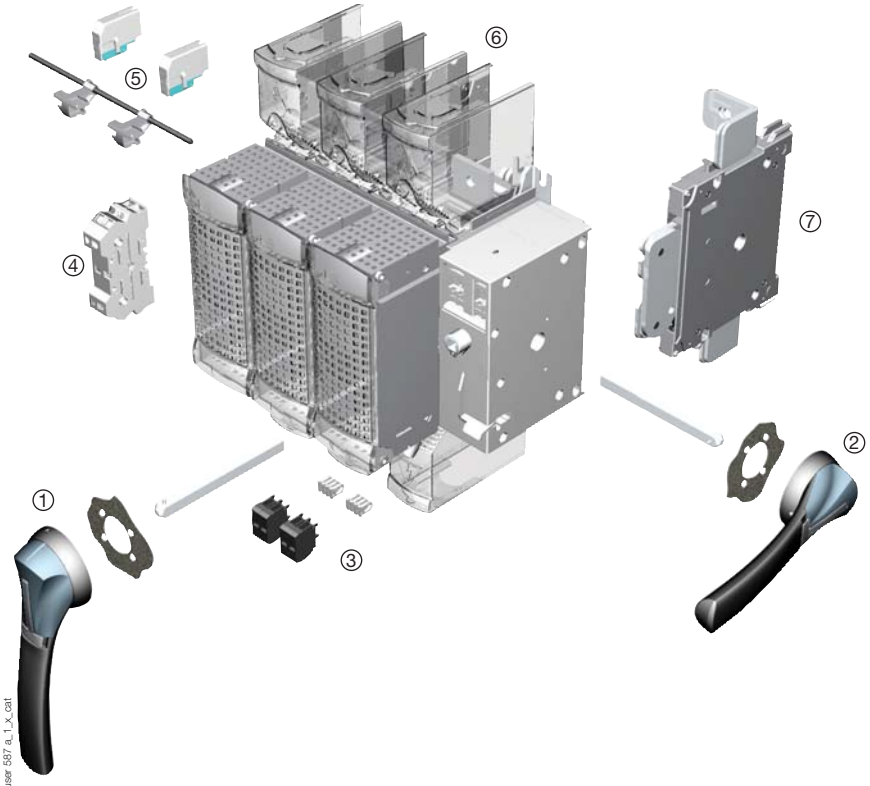

fuser 587 a_1_x_cat

1. Door interlocked external front handle.
2. Door interlocked external right side handle.
3. 4x2 configurable U type ACs, for pre-break and signalling.
4. S, ST type block.
5. Fuse blown indication device.
6. Terminal shrouds.
7. Integrated solid neutral link.

This document is not a contract. SOCOMEC reserves the right to modify features without prior notice in view of continued improvement. 2008 - 2009

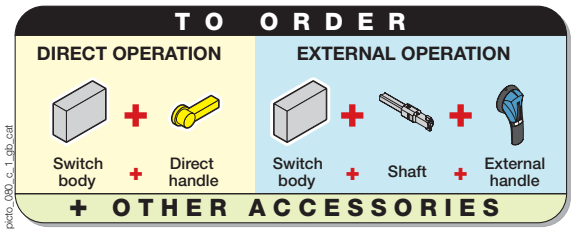

References

BS88 - External front or right side operation

Rating (A) / Fuse size* / Frame size	No. of poles	Switch I-0-TEST	CHANGEOVER switch I-0-II	Integrated solid neutral link	Door interlocked external front handle	Door interlocked TEST external front handle	Door interlocked external right-side handle	Door interlocked CHANGEOVER external front handle	Shaft extensions for external handle	Terminal shrouds(1)	Additional contact holder for U type AC(2)
20 / A1 / 0	3 P	3641 **3000**	3680 **3000**	-	Padlockable I-0 S1 type Black IP55 1411 **2111**(3) Red/Yellow IP65 1414 **2111**	Padlockable I-0-TEST S1 type Black IP65 1413 **2115**(3) Red/Yellow IP65 1414 **2115**	Padlockable I-0 S1 type Black IP55 1415 **2111**(3) Red/Yellow IP65 1418 **2111**	Padlockable I-0-II S1 type Black IP55 1411 **2113**(3) Red/Yellow IP65 1414 **2113**	320 mm 1401 **0532**	-	3999 **0710**
	3 P + switch neutral	3641 **4000**	3680 **4000**								
	3 P + solid neutral	3641 **5000**	-								
CD 32 / A1 / 0	3 P	3641 **3001**	3680 **3001**								
	3 P + switch neutral	3641 **4001**	3680 **4001**								
	3 P + solid neutral	3641 **5001**	-								
32 / A1 / 11	2 P	3841 **2003**	-						320 mm 1400 **1032**	standard	3999 **0600**
	3 P	3841 **3003**	3880 **3003**								
	4 P	3841 **6003**	3880 **6003**								
63 / A2-A3 / 12	2 P	3841 **2006**	-								
	3 P	3841 **3006**	3880 **3006**								
	4 P	3841 **6006**	3880 **6006**								
100 / A4** / 13	2 P	3841 **2010**	-	3829 **9310**	Padlockable I-0 S2 type Black IP55 1421 **2111**(3) Red/Yellow IP65 1424 **2111**	Padlockable I-0-TEST S2 type Black IP65 1423 **2115**(3) Red/Yellow IP65 1424 **2115**	Padlockable I-0 S2 type Black IP55 1425 **2111**(3) Red/Yellow IP65 1428 **2111**	Padlockable I-0-II S2 type Black IP55 1421 **2113**(3) Red/Yellow IP65 1424 **2113**		2 P 3998 **2016** 3 P 3998 **3016** 4 P 3998 **4016**	
	3 P	3841 **3010**	3880 **3010**								
	4 P	3841 **6010**	3880 **6010**								
CD 160 / A3-A4** / 13a	2 P	3841 **2014**	-	3829 **9320**							
	3 P	3841 **3014**	3880 **3014**								
	4 P	3841 **6014**	3880 **6014**								
160 / A4 / 14	2 P	3841 **2015**	-								
	3 P	3841 **3015**	3880 **3015**								
	4 P	3841 **6015**	3880 **6015**								
160 / B1-B2 / 14	2 P	3841 **2016**	-								
	3 P	3841 **3016**	3880 **3016**								
	4 P	3841 **6016**	3880 **6016**								

Auxiliary contacts pre-break and signalisation I-0-TEST (see "Accessories" pages)
S type auxiliary contacts for signalisation I-0: as standard operation (see "Accessories" pages)
ST type auxiliary contacts for signalisation I-0-TEST: TEST operation (see "Accessories" pages)
Drive shaft kit for S and ST type auxiliary contacts for signalisation (see "Accessories" pages)
Handle key interlocking accessories (see "Accessories" pages)
Label holder (see "Accessories" pages)

** For fuses: see A.224 "BS88 industrial fuselinks 2 to 1 250 A" page.*
*** For fuse size A4: max Ø 31 mm.*
(1) Top/bottom.
(2) 4 auxiliary contacts as standard, without additional holder, the additional holder is for extra 4 auxiliary contacts.
(3) Standard.

FUSERBLOC
20 to 1250 A

Functions
Illustrations
References BS88
References NFC and DIN
Accessories
Enclosed fuse switches
Characteristics
Dimensions

References

BS88 - External front or right side operation

fuser_554_a

Rating (A) / Fuse size* / Frame size	No. of poles	Switch I-0	CHANGEOVER switch I-0-II	Integrated solid neutral link	Door interlocked external front handle	Door interlocked TEST external front handle	Door interlocked external right-side handle	Door interlocked CHANGEOVER external front handle	Shaft extensions for external handle	Terminal shrouds(1)	Additional contact holder for U type AC
CD 200 / A3-A4** / 13a	2 P	3841 **2019**(2)	-	3829 **9320**	Padlockable I-0 S2 type Black IP55 1421 **2111**(3) Red/Yellow IP65 1424 **2111**	Padlockable I-0-TEST S2 type Black IP65 1423 **2115**(3) Red/Yellow IP65 1424 **2115**	Padlockable I-0 S2 type Black IP55 1425 **2111**(3) Red/Yellow IP65 1428 **2111**	Padlockable I-0-II S2 type Black IP55 1421 **2113**(3) Red/Yellow IP65 1424 **2113**	320 mm 1400 **1032**	2 P 3998 **2016** 3 P 3998 **3016** 4 P 3998 **4016**	3999 **0600**(4)
	3 P	3841 **3019**(2)	3880 **3019**								
	4 P	3841 **6019**(2)	3880 **6019**								
200 / B1-B2 / 15	2 P	3841 **2021**(2)	-	3829 **9325**						2 P 3998 **2025** 3 P 3998 **3025** 4 P 3998 **4025**	3999 **0600**(5)
	3 P	3841 **3021**(2)	3880 **3021**								
	4 P	3841 **6021**(2)	3880 **6021**								
250 / B1-B2-B3 / 15	2 P	3841 **2024**(2)	-								
	3 P	3841 **3024**(2)	3880 **3024**								
	4 P	3841 **6024**(2)	3880 **6024**								
315 / B1-B2-B3 / 16	2 P	3841 **2032**(2)	-	3829 **9339**							
	3 P	3841 **3032**(2)	3880 **3032**								
	4 P	3841 **6032**(2)	3880 **6032**								
400 / B1-B2-B3-B4 / 16	2 P	3841 **2039**(2)	-								
	3 P	3841 **3039**(2)	3880 **3039**								
	4 P	3841 **6039**(2)	3880 **6039**								
630 / C1-C2 / 17	2 P	3821 **2063**	-	3829 **9308**	Padlockable I-0 S3 type Black IP65 1433 **3111**(3) Red/Yellow IP65 1434 **3111**	-	Padlockable I-0 S3 type Black IP55 1437 **3111**(3) Red/Yellow IP65 1438 **3111**	-	320 mm 1400 **1232**	2 P 3998 **2080** 3 P 3998 **3080** 4 P 3998 **4080**	-
	3 P	3821 **3063**	-								
	4 P	3821 **6063**	-								
800 / C1-C2-C3 / 17	2 P	3821 **2080**	-								
	3 P	3821 **3080**	-								
	4 P	3821 **6080**	-								
1250 / D1 / 18	2 P	3821 **2120**	-	3829 **9312**	Padlockable I-0 S4 type Black IP65 1443 **3111**(3)						
	3 P	3821 **3120**	-								
	4 P	3821 **6120**	-								

Auxiliary contacts pre-break and signalisation I-0-TEST (see "Accessories" pages)
S type auxiliary contacts for signalisation I-0: as standard operation (see "Accessories" pages)
ST type auxiliary contacts for signalisation I-0-TEST: TEST operation (see "Accessories" pages)
Drive shaft kit for S and ST type auxiliary contacts for signalisation (see "Accessories" pages)
Handle key interlocking accessories (see "Accessories" pages)
Label holder (see "Accessories" pages)

** For fuses: see A.224 "BS88 industrial fuselinks 2 to 1 250 A" page.*
*** For fuse size A4: max Ø 31 mm.*
(1) Top/bottom. - (2) Position I-0-TEST available for this switch. - (3) Standard. - (4) 4 auxiliary contacts as standard, without additional holder, the additional holder is for extra 4 auxiliary contacts. (5) 8 auxiliary contacts as standard, without additional holder, the additional holder is for extra 8 auxiliary contacts.

This document is not a contract. SOCOMEC reserves the right to modify features without prior notice in view of continued improvement. 2008 - 2009

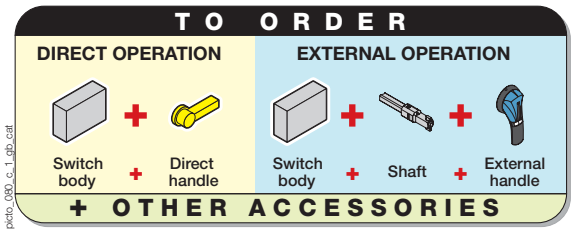

References

BS88 - Direct operation

Rating (A) / Fuse size / Frame size	No. of poles	Direct side operation switch	Direct front operation switch	Direct side handle	Direct front handle	Auxiliary contact pre-break and signalisation 0-I	Terminal shrouds[1]	Cage terminals	Handle key interlocking accessories[2]
20 / A1 / 0	3 P	-	3641 **3000**	-	Black 3629 **4012**	A type 1 AC NO/NC 3999 **0001**[3] 2 AC NO/NC 3999 **0002**[3]	standard	standard	-
	3 P + switch neutral	-	3641 **4000**						
	3 P + solid neutral	-	3641 **5000**						
CD 32 / A1 / 0	3 P	-	3641 **3001**						
	3 P + switch neutral	-	3641 **4001**						
	3 P + solid neutral	-	3641 **5001**						
32 / A1 / 1	2 P	3625 **2003**	consult us	Black 3629 **7900**	consult us	A type 1 AC NO/NC 3999 **0021**[3] 2 AC NO/NC 3999 **0022**[3]			3629 **7903**
	3 P	3625 **3003**	consult us						
	4 P	3625 **6003**	consult us						
63 / A2-A3 / 2	2 P	3625 **2006**	consult us						
	3 P	3625 **3006**	consult us						
	4 P	3625 **6006**	consult us						
100 / A4* / 3	2 P	3625 **2010**	consult us	Black 3629 **7901**			2 P 3998 **2016** 3 P 3998 **3016** 4 P 3998 **4016**	3 P 5400 **3016** 4 P 5400 **4016**	3629 **7913**
	3 P	3625 **3010**	consult us						
	4 P	3625 **6010**	consult us						
CD 160 / A4* / 13 a	2 P	3625 **2014**	consult us						
	3 P	3625 **3014**	consult us						
	4 P	3625 **6014**	consult us						
160 / A4 / 4	2 P	3625 **2015**	consult us						
	3 P	3625 **3015**	consult us						
	4 P	3625 **6015**	consult us						
160 / B1-B2 / 4	2 P	3625 **2016**	consult us						
	3 P	3625 **3016**	consult us						
	4 P	3625 **6016**	consult us						

Label holder (see "Accessories" pages)

** For fuse size A4: max Ø 31 mm.*
(1) Top/bottom.
(2) Locking using RONIS EL11AP lock (lock not included).
(3) Max number of A type auxiliary contacts is 2.

FUSERBLOC
20 to 1250 A

Functions
Illustrations
▶ References BS88
▶ References NFC and DIN
Accessories
Enclosed fuse switches
Characteristics
Dimensions

References

▶ BS88 - Direct operation

fuser 230 a_2_cat

Rating (A) / Fuse size / Frame size	No. of poles	Direct side operation switch	Direct front operation switch	Direct side handle	Direct front handle	Auxiliary contact pre-break and signalisation 0-I	Terminal shrouds[1]	Cage terminals	Handle key interlocking accessories[2]
CD 200 / A4* / 13 a	2 P	3625 **2019**	consult us	Black 3629 **7901**	consult us	A type 1 AC NO/NC 3999 **0021**[3] 2 AC NO/NC 3999 **0022**[3]	2P 3998 **2016** 3P 3998 **3016** 4P 3998 **4016**	3P 5400 **3016** 4P 5400 **4016**	3629 **7913**
	3 P	3625 **3019**	consult us						
	4 P	3625 **6019**	consult us						
200 / B1-B2 / 5	2 P	3625 **2021**	consult us						
	3 P	3625 **3021**	consult us						
	4 P	3625 **6021**	consult us						
250 / B1-B2-B3 / 5	2 P	3625 **2024**	consult us				2P 3998 **2025** 3P 3998 **3025** 4P 3998 **4025**	- 5400 **3025** 5400 **4025**	
	3 P	3625 **3024**	consult us						
	4 P	3625 **6024**	consult us						
315 / B1-B2-B3 / 6	2 P	3625 **2032**	consult us					3P 5400 **3040** 4P 5400 **4040**	
	3 P	3625 **3032**	consult us						
	4 P	3625 **6032**	consult us						
400 / B1-B2-B3-B4 / 6	2 P	3625 **2039**	consult us						
	3 P	3625 **3039**	consult us						
	4 P	3625 **6039**	consult us						

fuser 416 a_1_cat

Rating (A) / Fuse size / Frame size	No. of poles	Direct side and front operation switch	Direct side handle	Direct front handle	Auxiliary contact pre-break and signalisation 0-I	Terminal shrouds[1]
630 / C1-C2 / 17	2 P	3821 **2063**	Black 3899 **7911**[4]	Black 3899 **6011**	U type 1 AC NO 3999 **0701**[5] 1 AC NC 3999 **0702**[5]	2 P 3898 **2080** 3 P 3898 **3080** 4 P 3898 **4080**
	3 P	3821 **3063**				
	4 P	3821 **6063**				
800 / C1-C2-C3 / 17	2 P	3821 **2080**				
	3 P	3821 **3080**				
	4 P	3821 **6080**				
1250 / D1 / 18	2 P	3821 **2120**		Black 3899 **7011**		3898 **2120**
	3 P	3821 **3120**				3898 **3120**
	4 P	3821 **6120**				3898 **4120**

Label holder (see "Accessories" pages)

** For fuse size A4: max Ø 31 mm. - (1) Top/bottom. - (2) Locking using RONIS EL11AP lock (lock not included). - (3) Max number of A type auxiliary contact is 2. - (4) Kit for side direct operation, to be used with external right side handle (see page A.170). - (5) Max number of U type auxiliary contact is 8.*

This document is not a contract. SOCOMEC reserves the right to modify features without prior notice in view of continued improvement. 2008 - 2009

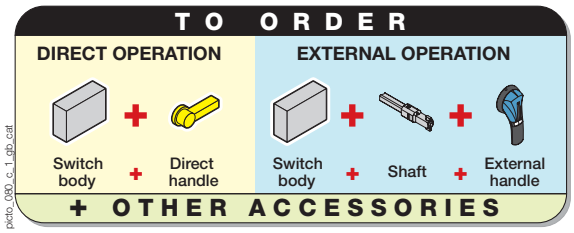

References

NFC and DIN - External front or right side operation

Rating (A) / Fuse size / Frame size	No. of poles	Switch I-0-TEST	CHANGEOVER switch I-0-II	Integrated solid neutral link	Door interlocked external front handle	Door interlocked TEST external front handle	Door interlocked external right-side handle	Door interlocked CHANGEOVER external front handle	Shaft extensions for external handle	Terminal shrouds[1]	Additional contact holder for U type AC[2]
25 / 10x38 / 0	3 P	3631 **3002**	3670 **3002**	-	Padlockable I-0 S1 type Black IP55 1411 **2111** Red/Yellow IP65 1414 **2111**	Padlockable I-0-TEST S1 type Black IP65 1413 **2115** Red/Yellow IP65 1414 **2115**	Padlockable I-0 S1 type Black IP55 1415 **2111** Red/Yellow IP65 1418 **2111**	Padlockable I-0-II S1 type Black IP55 1411 **2113** Red/Yellow IP65 1414 **2113**	320 mm 1401 **0532**	-	3999 **0710**
	3 P + switch neutral	3631 **4002**	3670 **4002**								
	3 P + solid neutral	3631 **5002**	-								
CD 32 / 10x38 / 0	3 P	3631 **3003**	3670 **3003**								
	3 P + switch neutral	3631 **4003**	3670 **4003**								
	3 P + solid neutral	3631 **5003**	-								
32 / 14x51 / 0	3 P	3631 **3004**	3670 **3004**								
	3 P + switch neutral	3631 **4004**	3670 **4004**								
	3 P + solid neutral	3631 **5004**	-								
50 / 14x51 / 11	2 P	3831 **2005**	-		Padlockable I-0 S1 type Black IP65 1413 **2111** Red/Yellow IP65 1414 **2111**	Padlockable I-0-TEST S1 type Black IP55 1411 **2115** Red/Yellow IP65 1414 **2115**			320 mm 1400 **1032**	standard	3999 **0600**
	3 P	3831 **3005**	3870 **3005**								
	4 P	3831 **6005**	3870 **6005**								
63 / 00C / 12	2 P	3831 **2006**	-								
	3 P	3831 **3006**	3870 **3006**								
	4 P	3831 **6006**	3870 **6006**								
100 / 22x58 / 13	2 P	3831 **2010**	-	3829 **9310**	Padlockable I-0 S2 type Black IP65 1423 **2111** Red/Yellow IP65 1424 **2111**	Padlockable I-0-TEST S2 type Black IP55 1421 **2115** Red/Yellow IP65 1424 **2115**	Padlockable I-0 S2 type Black IP55 1425 **2111** Red/Yellow IP65 1428 **2111**	Padlockable I-0-II S2 type Black IP55 1421 **2113** Red/Yellow IP65 1424 **2113**		2 P 3998 **2016** 3 P 3998 **3016** 4 P 3998 **4016**	
	3 P	3831 **3010**	3870 **3010**								
	4 P	3831 **6010**	3870 **6010**								
125 / 22x58 / 13	2 P	3831 **2011**	-								
	3 P	3831 **3011**	3870 **3011**								
	4 P	3831 **6011**	3870 **6011**								

Auxiliary contacts pre-break and signalisation I-0-TEST (see "Accessories" pages)
Auxiliary contacts for fuse blown indication (see "Accessories" pages)
S type auxiliary contacts for signalisation I-0: as standard operation (see "Accessories" pages)
ST type auxiliary contacts for signalisation I-0-TEST: TEST operation (see "Accessories" pages)
Drive shaft kit for S and ST type auxiliary contacts for signalisation (see "Accessories" pages)
Handle key interlocking accessories (see "Accessories" pages)
Label holder (see "Accessories" pages)

(1) Top/bottom.
(2) 4 auxiliary contacts as standard, without additional holder, the additional holder is for extra 4 auxiliary contacts.

FUSERBLOC
20 to 1250 A

Functions
Illustrations
References BS88
▶ References NFC and DIN
Accessories
Enclosed fuse switches
Characteristics
Dimensions

References

▶ NFC and DIN - External front or right side operation

fuser 549 a_2_cat

Rating (A) / Fuse size / Frame size	No. of poles	Switch I-0	CHANGEOVER switch I-0-II	Integrated solid neutral link	Door interlocked external front handle	Door interlocked TEST external front handle	Door interlocked external right-side handle	Door interlocked CHANGEOVER external front handle	Shaft extensions for external handle	Terminal shrouds[1]	Additional contact holder for U type AC
125 / 00 / 13	2 P	3831 **2012**[2]	-	3829 **9310**	Padlockable I-0 S2 type Black IP55 1421 **2111** Red/Yellow IP65 1424 **2111**	Padlockable I-0-TEST S2 type Black IP65 1423 **2115** Red/Yellow IP65 1424 **2115**	Padlockable I-0 S2 type Black IP55 1425 **2111** Red/Yellow IP65 1428 **2111**	Padlockable I-0-II S2 type Black IP55 1421 **2113** Red/Yellow IP65 1424 **2113**	320 mm 1400 **1032**	2 P 3998 **2016** 3 P 3998 **3016** 4 P 3998 **4016**	3999 **0600**[3]
	3 P	3831 **3012**[2]	3870 **3012**								
	4 P	3831 **6012**[2]	3870 **6012**								
160 / 00 / 13	2 P	3831 **2015**[2]	-	3829 **9320**							
	3 P	3831 **3015**[2]	3870 **3015**								
	4 P	3831 **6015**[2]	3870 **6015**								
160 / 0 / 14	2 P	3831 **2016**[2]	-								
	3 P	3831 **3016**[2]	3870 **3016**								
	4 P	3831 **6016**[2]	3870 **6016**								
250 / 1 / 15	2 P	3831 **2024**[2]	-	3829 **9325**						2 P 3998 **2025** 3 P 3998 **3025** 4 P 3998 **4025**	3999 **0600**[4]
	3 P	3831 **3024**[2]	3870 **3024**								
	4 P	3831 **6024**[2]	3870 **6024**								
400 / 2 / 16	2 P	3831 **2039**[2]	-	3829 **9339**							
	3 P	3831 **3039**[2]	3870 **3039**								
	4 P	3831 **6039**[2]	3870 **6039**								
630 / 3 / 17	2 P	3811 **2063**	-	3829 **9308**	Padlockable I-0 S3 type Black IP65 1433 **3111** Red/Yellow IP65 1434 **3111**	-	Padlockable I-0 S3 type Black IP65 1437 **3111** Red/Yellow IP65 1438 **3111**	-	320 mm 1400 **1232**	2 P 3898 **2080** 3 P 3898 **3080** 4 P 3898 **4080**	-
	3 P	3811 **3063**	-								
	4 P	3811 **6063**	-								
800 / 3 / 17	2 P	3811 **2080**	-								
	3 P	3811 **3080**	-								
	4 P	3811 **6080**	-								
800 / 4 / 18	2 P	3811 **2081**	-	3829 **9312**	Padlockable I-0 S4 type Black IP65 1443 **3111** Red/Yellow IP65 1444 **3111**					2 P 3898 **2120** 3 P 3898 **3120** 4 P 3898 **4120**	
	3 P	3811 **3081**	-								
	4 P	3811 **6081**	-								
1250 / 4 / 18	2 P	3811 **2120**	-								
	3 P	3811 **3120**	-								
	4 P	3811 **6120**	-								

Auxiliary contacts pre-break and signalisation I-0-TEST (see "Accessories" pages)
Auxiliary contacts for fuse blown indication (see "Accessories" pages)
S type auxiliary contacts for signalisation I-0: as standard operation (see "Accessories" pages)
ST type auxiliary contacts for signalisation I-0-TEST: TEST operation (see "Accessories" pages)
Drive shaft kit for S and ST type auxiliary contacts for signalisation (see "Accessories" pages)
Handle key interlocking accessories (see "Accessories" pages)

(1) Top/bottom. - (2) Position I-0-TEST available for this switch. - (3) 4 auxiliary contacts as standard, without additional holder, the additional holder is for extra 4 auxiliary contacts. - (4) 8 auxiliary contacts as standard, without additional holder, the additional holder is for extra 8 auxiliary contacts.

This document is not a contract. SOCOMEC reserves the right to modify features without prior notice in view of continued improvement. 2008 - 2009

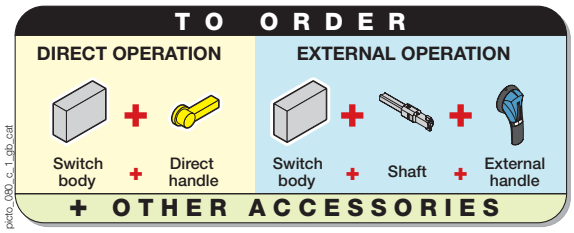

References

NFC and DIN - Direct operation

Rating (A) / Fuse size / Frame size	No. of poles	Direct side operation switch	Direct front operation switch	Direct side handle	Direct front handle	Auxiliary contact pre-break and signalisation 0-I	Terminal shrouds[1]	Cage terminals	Lock for fuse protection cover	Handle key interlocking accessories[2]
25 / 10x38 / 0	3 P	-	3631 **3002**	-	Black 3629 **4012**	A type 1 AC NO/NC 3999 **0001**[3] 2 AC NO/NC 3999 **0002**[3]	standard	standard	standard	-
	3 P + switch neutral	-	3631 **4002**							
	3 P + solid neutral	-	3631 **5002**							
CD 32 / 10x38 / 0	3 P	-	3631 **3003**							
	3 P + switch neutral	-	3631 **4003**							
	3 P + solid neutral	-	3631 **5003**							
32 / 14x51 / 0	3 P	-	3631 **3004**							
	3 P + switch neutral	-	3631 **4004**							
	3 P + solid neutral	-	3631 **5004**							
50 / 14x51 / 1	2 P	3615 **2005**	consult us	Black 3629 **7900**	consult us	A type 1 AC NO/NC 3999 **0021**[3] 2 AC NO/NC 3999 **0022**[3]				3629 **7903**
	3 P	3615 **3005**	consult us							
	4 P	3615 **6005**	consult us							
63 / 00C / 2	2 P	3615 **2006**	consult us						3999 **8906**	
	3 P	3615 **3006**	consult us							
	4 P	3615 **6006**	consult us							
100 / 22x58 / 3	2 P	3615 **2010**	consult us	Black 3629 **7901**			2 P 3998 **2016** 3 P 3998 **3016** 4 P 3998 **4016**	3 P 5400 **3016** 4 P 5400 **4016**	3999 **8912**	3629 **7913**
	3 P	3615 **3010**	consult us							
	4 P	3615 **6010**	consult us							
125 / 22x58 / 3	2 P	3615 **2011**	consult us							
	3 P	3615 **3011**	consult us							
	4 P	3615 **6011**	consult us							
125 / 00 / 3	2 P	3615 **2012**	consult us							
	3 P	3615 **3012**	consult us							
	4 P	3615 **6012**	consult us							

Auxiliary contacts for fuse blown indication (see "Accessories" pages)
Label holder (see "Accessories" pages)

(1) Top/bottom.
(2) Locking using RONIS EL11AP lock (lock not included).
(3) Max number of A type auxiliary contacts is 2.

FUSERBLOC
20 to 1250 A

Functions
Illustrations
References BS88
▶ References NFC and DIN
▶ Accessories
Enclosed fuse switches
Characteristics
Dimensions

References

▶ NFC and DIN - Direct operation

fuser 230 a_2_cat

Rating (A) / Fuse size / Frame size	No. of poles	Direct side operation switch	Direct front operation switch	Direct side handle	Direct front handle	Auxiliary contact pre-break and signalisation 0-I	Terminal shrouds[1]	Cage terminals	Lock for fuse protection cover	Handle key interlocking accessories[2]
160 / 00 / 3	2 P	3615 **2015**	consult us	Black 3629 **7901**	consult us	A type 1 AC NO/NC 3999 **0021**[3] 2 AC NO/NC 3999 **0022**[3]	2 P 3998 **2016** 3 P 3998 **3016** 4 P 3998 **4016**	3 P 5400 **3016** 4 P 5400 **4016**	3999 **8912**	3629 **7913**
	3 P	3615 **3015**	consult us							
	4 P	3615 **6015**	consult us							
160 / 0 / 4	2 P	3615 **2016**	consult us						3999 **8216**	
	3 P	3615 **3016**	consult us						3999 **8316**	
	4 P	3615 **6016**	consult us						3999 **8416**	
250 / 1 / 5	2 P	3615 **2024**	consult us				2 P 3998 **2025** 3 P 3998 **3025** 4 P 3998 **4025**	3 P 5400 **3025** 4 P 5400 **4025**	3999 **8225**	
	3 P	3615 **3024**	consult us						3999 **8325**	
	4 P	3615 **6024**	consult us						3999 **8425**	
400 / 2 / 6	2 P	3615 **2039**	consult us					3 P 5400 **3040** 4 P 5400 **4040**	3999 **8240**	
	3 P	3615 **3039**	consult us						3999 **8340**	
	4 P	3615 **6039**	consult us						3999 **8440**	

fuser 416 a_1_cat

Rating (A) / Fuse size / Frame size	No. of poles	Direct side and front operation switch	Direct side handle	Direct front handle	Auxiliary contact pre-break and signalisation 0-I	Terminal shrouds[1]
630 / 3 / 17	2 P	3811 **2063**	Black 3899 **7911**	Black 3899 **6011**	U type 1 AC NO 3999 **0701**[4] 1 AC NC 3999 **0702**[4]	2 P 3898 **2080** 3 P 3898 **3080** 4 P 3898 **4080**
	3 P	3811 **3063**				
	4 P	3811 **6063**				
800 / 3 / 17	2 P	3811 **2080**				
	3 P	3811 **3080**				
	4 P	3811 **6080**				
800 / 4 / 18	2 P	3811 **2081**		Black 3899 **7011**		2 P 3898 **2120** 3 P 3898 **3120** 4 P 3898 **4120**
	3 P	3811 **3081**				
	4 P	3811 **6081**				
1250 / 4 / 18	2 P	3811 **2120**				
	3 P	3811 **3120**				
	4 P	3811 **6120**				

Auxiliary contacts for fuse blown indication (see "Accessories" pages)
Label holder (see "Accessories" pages)

(1) Top/bottom. - (2) Locking using RONIS EL11AP lock (lock not included). - (3) Max number of A type auxiliary contacts is 2.
(4) Max number of U type auxiliary contacts is 4.

This document is not a contract. SOCOMEC reserves the right to modify features without prior notice in view of continued improvement. 2008 - 2009

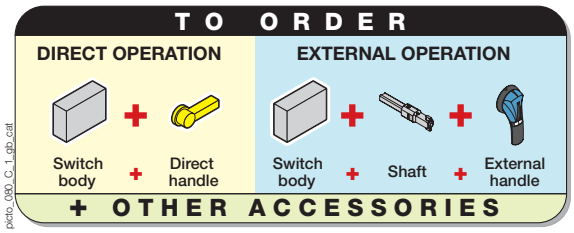

Accessories

Direct handle

acces_147_a_2_cat

Fig. 1

acces_261_a

Fig. 2

acces_262_a

Fig. 3

acces_148_a_2_cat

Fig. 4

fuser_707_a

Fig. 5

References

For front operation

Rating (A)	Frame size	Figure no.	Handle colour	References
20 … 32	0	1	Black	3629 **4012**
20 … 32	0	1	Red	3629 **4013**
32 … 400	11 … 16	2	Black	3629 **7910**
630 … 800	17	2	Black	3899 **6011**
800 … 1250	18	3	Black	3899 **7011**

For right side operation

Rating (A)	Frame size	Figure no.	Handle colour	References
32 … 63	1/2	4	Black	3629 **7900**
100 … 400	3 … 6	4	Black	3629 **7901**
630 … 1250	17 … 18	5	Black	1437 **7911**

Door interlocked external front handle

acces 149 a_2_cat

S1 type handle

acces_164_a_2_cat

S2 type handle

acces 151_a_2_cat

S3 type handle

acces_152_a_2_cat

S4 type handle

References

Padlockable in position 0

Rating (A)	Frame size	Handle type	Handle colour	Operation	External IP	Defeatable handle	References
20 … 63	0/11/12	S1	Black	I - 0	IP55	Yes	1411 **2111**
20 … 63	0/11/12	S1	Black	I - 0	IP65	Yes	1413 **2111**
20 … 63	0/11/12	S1	Red/yellow	I - 0	IP65	Yes	1414 **2111**
20 … 63	0/11/12	S1	Black	I-0-Test	IP65	Yes	1413 **2115**
20 … 63	0/11/12	S1	Red/yellow	I-0-Test	IP65	Yes	1414 **2115**
100 … 400	13…16	S2	Black	I - 0	IP55	Yes	1421 **2111**
100 … 400	13…16	S2	Black	I - 0	IP65	Yes	1423 **2111**
100 … 400	13…16	S2	Red/yellow	I - 0	IP65	Yes	1424 **2111**
100 … 400	13…16	S2	Black	I-0-Test	IP65	Yes	1423 **2115**
100 … 400	13…16	S2	Red/yellow	I-0-Test	IP65	Yes	1424 **2115**
630 … 800	17	S3	Black	I - 0	IP65	Yes	1433 **3111**
630 … 800	17	S3	Red/yellow	I - 0	IP65	Yes	1434 **3111**
800 … 1250	18	S4	Black	I - 0	IP65	Yes	1443 **3111**
800 … 1250	18	S4	Red/yellow	I - 0	IP65	Yes	1444 **3111**

Padlockable in position 0 and I

Rating (A)	Frame size	Handle type	Handle colour	External IP	References
20 … 63	0/11/12	S1	Black	IP65	1413 **2311**
100 … 400	13…16	S2	Black	IP65	1423 **2311**
630 … 800	17	S3	Black	IP65	1433 **3311**
800 … 1250	18	S4	Black	IP65	1443 **3311**

Other versions available, please consult us.

FUSERBLOC
20 to 1250 A

Functions
Illustrations
References BS88
References NFC and DIN
Accessories
Enclosed fuse switches
Characteristics
Dimensions

Accessories

Door interlocked external side handle

acces_149_a_1_cat

S1 type handle

acces_151_a_1_cat

S3 type handle

References

Rating (A)	Frame size	Handle type	Handle colour	External IP	References
20 … 63	0/11/12	S1	Black	IP55	1415 **2111**
20 … 63	0/11/12	S1	Black	IP65	1417 **2111**
20 … 63	0/11/12	S1	Red/yellow	IP65	1418 **2111**
100 … 400	13…16	S2	Black	IP55	1425 **2111**
100 … 400	13…16	S2	Black	IP65	1427 **2111**
100 … 400	13…16	S2	Red/yellow	IP65	1428 **2111**
630 … 1250	17 / 18	S3	Black	IP65	1437 **3111**
630 … 1250	17 / 18	S3	Red/yellow	IP65	1438 **3111**

Door interlocked CHANGEOVER handles external front handle (I - 0 - II)

References

Rating (A)	Frame size	Handle type	Handle colour	External IP	References
20 … 63	0/11/12	S1	Black	IP55	1411 **2113**
20 … 63	0/11/12	S1	Red	IP65	1414 **2113**
100 … 400	13…16	S2	Black	IP55	1421 **2113**
100 … 400	13…16	S2	Red	IP65	1424 **2113**

S type handle adapter

acces 187 a

Use

Enables S type handles to be mounted using old fixing holes for replacement or retrofit applications.

Dimension

Adds 12 mm to the depth.

References

Handle color	External IP	Pack qty	Reference
Black	IP65	10	1493 **0000**

Alternative S type handle cover colours

acces 198 a

Use

For single lever handles, type S1, S2, S3 and double arms handle, type S4.

Other colours: please consult us.

References

Handle colour	Handle type	Pack qty	References
Light grey	S1, S2, S3	50	1401 **0001**
Dark grey	S1, S2, S3	50	1401 **0011**
Light grey	S4	50	1401 **0031**
Dark grey	S4	50	1401 **0041**

Flat mounting kit / withdrawable adaptation

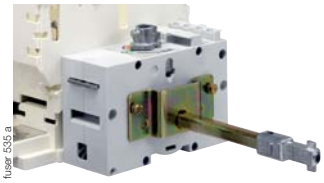

fuser 535 a

Use

The flat mounting providing compact solution ideally suited to withdrawable applications.

References

Rating (A)	Frame size	Type	Reference
20 … 32	0	kit + 200 mm shaft	1429 **7709**
32 … 400	11 … 16	kit + 200 mm shaft	1429 **7710**
32 … 400	11 … 16	kit + 200 mm shaft	1429 **7711**(1)

(1) With 45° twisted shaft.

This document is not a contract. SOCOMEC reserves the right to modify features without prior notice in view of continued improvement. 2008 - 2009

Accessories

Handle for flat mounting kit

fuser 536 a

Padlockable in position 0

References

Rating (A)	Frame size	Handle type	Handle colour	External IP	References
20 … 63	0 / 11 / 12	S1	Black	IP55	1411 **2111**(1)
20 … 63	0 / 11 / 12	S1	Red/yellow	IP65	1414 **2111**(1)
100 … 400	13 ... 16	S2	Black	IP55	1421 **2111**(1)
100 … 400	13 ... 16	S2	Red/yellow	IP65	1424 **2111**(1)

(1) Defeatable handle in position 1.

Shaft extensions for external front handle

acces 145 b_1_cat

acces 143 b_1_cat

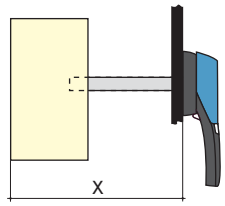

acces 202 a

Use

Standard lengths:
- 200 mm,
- 320 mm,
- 400 mm,
- 500 mm.

Other lengths: please consult us.

References

Rating (A)	Frame size	Shaft length (mm)	References
20 … 32	0	200	1401 **0520**
20 … 32	0	320	1401 **0532**
20 … 32	0	400	1401 **0540**
32 … 400	16	200	1400 **1020**
32 … 400	11 ... 16	320	1400 **1032**
32 … 400	11 ... 16	500	1400 **1050**(1)
630 … 800	17	200	1400 **1220**
630 … 1250	17 / 18	320	1400 **1232**
630 … 1250	17 / 18	500	1400 **1250**

(1) Use "Front operation shaft Support accessory".

Dimension X (mm) for FUSERBLOC *BS88*

Shaft length (mm)	Rating (A)	20 … CD 32	32	63 … 160	CD 160 … CD 200	160 … 200	250 … 400	630 … 800	1250
	Fuse size	A1	A1	A2-A3/A4	A3-A4	B1-B2	B1-B2-B3-B4	C1-C2-C3	D1
	Frame size	0	11	12/13/14	13a	14/15	15/16	17	18
200		102 … 245	100 … 230	125 … 230	150 … 230	135 … 230	160 … 230	270 … 304	-
320		102 … 365	100 … 350	125 … 350	150 … 350	135 … 350	160 … 350	270 … 424	304 … 424
400		102 … 445	100 … 430	125 … 430	150 … 430	135 … 430	160 … 430	270 … 504	304 … 504
500		-	100 … 530	125 … 530	150 … 530	135 … 530	160 … 530	270 … 604	304 … 604

Dimension X (mm) for FUSERBLOC *NFC and DIN*

Shaft length (mm)	Rating (A)	25 … 32	50	63	100 … 160	160	250 … 400	630 … 800	800 … 1250
	Fuse size	10x38/14x51	14x51	00C	22x58/00	0	1 / 2	3	4
	Frame size	0	11	12	13	14	15 / 16	17	18
200		102 … 245	100 … 230	125 … 230	135 … 230	145 … 230	160 … 230	270 … 304	-
320		102 … 365	100 … 350	125 … 350	135 … 350	145 … 350	160 … 350	270 … 424	304 … 424
400		102 … 445	100 … 430	125 … 430	135 … 430	145 … 430	160 … 430	270 … 504	304 … 504
500		-	100 … 530	125 … 530	135 … 530	145 … 530	160 … 530	270 … 604	304 … 604

FUSERBLOC
20 to 1250 A

Functions
Illustrations
References BS88
References NFC and DIN
Accessories
Enclosed fuse switches
Characteristics
Dimensions

Accessories

Front operation shaft support accessory

fuser 698 a

Use
This support maintains shaft position for extension shafts greater than 320 mm in length.

References

Rating (A)	Frame size	Reference
32 … 400	11 … 16	3899 **0400**

Shaft extensions for external side handle

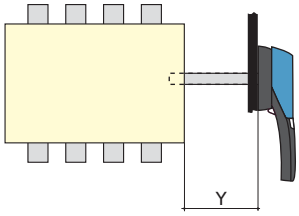

acces 203 a

Use
Standard lengths: 200 mm.

References

Rating (A)	Frame size	Dimension Y (mm)	Shaft length (mm)	References
20 … 32	0	36 … 159	200	1401 **0520**
32 … 400	11 ... 16	36 … 172	200	1400 **1032**
630 … 1250	17 / 18	15 … 150	200	1400 **1220**

Shaft guide for external operation

acces_260_a_2_cat

Use
To guide the shaft extension in the external handle.
This accessory enables handle to engage extension shaft with a misalignment of up to 15 mm.
Required for a shaft lenght over 320 mm.

References

Rating (A)	Reference
20 … 1250	1429 **0000**

Integrated solid neutral link

acces 130 a_1_cat

acces 131 a_1_cat

Use
Separately mounted disconnectable neutral blocks available see “Mounting and cabling accessories” page C.62.

References

BS88 *switches with external front operation*

Rating (A)	Frame size	Bar rating (A)	References
100	13	125	3829 **9310**
CD 160 … CD 200	13a	200	3829 **9320**
160	14	200	3829 **9320**
200 … 250	15	250	3829 **9325**
315 … 400	16	400	3829 **9339**
630 … 800	17	800	3829 **9308**
1250	18	1250	3829 **9312**

NFC and DIN *switches with external front operation*

Rating (A)	Frame size	Bar rating (A)	References
100 … 125	13	125	3829 **9310**
160	13	160	3829 **9320**
160	14	200	3829 **9320**
250	15	250	3829 **9325**
400	16	400	3829 **9339**
630 … 800	17	800	3829 **9308**
800 … 1250	18	1250	3829 **9312**

This document is not a contract. SOCOMEC reserves the right to modify features without prior notice in view of continued improvement. 2008 - 2009

Accessories

Solid neutral module

acces 199 a

Use

Unswitched fourth pole with neutral link and fuse cover.

References

BS88 *switches with external front operation*

Rating (A)	Frame size	I_{max} (A)	Distance between centre (mm)	References
32	11	32	27	3629 **9227**
63	12	63	32	3629 **9232**
100	13	100	36	3629 **9236**
CD 160 … CD 200	13a	200	36	3629 **9237**
160	14	160	50	3629 **9250**
200 … 250	15	250	60	3629 **9260**
315 … 400	16	400	66	3629 **9266**
630 … 800	17	800	94	3629 **9294**
1250	18	1250	120	3629 **9212**

NFC and DIN *switches with external front operation*

Rating (A)	Frame size	I_{max} (A)	Distance between centre (mm)	References
50	11	50	27	3629 **9227**
63	12	63	32	3629 **9232**
100 … 160	13	160	36	3629 **9236**
160	14	160	50	3629 **9250**
250	15	250	60	3629 **9260**
400	16	400	66	3629 **9266**
630 … 800	17	800	94	3629 **9294**
800 … 1250	18	1250	120	3629 **9212**

Solid links

fusib 123_a_2_cat

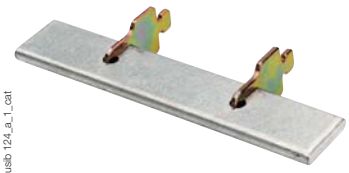

fusib 124_a_1_cat

References

BS88 *switches*

Rating (A)	Frame size	Fuse size	I_{max}(A)	References
32	11	A1	32	3629 **9003**
63	12	A2-A3	63	3629 **9006**
100	13	A4	160	3629 **9010**
CD 160	13a	A3-A4	160	3629 **9010**
160	14	A4	160	3629 **9010**
160	14	B1-B2	200	3629 **9016**
CD 200	13a	A3-A4	160	3629 **9010**
200	15	B1-B2	200	3629 **9016**
250	15	B1-B2-B3	315	3629 **9025**
315	16	B1-B2-B3	315	3629 **9025**
400	16	B1-B2-B3-B4	400	3629 **9040**
630 … 800	17	C1-C3	800	3629 **9063**
1250	18	D1	1250	3629 **9120**

NFC and DIN *switches*

Rating (A)	Frame size	Fuse size	I_{max}(A)	References
50	11	14 x 51	50	6029 **0000**
63	12	00C	160	6420 **0000**
100 … 125	13	22 x 58	125	6039 **0000**
125 … 160	13	00	160	6420 **0000**
160	14	0	160	6421 **0000**
250	15	1	250	6421 **0001**
400	16	2	400	6421 **0002**
630 … 800	17	3	630	6421 **0003**
800 … 1250	18	4	1250	6441 **0005**

FUSERBLOC
20 to 1250 A

Functions
Illustrations
References BS88
References NFC and DIN
Accessories
Enclosed fuse switches
Characteristics
Dimensions

Accessories

U type auxiliary contacts(1)

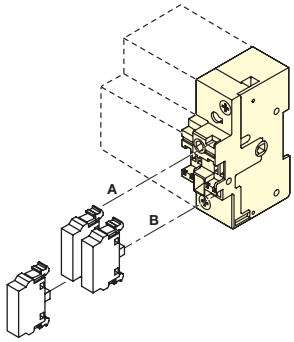

acces_043_a_1_x_cat

acces_056_a_1_cat

Use

Compact universal type auxiliaries can be configured to be operated on both, standard and TEST position switches from 20 to 1250 A.

Auxiliaries can operate in ON only, TEST only or ON+TEST positions with pre-break indication.

Connection to the control circuit

By terminals with max. section 2 x 2.5 mm².

- For FUSERBLOC 20 to 32 A:
  - pre-break and position 0 and I signalling,
  - position 0 and I signalling,
  - position 0 and I and TEST signalling,
  - TEST position signalling.
- For FUSERBLOC 32 to 400 A, pre-break.

A and B in above diagram:
  - position 0 and I signalling,
  - position 0 and I and TEST signalling,
  - TEST position signalling.
- For FUSERBLOC 630 and 1250 A pre-break and position 0 and I signalling.

References

NO auxiliary contacts

Rating (A)	Frame size	Contact(s)	Reference
20 … 1250	0 ... 18	1	3999 **0701**

NC auxiliary contacts

Rating (A)	Frame size	Contact(s)	Reference
20 … 1250	0 ... 18	1	3999 **0702**

Contact holder for auxiliary contacts

Rating (A)	Frame size	Contact(s)	References
20 … CD 200	0 ... 14	4 (2 x 2 high max)	standard(2)
200 … 400	15 / 16	8 (4 x 2 high max)	standard(2)
630 … 1250	17 / 18	8 (4 x 2 high max)	standard(2)

Contact holder for additional auxiliary contacts

Rating (A)	Frame size	Contact(s)	References
20 … 32	0	4 (2 x 2 high max)	3999 **0710**
32 … 400	11 ... 16	4 (2 x 2 high max)	3999 **0600**

Characteristics

Rating (A)	Contact type	Operating current I_e (A) AC-15 250 VAC	AC-15 400 VAC	DC-13 24 VDC	DC-13 48 VDC
20 … 1250	NC/NO	3	1.8	2.8	1.4

(1) U type auxiliary contacts cannot be mounted conjunction with integrated solid neutral.
(2) External operation only.

This document is not a contract. SOCOMEC reserves the right to modify features without prior notice in view of continued improvement. 2008 - 2009

Accessories

A type auxiliary contacts

acces_046_a_1_cat

acces_047_a_2_cat

Use

Pre-break and position 0 and I signalling by 1 or 2 NO/NC auxiliary contacts.

For low level use, specific auxiliary contacts: please consult us.

Connection to the control circuit

By fast-on terminal 6.35 mm.

Electrical characteristics

30 000 operations.

References

NO/NC auxiliary contacts

Rating (A)	Frame size	Contact(s)	References
20 … 32	0	1	3999 **0001**
20 … 32	0	2	3999 **0002**(2)
32 … 400(1)	1 ... 6	1	3999 **0021**(2)
32 … 400(1)	1 ... 6	2	3999 **0022**(2)

(1) Side direct operation switch only.
(2) A type auxiliary contacts cannot be mounted on a solid neutral device. Only one auxiliary contact on direct left operation.

Characteristics

Rating (A)	Contact type	Nominal current (A)	Operating current I_e (A) AC-13 250 VAC	AC-13 400 VAC	DC-13 24 VDC	DC-13 48 VDC
20 … 400	NO/NC	16	4	2	12	2

S and ST type auxiliary contacts(1)

acces_051_a_2_cat

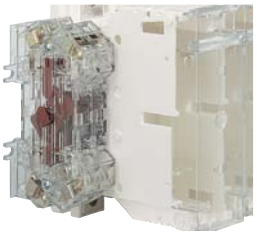

acces_083_a_1_cat

Use

Auxiliary contacts operated by a drive shaft driven from the main switch contacts.

For FUSERBLOCs 32 to 1250 A, position 0 and I signalling by 1 to 4 NO + NC auxiliary contacts.

Electrical principle

The NO + NC S type auxiliary contacts can be configured as 2 NC or 2 NO.

Connection

By terminals with max. section 10 mm².

Characteristics

30 000 operations.

References

S type auxiliary contacts I-0 for external front and right-side operation (Standard operation)

Rating (A)	Frame size	Contact type	Reference
32 … 1250	11 … 18	1 NO + 1 NC	3999 **0040**

ST type auxiliary contacts I-0-TEST for external front and right-side operation (TEST operation)

Rating (A)	Frame size	Contact type	Description	References
32 … 400	11 … 16	1 NO + 1 NC	TEST + ON	3999 **0141**
32 … 400	11 … 16	2 NO	TEST + ON	3999 **0241**

Drive shaft kit for auxiliary contacts for signalisation

AC type	Operation type	References
S type	Standard	3999 **0003**
ST type	TEST	3999 **0103**

Characteristics

Rating (A)	Contact type	Nominal current (A)	Operating current I_e (A) AC-13 250 VAC	AC-13 400 VAC
32 … 1250	NC + NO	20	10	8

(1) Not suitable for frame size 13a.

FUSERBLOC
20 to 1250 A

Functions
Illustrations
References BS88
References NFC and DIN
Accessories
Enclosed fuse switches
Characteristics
Dimensions

Accessories

NFC and DIN fuse blown indication

fuser_311_a_1_cat

fuser_312_a_1_cat

Use
For fuse cartridge with striker (size 14 x 51 ; 22 x 58 ; 0 ; 1, 2, 3 and 4).

Electrical principle
A NO/NC auxiliary contacts detects that the fuse has blown.

Connection to the control circuit
By fast-on terminal 6.35 mm.

Electrical characteristics
30 000 operations.

References

NO/NC type auxiliary contacts for 2 pole

Rating (A)	Frame size	Fuse size	Contact(s)	References
50	11	14 x 51	1st	3994 **0405**
100 … 125	13	22 x 58	1st	3994 **0210**
160	14	0	1st	3994 **0216**
250 … 400	15 / 16	1-2	1st	3994 **0225**
630	17	3	1st	3894 **1206**
800 … 1250	18	4	1st	3894 **1212**

NO/NC type auxiliary contacts for 3 pole

Rating (A)	Frame size	Fuse size	Contact(s)	References
32	0	14 x 51	1st	3994 **0303**
50	11	14 x 51	1st	3994 **0405**
100 … 125	13	22 x 58	1st	3994 **0310**
160	14	0	1st	3994 **0316**
250 … 400	15 / 16	1-2	1st	3994 **0325**
630	17	3	1st	3894 **1306**
800 … 1250	18	4	1st	3894 **1312**
50 … 1250	11 … 18		2nd	3994 **1901**

NO/NC type auxiliary contacts for 3 pole or 3 pole + neutral

Rating (A)	Frame size	Fuse size	Contact(s)	References
50	11	14 x 51	1st	3994 **0405**
100 … 125	13	22 x 58	1st	3994 **0410**
160	14	0	1st	3994 **0416**
250 … 400	15 / 16	1-2	1st	3994 **0425**
630	17	3	1st	3894 **1406**
800 … 1250	18	4	1st	3894 **1412**
50 … 1250	11 … 18		2nd	3994 **1901**

Characteristics

Rating (A)	Contact type	Nominal current (A)	Operating current I_e (A) AC-13 250 VAC	AC-13 400 VAC	DC-13 24 VDC	DC-13 48 VDC
32 … 1250	NO/NC	16	4	3	12	2

This document is not a contract. SOCOMEC reserves the right to modify features without prior notice in view of continued improvement. 2008 - 2009

Accessories

Fuse cover interlocking

Use

On ***NFC and DIN***, side direct operation, locking of the opening of the fuse protection cover when FUSERBLOC is engaged (position I).

References

Rating (A)	Frame size	Fuse size	No. of poles	References
25 … 50	0 ... 11	10 x 38/14 x 51	2/3/4 P	standard
63	12	00C	2/3/4 P	3999 **8906**
100 … 125	13	22 x 58	2/3/4 P	3999 **8912**
125 … 160	13	00	2/3/4 P	3999 **8912**
160	14	0	2 P	3999 **8216**
160	14	0	3 P	3999 **8316**
160	14	0	4 P	3999 **8416**
250	15	1	2 P	3999 **8225**
250	15	1	3 P	3999 **8325**
250	15	1	4 P	3999 **8425**
400	16	2	2 P	3999 **8240**
400	16	2	3 P	3999 **8340**
400	16	2	4 P	3999 **8440**

Terminal shrouds

Use

Top or bottom protection against direct contact with the terminals or connection parts.

2 sets required to fully shroud both incoming and outgoing terminals.

Advantage

Perforations allowing thermographic inspection without dismantling.

References

Rating (A)	Frame size	Position	No. of poles	References
20 … 63	0 … 12	top/bottom	2/3/4 P	standard
100 … CD 200	13/14	top/bottom	2 P	3998 **2016**
100 … CD 200	13/14	top/bottom	3 P	3998 **3016**
100 … CD 200	13/14	top/bottom	4 P	3998 **4016**
200 … 400	15/16	top/bottom	2 P	3998 **2025**
200 … 400	15/16	top/bottom	3 P	3998 **3025**
200 … 400	15/16	top/bottom	4 P	3998 **4025**
630 … 800	17	top/bottom	2 P	3898 **2080**
630 … 800	17	top/bottom	3 P	3898 **3080**
630 … 800	17	top/bottom	4 P	3898 **4080**
800 … 1250	18	top/bottom	2 P	3898 **2120**
800 … 1250	18	top/bottom	3 P	3898 **3120**
800 … 1250	18	top/bottom	4 P	3898 **4120**

FUSERBLOC
20 to 1250 A

Functions
Illustrations
References BS88
References NFC and DIN
Accessories
Enclosed fuse switches
Characteristics
Dimensions

Accessories

Cage terminals

acces_053_a_1_cat

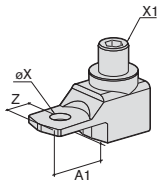

acces_091_a_1_x_cat

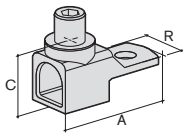

acces_092_a_1_x_cat

Use

Connection of bare copper cables to the terminals (without lugs).

References

Max. rating (A)	Frame size	No. of poles	References
20 … 63	0 ... 12	2/3/4 P	standard
100 … 160	13 / 14	3 P	5400 **3016**
100 … 160	13 / 14	4 P	5400 **4016**
200 … 250	15	3 P	5400 **3025**
200 … 250	15	4 P	5400 **4025**
315 … 400	16	3 P	5400 **3040**
315 … 400	16	4 P	5400 **4040**

Connections

Rating (A)	Section flexible cable (mm²)	Section rigid cable (mm²)	Width flexible bar (mm)	Stripped over (mm)
100 … 160	16 … 95	16 … 95	13	22
200 … 250	16 … 185	16 … 185	18	27
315 … 400	50 … 240	50 … 300	20	34

Dimensions

Rating (A)	A	A1	C	R	ØX	X1	Z
100 … 160	47.5	22.5	25	20	8.5	M12	10
200 … 250	62	31.5	31.5	25	10.5	M16	14
315 … 400	71.5	32	38	32	10.5	M20	15

Label holder

acces_044_a_1_cat

Use

Recognisable self-adhesive label allowing identification of the devices.

Reference

Dimensions L x H (mm)	Pack qty	Reference
18 x 13	50	7769 **9999**

This document is not a contract. SOCOMEC reserves the right to modify features without prior notice in view of continued improvement. 2008 - 2009

Accessories

Handle key interlocking accessories

acces_042_a_1_x_cat

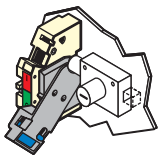

Fig. 1

acces_158_a_1_x_cat

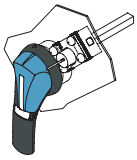

Fig. 2

acces_157_a_1_x_cat

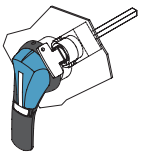

Fig. 3

Use

Locking in position 0 of the direct, front or right side operation:

- using padlock (not supplied) in direct operation:
  - integrated into the handle of 20 to 400 A,
  - integrated into the frame of 630 to 1250 A.
- using padlock (not supplied) in external operation, integrated into the handle of 20 to 1250 A.

Padlocking in external front operation locks the door, with a lock (not included) in external operation.

References

Locking using RONIS EL 11 AP lock (not included)

Rating (A)	Frame size	Operation	Figure no.	References
20 … 1250	0 ... 18	external front	2	1499 **7701**
32 … 63	11 / 12	direct	1	3629 **7903**
100 … 400	13 ... 16	direct	1	3629 **7913**

Locking using CASTELL K lock (not included)

Rating (A)	Frame size	Operation	Figure no.	Reference
20 … 1250	0 ... 18	external front	3	1499 **7702**

Locking using CASTELL FS lock (not included)

Rating (A)	Frame size	Operation	Figure no.	Reference
20 … 1250	0 ... 18	external front	3	1499 **7703**

Locking using XOP lock (not included)

Rating (A)	Frame size	Operation	Reference
20 … 1250	0 ... 18	external front	1499 **7702**

Enclosed fuse switches

Steel enclosure for front operation

coff_295_a_1_cat

General characteristics

- Adapted to mechanical risk and dust hazard.
- S-type black handle lockable in position 0.
- Protection degree: IP55 / Ik 10 (IP65 on request).
- Colour: polyester powder RAL 7035.
- Gland plates: bottom (rating ≤ 63 A), top and bottom (rating > 100 A).
- Material: XC steel, thickness 1.5 or 2 mm.
- Coating: polyester powder.
- Wall mounting: 4 holes in the back of the casing.
- Door: solid with hinges.
- Locking system: 3 mm double-bar key (key supplied).
- Miscellaneous: 2 earth connection points, disconnectable solid neutral link for 3+N, extension boxes for top and/or bottom connections available, IP20 incoming terminal shrouds.
  Fuses not supplied.

Please consult us.

FUSERBLOC
20 to 1250 A

Functions
Illustrations
References BS88
References NFC and DIN
Accessories
Enclosed fuse switches
Characteristics
Dimensions

Enclosed fuse switches

Polyester enclosure for front operation

Functions
- Emergency breaking.
- Protection against overcurrents.
- Breaking for mechanical maintenance.
- Safety isolation in the vicinity of any low voltage final circuit.

Conformity to standards
- IEC 60364
- EN 60204-1
- EN 60439
- EN 60695-2-11

General characteristics
- Adapted to chemical attack, dust hazard, contamination hazard and atmospheric corrosion.
- S-type black handle lockable in position 0.
- Protection degree: IP55 / Ik 10.
- Colour: RAL 7030.
- Gland plates: none.
- Material: glass fibre reinforced polyester.
- Coating: none.
- Wall mounting: 4 fixing lugs supplied, not mounted.
- Locking system: screws.
- Miscellaneous: high comparative tracking index, high resistance to chemicals, self-extinguishing at 960°C, 2 earth connection points, connection on top switch via a set of descending bars. Fuses not supplied.

Connection

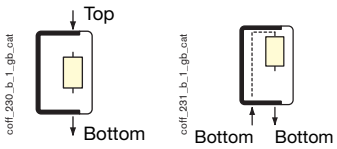

References

Rating (A)	Fuses type: NFC and DIN(1)	References	References
3 x 50	14 x 51	3117 **3005**	3117 **3005**
4 x 50	14 x 51	3117 **4005**	3117 **4005**
3 x 100	22 x 58	3117 **3010**	3127 **3010**
4 x 100	22 x 58	3117 **4010**	3127 **4010**
3 x 160	0	3117 **3016**	3127 **3016**
4 x 160	0	3117 **4016**	3127 **4016**
3 x 250	1	3117 **3025**	3127 **3025**
4 x 250	1	3117 **4025**	3127 **4025**
3 x 400	2	3117 **3040**	3127 **3040**
4 x 400	2	3117 **4040**	3127 **4040**

(1) For BS88 fuses type: please consult us.

Connection

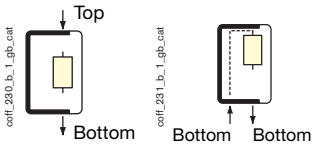

Dimensions

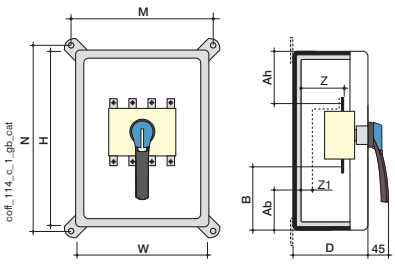

Rating (A)	H x W x D (mm)	Max. connection section (mm^2)	M	N	Z	Z1	Ah	B	Weight (kg)	Ab	B	Weight (kg)
3 x 50 / 4 x 50	270 x 270 x 171	25	271	271	24	-	86	86	*	90	90	3
3 x 100 / 4 x 100	360 x 270 x 171	95	271	361	20	-	108	107	4	-	-	*
3 x 100 / 4 x 100	540 x 270 x 201	95	*	*	*	*	*	*	*	*	*	*
3 x 160	540 x 270 x 171	95	271	541	20	-	220	180	6	-	-	*
3 x 160	540 x 270 x 201	95	271	541	60	25	-	-	*	220	320	8
4 x 160	540 x 360 x 171	95	361	541	20	-	220	180	7	-	-	*
4 x 160	540 x 360 x 201	95	361	541	60	25	-	-	*	220	320	10
3 x 250 / 4 x 250					*							
3 x 400 / 4 x 400					*							

** Please consult us.*

This document is not a contract. SOCOMEC reserves the right to modify features without prior notice in view of continued improvement. 2008 - 2009

Enclosed fuse switches

Polyester enclosure for right side operation

Functions
- Emergency breaking.
- Protection against overcurrents.
- Breaking for mechanical maintenance.
- Safety isolation in the vicinity of any low voltage final circuit.

Conformity to standards
- IEC 60364
- EN 60204-1
- EN 60439
- EN 60695-2-11

General characteristics
- Adapted to chemical attack, dust hazard, contamination hazard and atmospheric corrosion.
- S-type black handle lockable in position 0.
- Protection degree: IP55 / Ik 10.
- Colour: RAL 7030.
- Gland plates: none.
- Material: glass fibre reinforced polyester.
- Coating: none.
- Wall mounting: 4 fixing lugs supplied, not mounted.
- Locking system: screws.
- Miscellaneous: high comparative tracking index, high resistance to chemicals, self-extinguishing at 960°C, 2 earth connection points, connection on top switch via a set of descending bars. Fuses not supplied.

Connection

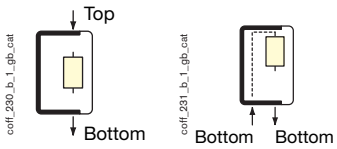

References

Rating (A)	Fuses type: NFC and DIN(1)	References	References
3 x 50	14 x 51	3167 **3005**	3167 **3005**
4 x 50	14 x 51	3167 **4005**	3167 **4005**
3 x 100	22 x 58	3167 **3010**	3167 **3010**
4 x 100	22 x 58	3167 **4010**	3167 **4010**
3 x 160	0	3167 **3016**	3177 **3016**
4 x 160	0	3167 **4016**	3177 **4016**
3 x 250	1	3167 **3025**	3177 **3025**
4 x 250	1	3167 **4025**	3177 **4025**
3 x 400	2	3167 **3040**	3177 **3040**
4 x 400	2	3167 **4040**	3177 **4040**

(1) For BS88 fuses type: please consult us.

Connection

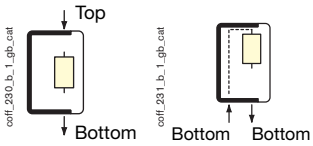

Dimensions

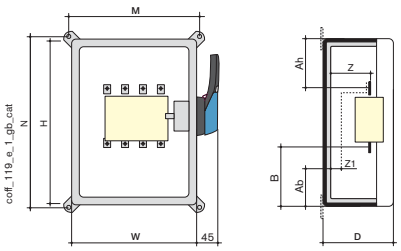

Rating (A)	H x W x D (mm)	Max. connection section (mm^2)	M	N	Z	Z1	Ah	B	Weight (kg)	Ab	B	Weight (kg)
3 x 50 / 4 x 50	270 x 270 x 171	25	271	271	24	-	84	88	4	84	88	4
3 x 100 / 4 x 100	360 x 270 x 171	95	271	361	20	-	108	108	5	108	108	5
3 x 160	540 x 270 x 171	95	271	541	-	-	260	140	6	-	-	*
4 x 160	540 x 360 x 171	95	361	541	20	-	260	140	7	-	-	*
3 x 160 / 4 x 160	540 x 360 x 201	95	361	541	52	24	-	-	-	200	289	8
3 x 250	720 x 360 x 201	240	361	721	20	-	328	228	15	-	-	*
4 x 250	720 x 360 x 201	240	361	721	20	-	338	218	-	-	-	*
3 x 250 / 4 x 250	720 x 360 x 201	240	361	721	51	29	-	-	-	255	453	18
3 x 400 / 4 x 400	720 x 540 x 201	240	541	721	25	-	323	223	18	-	-	*
3 x 400	720 x 540 x 201	240	541	721	25	40	-	-	-	450	403	23
4 x 400	754 x 750 x 312	240	801	618	25	40	-	-	-	436	484	*

** Please consult us.*

FUSERBLOC
20 to 1250 A

Functions
Illustrations
References BS88
References NFC and DIN
Accessories
Enclosed fuse switches
Characteristics
Dimensions

Characteristics (according to IEC 60947-3)

Thermal current I_{th} (40 °C)		20 A	25 A	CD 32 A	CD 32 A	32 A	50 A	63 A	100 A
BS88/DIN fuse size		A1/-	-/10 x 38	-/10 x 38	A1/14 x 51	A1/-	-/14 x 51	A2-A3/00C	A4*/22 x 58
Frame size for direct operation		0	0	0	0	1	1	2	3
Frame size for front and side operation		0	0	0	0	11	11	12	13
Rated insulation voltage U_i (V)		800	800	800	800	750	750	750	750
Rated impulse withstand voltage U_{imp} (kV)		8	8	8	8	8	8	8	8
Rated operational currents I_e (A)									
Rated voltage	Load duty category	A/B(1)	A/B(1)	A/B(1)	A/B(1)	A/B(1)	A/B(1)	A/B(1)	A/B(1)
400 VAC	AC-22 A/AC-22 B	20/20	25/25	32/32	32/32	32/32	50/50	63/63	100/100
	AC-23 A/AC-23 B	20/20	25/25	32/32	32/32	32/32	50/50	63/63	100/100
690 VAC	AC-22 A/AC-22 B	20/20	25/25	32/32	32/32	32/32	50/50	63/63	100(4)/100(4)
	AC-23 A/AC-23 B	20/20	25/25	32/32	32/32	32/32	50/50	63/63	100(4)/100(4)
220 VDC	DC-22 A/DC-22 B	-	-/-	-/32	-/-	32/32	50/50	63/63	100/100
	DC-23 A/DC-23 B	-	-/25(2)	-/-	-/-	32/32	40/40	40/40	100/100
440 VDC	DC-22 A/DC-22 B	-	-/-	-/-	-/-	32(3)/32(3)	50(3)/50(3)	63(3)/63(3)	100(3)/100(3)
	DC-23 A/DC-23 B	-	-/-	-/-	-/-	32(3)/32(3)	40(3)/40(3)	40(3)/40(3)	100(3)/100(3)
Operational power in AC-23 (kW)(1)(5)									
At 400 VAC without pre-break AC		9/9	11/11	15/15	15/15	15/15	25/25	30/30	51/51
At 690 VAC without pre-break AC		15/15	22/22	25/25	25/25	25/25	45/45	55/55	90/90
Reactive power (kvar)(5)									
At 400 VAC		8	11	15	15	15	23	28	45
Fuse protected short-circuit characteristics BS88/DIN(6)									
Prospective short-circuit current (kA rms)		80/-	-/100	-/100	80/100	80/100	-/100	80/100	80/100
Associated fuse rating (A)		20/-	-/25	-/32	32/32	32/32	-/50	63/63	100/100
Short-circuit capacity(6)(7)									
Fuse switch cut-off current (kA peak)		5.5	5.5	5.5	5.5	9	7.6	10.6	20
Fuse selection (maximum fuse size)(7)									
SOCOMEC BS88	Standard max	6A10 0020	6012 0025	6012 0032	6A10 0032	6A10 0032	-	6A30 0063	6A40 0100
	Motor max	6A1M 0032	6013 0025	6013 0032	6A1M 0063	6A1M 0032	-	6A3M 0080	6A4M 0125
SOCOMEC DIN	Distribution (gl - gG)	-	-	-	-	-	6022 0050	6600 0063	6032 0100
	Motor (aM)	-	-	-	-	-	6023 0050	6601 0063	6033 0100
BUSSMANN	Standard max	NITD 20	-	-	NITD 32	NITD 32	-	BAO 63	CEO 100
	Motor max	NITD 20M32	-	-	NITD 32M63	NITD 32M63	-	BAO 63M80	CEO 100M125
LAWSON	Standard max	NIT 20	-	-	NIT 32	NIT 32	-	TIS 63	TCP 100
	Motor max	NIT 20M32	-	-	-	NIT 20M32	-	TIS 63M80	CTFP 100M125
GE	Standard max	NIT 20	-	-	NET 32	NET 32	-	TIS 63	TCP 100
	Motor max	NIT 20M32	-	-	NET 32M63	NET 32M63	-	TIS 63M80	OCP 100M125
Connection									
Minimum Cu cable section (mm²)		2.5	2.5	2.5	2.5	6	6	10	25
Maximum Cu cable section (mm²)		16	16	16	16	25	25	25	95
Maximum busbar width (mm)		-	-	-	-	-	-	-	20
Min. / Max. tightening torque (Nm)		2/-	2/-	2/3	2/3	2.5/3	2.5/3	2.5/3	8.3/13
Mechanical characteristics									
Endurance (number of operating cycles)		20000	20000	20000	20000	10000	10000	10000	10000
Weight of 3 P switch (kg)		0.48	0.48	0.48	0.50	0.80	0.8	1	1.5
Weight of 4 P switch (kg)		0.50	0.50	0.50	0.52	1	1	1.30	2
Weight of 1 P extra (kg)		-	-	-	-	0.2	0.2	0.3	0.5
Frame pitch (mm)		-	-	-	-	32	27	32	36

** For fuse size A4: max Ø 31 mm.*
(1) A/B : Category with index A = frequent operation
Category with index B = infrequent operation.
(2) 3-pole device with 2 pole in series for the + and 1 pole for the -.
(3) 4-pole device with 2 pole in series, by polarity.
(4) With terminal shrouds or terminal screen.
(5) The power value is given for information only, the current values vary from one manufacturer to another.
(6) For a rated operating voltage U_e = 400 VAC.
(7) Please ensure that the cut-off current of the fuse links does not exceed the value given for the fuse switch.

This document is not a contract. SOCOMEC reserves the right to modify features without prior notice in view of continued improvement. 2008 - 2009

Characteristics (according to IEC 60947-3)

Thermal current I_{th} (40 °C)		125 A	125 A	160 A	CD 160 A	160 A	160 A	CD 200 A	200 A
BS88/DIN fuse size		-/22 x 58	-/00	-/00	A3-A4*/-	A4/0	B1-B2/-	A3-A4*/-	B1-B2/-
Frame size for direct operation		3	3	3	-	4	4	-	5
Frame size for front and side operation		13	13	13	13a	14	14	13a	15
Rated insulation voltage U_i (V)		750	750	750	750	750	750	800	750
Rated impulse withstand voltage U_{imp} (kV)		8	8	8	8	8	8	8	8
Rated operational currents I_e (A)									
Rated voltage	Load duty category	A/B(1)	A/B(1)	A/B(1)	A/B(1)	A/B(1)	A/B(1)	A/B(1)	A/B(1)
400 VAC	AC-22 A/AC-22 B	125/125	125/125	160/160	160/160	160/160	160/160	200/200	200/200
	AC-23 A/AC-23 B	125/125	125/125	160/160	160/160	160/160	160/160	200/200	200/200
690 VAC	AC-22 A/AC-22 B	125(2)/125(2)	125(2)/125(2)	160(2)/160(2)	160(2)/160(2)	160(2)/160(2)	160(2)/160(2)	160(2)/160(2)	200(2)/200(2)
	AC-23 A/AC-23 B	100(2)/100(2)	100(2)/100(2)	125(2)/125(2)	125(2)/125(2)	125(2)/125(2)	125(2)/125(2)	125(2)/125(2)	200(2)/160(2)
220 VDC	DC-22 A/DC-22 B	125/125	125/125	160/160	160/160	160/160	160/160	160/160	200/200
	DC-23 A/DC-23 B	100/100	100/100	125/125	125/125	125/125	125/125	125/125	200/200
440 VDC	DC-22 A/DC-22 B	125(3)/125(3)	125(3)/125(3)	160(3)/160(3)	160(3)/160(3)	160(3)/160(3)	160(3)/160(3)	160(3)/160(3)	200(3)/200(3)
	DC-23 A/DC-23 B	100(3)/100(3)	100(3)/100(3)	125(3)/125(3)	160(3)/160(3)	125(3)/125(3)	125(3)/125(3)	125(3)/125(3)	200(3)/200(3)
Operational power in AC-23 (kW)(1)(4)									
At 400 VAC without pre-break AC		63/63	63/63	80/80	80/80	80/80	80/80	80/80	100/100
At 690 VAC without pre-break AC		90/90	90/90	110/110	110/110	110/110	110/110	110/110	150/185
Reactive power (kvar)(4)									
At 400 VAC		55	55	75	70	75	75	90	90
Fuse protected short-circuit characteristics BS88/DIN(5)									
Prospective short-circuit current (kA rms)		-/100	-/100	-/100 (50)	50/-	80/100	80/100	50/-	80/-
Associated fuse rating (A)		-/125	-/125	-/125 (160)	160/-	160/160	160/160	200/-	200/-
Short-circuit capacity(5)(6)									
Fuse switch cut-off current (kA peak)		20	20	20	20	22.7	22.7	20	32.5
Fuse selection (maximum fuse size)(6)									
SOCOMEC BS88	Standard max	-	-	-	-	6A4 0160	6B20 0160	6A40 0200	6B20 0200
	Motor max	-	-	-	6A40 0160	6A4M 0160	6B1M 0200	6A4M 0200	6B2M 0315
SOCOMEC DIN	Distribution (gl - gG)	6032 0125	6692 0125	6692 0160	-	6702 0160	-	-	-
	Motor (aM)	6033 0125	6693 0125	6693 0160	-	6703 0160	-	-	-
BUSSMANN	Standard max	-	-	-	DEO 160	DEO 160	DD 160	DEO 20	DD 200
	Motor max	-	-	-	CEO 100M160	DEO 100M200	CD 100M200	DEO 100M200	DD 200M315
LAWSON	Standard max	-	-	-	CTFP 160	TFP 160	TF 160	CTFP 200	TF 200
	Motor max	-	-	-	CTCP 100M160	TCP 100M200	TCP 100M200	CTCP 100M200	TC 200M315
GE	Standard max	-	-	-	TCP 100	TFP 160	TF 160	TCP 100	TF 200
	Motor max	-	-	-	OCP 100M160	TCP 100M201	TC 100M200	OCP 100M160	TF 200M315
Connection									
Minimum Cu cable section (mm²)		35	35	35	35	50	50	50	95
Maximum Cu cable section (mm²)		95	95	95	95	95	95	95	240
Maximum busbar width (mm)		20	20	20	20	20	20	20	32
Min. / Max. tightening torque (Nm)		8.3/13	8.3/13	8.3/13	8.3/13	8.3/13	8.3/13	8.3/13	20/26
Mechanical characteristics									
Endurance (number of operating cycles)		10000	10000	10000	10000	10000	10000	10000	10000
Weight of 3 P switch (kg)		1.5	1.5	1.8	1.8	1.8	1.8	1.8	3.2
Weight of 4 P switch (kg)		2	2	2.3	2.3	2.3	2.3	2.3	4.5
Weight of 1 P extra (kg)		0.5	0.5	0.5	0.5	0.5	0.5	0.5	1.3
Frame pitch (mm)		36	36	36	36	50	50	36	60

** For fuse size A4: max Ø 31 mm.*
(1) A/B: Category with index A = frequent operation
Category with index B = infrequent operation.
(2) With terminal shrouds or terminal screen.
(3) 4-pole device with 2 pole in series, by polarity.
(4) The power value is given for information only, the current values vary from one manufacturer to another.
(5) For a rated operating voltage U_e = 400 VAC.
(6) Please ensure that the cut-off current of the fuse links does not exceed the value given for the fuse switch.

FUSERBLOC
20 to 1250 A

Functions
Illustrations
References BS88
References NFC and DIN
Accessories
Characteristics
Dimensions

Characteristics (according to IEC 60947-3)

Thermal current I_{th} (40 °C)		250 A	315 A	400 A	630 A	800 A	800 A	1250 A
BS88/DIN fuse size		B1-B2-B3/1	B1-B2-B3/-	B1-B2-B3-B4/2	C1-C2/3	C1-C2-C3/3	-/4	D1/4
Frame size for direct operation		5	6	6	17	17	18	18
Frame size for front and side operation		15	16	16	17	17	18	18
Rated insulation voltage U_i (V)		750	800	800	1000	1000	1000	1000
Rated impulse withstand voltage U_{imp} (kV)		8	8	8	12	12	12	12
Rated operational currents I_e (A)								
Rated voltage	Load duty category	A/B(1)	A/B(1)	A/B(1)	A/B(1)	A/B(1)	A/B(1)	A/B(1)
400 VAC	AC-22 A/AC-22 B	250/250	315/315	400/400	630/630	800/800	800/800	1250/1250
	AC-23 A/AC-23 B	250/250	315/315	400/400	630/630	800/800	800/800	1000/1250
690 VAC	AC-22 A/AC-22 B	250(2)/250(2)	315(2)/315(2)	315/400	500/630	800/800	800/800	800/1250
	AC-23 A/AC-23 B	250(2)/250(2)	250(2)/315(2)	250/315	315/400	630/630	800/800	800/630
220 VDC	DC-22 A/DC-22 B	250/250	250/250	315/315	315/630	800/800	800/800	1250/1250
	DC-23 A/DC-23 B	200/200	200/200	200/315	400/630	800/800	800/800	1250/1250
440 VDC	DC-22 A/DC-22 B	250(3)/250(3)	250(3)/250(3)	315(4)/315(4)	315/630(4)	800(3)/800(3)	800/800	1000(3)/1000(3)
	DC-23 A/DC-23 B	200(3)/200(3)	200(3)/200(3)	250(4)/315(4)	400(4)/630(4)	800(3)/800(3)	800/800(3)	1000(3)/1000(3)
Operational power in AC-23 (kW)(1)(5)								
At 400 VAC without pre-break AC		132/132	160/160	220/220	355/355	450/450	450/450	560/560
At 690 VAC without pre-break AC		220/220	220/295	220/295	295/400	400/400	400/400	400/475
Reactive power (kvar)(5)								
At 400 VAC		115	145	185	290	365	355	460
Fuse protected short-circuit characteristics BS88/DIN(6)								
Prospective short-circuit current (kA rms)		80/100	80/-	80/50	80/100	80/100	-/100	-/100
Associated fuse rating (A)		250/250	315/-	400/400	630/630	800/800	-/800	-/1250
Short-circuit capacity(6)(7)								
Fuse switch cut-off current (kA peak)		32.5	40	40	70	80	80	90
Fuse selection (maximum fuse size)(7)								
SOCOMEC BS88	Standard max	6B20 0250	6B30 0315	6B40 0400	6C20 0630	6C30 0800	-	
	Motor max	6B2M 0315	6B3M 0400	6B4M 0500	-	-	-	
SOCOMEC DIN	Distribution (gl - gG)	6712 0250	-	6722 0400	6732 0400	-	6746 0800	6746 1200
	Motor (aM)(8)	6713 0250	-	6723 0400	6733 0400	-	6747 0800	6747 1200
BUSSMANN	Standard max	ED 250	ED 315	ED 400	FF 630	GF 800		
	Motor max	DD 200M315	ED 315M400	ED 400M500	-	-		
LAWSON	Standard max	TKF 250	TKF 315	TMF 400	TTM 630	TLM 800		
	Motor max	TF 200M315	TKF 315M400	TMF 400M500	-	-		
GE	Standard max	TKF 250	TKF 315	TMF 400	TTM 630	TLM 800		
	Motor max	TF 200M315	TKF 315M355	TMF 400M450	-	-		
Connection								
Minimum Cu cable section (mm²)		95	185	185	2 x 150	2 x 185	-	-
Maximum Cu cable section (mm²)		240	240	240	2 x 300	2 x 300	4 x 185	4 x 185
Maximum busbar width (mm)		32	45	45	63	63	80	80
Min. / Max. tightening torque (Nm)		20/26	20/26	20/26	40/45	40/45	40/45	40/45
Mechanical characteristics								
Endurance (number of operating cycles)		10000	10000	10000	8000	8000	5000	5000
Weight of 3 P switch (kg)		3.2	4.8	4.8	16	17	25	25
Weight of 4 P switch (kg)		4.5	6.1	6.1	20	21.5	30	30
Weight of 1 P extra (kg)		1.3	1.3	1.3	-	-	3	3
Frame pitch (mm)		60	66	66	94	94	120	120

(1) A/B: Category with index A = frequent operation
Category with index B = infrequent operation.
(2) With terminal shrouds or terminal screen.
(3) 4-pole device with 2 pole in series. by polarity.
(4) Poles cannot be juxtaposed.
(5) The power value is given for information only, the current values vary from one manufacturer to another.
(6) For a rated operating voltage U_e = 400 VAC.
(7) Please ensure that the cut-off current of the fuse links does not exceed the value given for the fuse switch.
(8) Fuses with striker available on request.

This document is not a contract. SOCOMEC reserves the right to modify features without prior notice in view of continued improvement. 2008 - 2009

Dimensions

BS88 - External front operation

• **FUSERBLOC 20 to 32 A** (fuse size A1)

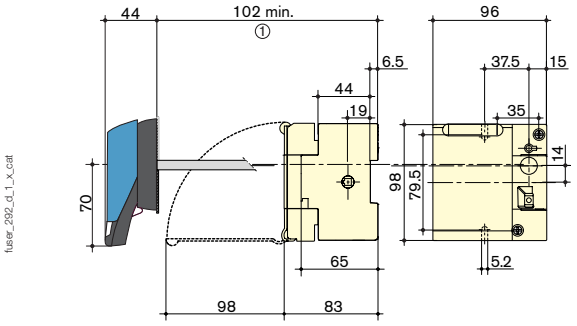

1. With 1 U type AC: 130 mm
With 2 U type AC: 155 mm

BS88 - External side operation

• **FUSERBLOC 20 to 32 A** (fuse size A1)

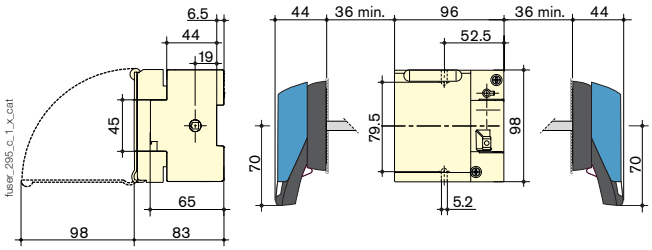

BS88 - External front operation fuse combination CHANGEOVER

• **FUSERBLOC 20 to 32 A** (fuse size A1)

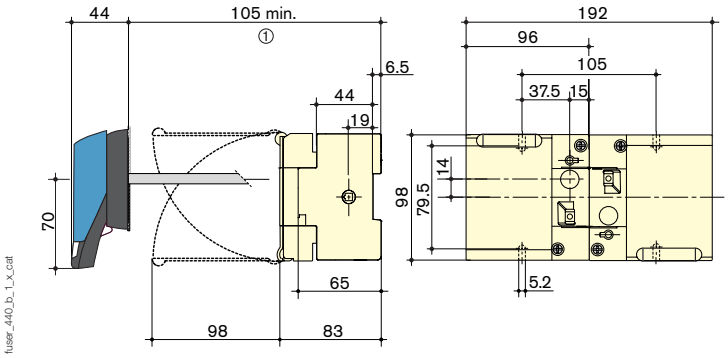

.1. With 1 U type AC: 130 mm
With 2 U type AC: 155 mm

• **Door drilling**

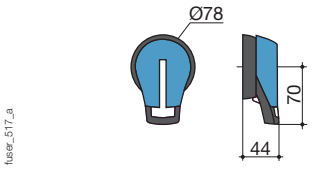

S1 handle

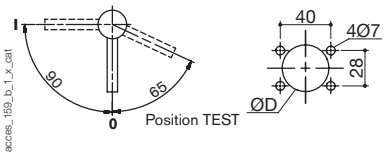

Front operation

Conventional fixing (from rear): **D** = 31 to 37 mm.
Fast fixing (external, door closedd): **D** = 37 mm.

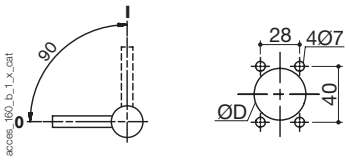

Side operation

Conventional fixing (from rear): **D** = 31 to 37 mm.
Fast fixing (external, door closeddd): **D** = 37 mm.

FUSERBLOC
20 to 1250 A

Functions
Illustrations
References BS88
References NFC and DIN
Accessories
Enclosed fuse switches
Characteristics
Dimensions

Dimensions

NFC and DIN - External front operation

• **FUSERBLOC 25 to 32 A** (fuse size 10 x 38)

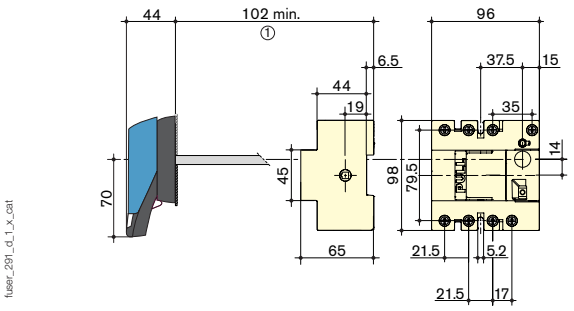

1. With 1 U type AC: 130 mm
With 2 U type AC: 155 mm

• **FUSERBLOC 32 A** (fuse size 14 x 51)

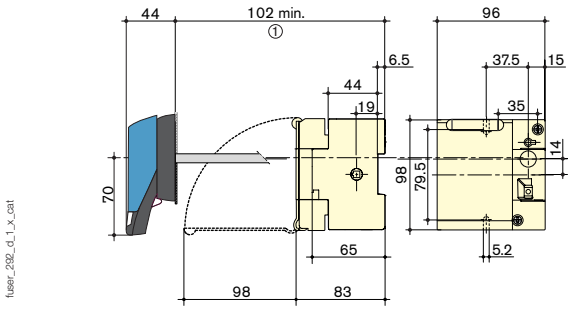

NFC and DIN - External side operation

• **FUSERBLOC 25 to 32 A** (fuse size 10 x 38)

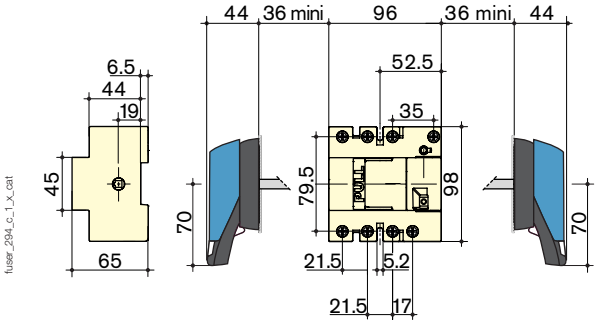

• **FUSERBLOC 32 A** (fuse size 14 x 51)

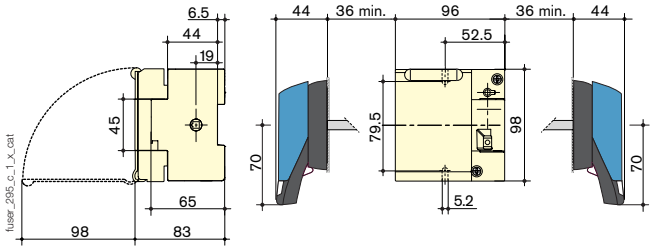

NFC and DIN - External front operation fuse combination CHANGEOVER

• **FUSERBLOC 25 to 32 A** (fuse size 10 x 38 and 14 x 51)

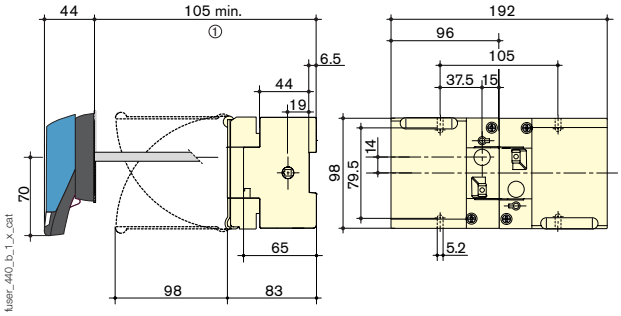

1. With 1 U type AC: 130 mm
With 2 U type AC: 155 mm

• **Door drilling**

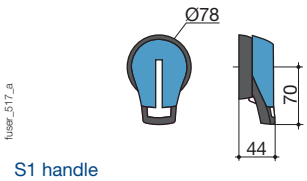

S1 handle

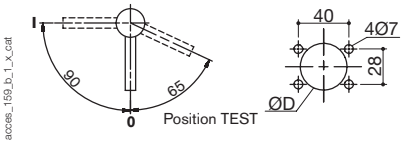

Front operation

Conventional fixing (from rear): **D** = 31 to 37 mm.
Fast fixing (external, door closedd): **D** = 37 mm.

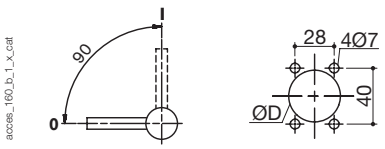

Side operation

Conventional fixing (from rear): **D** = 31 to 37 mm.
Fast fixing (external, door closeddd): **D** = 37 mm.

This document is not a contract. SOCOMEC reserves the right to modify features without prior notice in view of continued improvement. 2008 - 2009

Dimensions

External front or right side operation

- **BS88 - FUSERBLOC 32 A** (fuse size A4 - max Ø 31 mm)
- **NFC and DIN - FUSERBLOC 50 A** (fuse size 14x51)

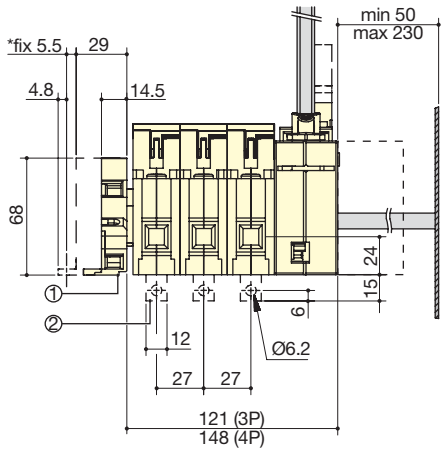

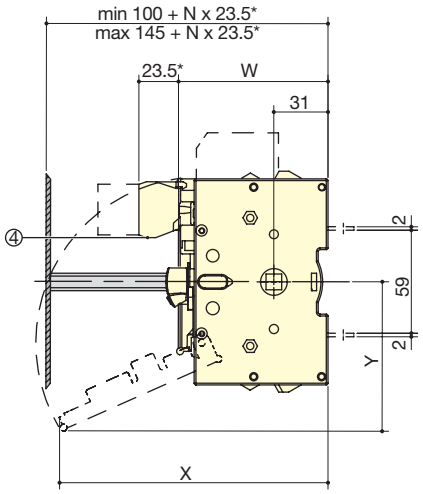

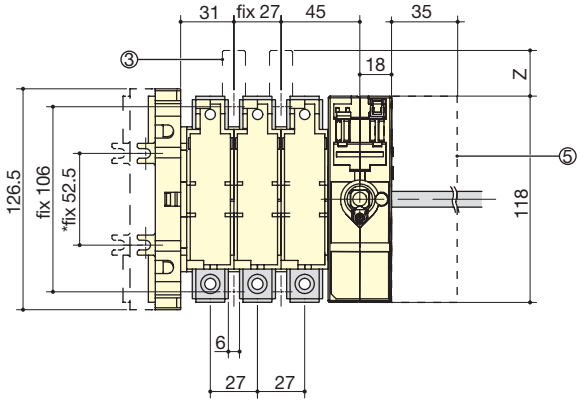

tuser_624_b

* to use if pre-break auxiliary contact number > 4
W : 84.5 for BS88 ; 87 for NFC and DIN
X : 153 only for DIN
Y : 85 only for DIN
Z : 26 only for DIN

1. S type auxiliary contact NO + NC to use if block number > 4
2. Rear connection (option)
3. 1 or 2 pre-break auxiliary contact (fuse blown indication)
4. 1 to 4 pre-break auxiliary contact for signalisation
5. Additional contact holder for U type AC

- **Door drilling**

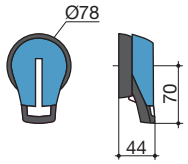

tuser_517_a

S1 handle

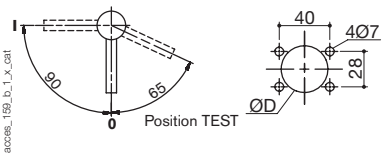

access_159_b_1_x_cat

Front operation

Conventional fixing (from rear): **D** = 31 to 37 mm.
Fast fixing (external, door closed): **D** = 37 mm.

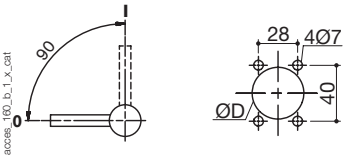

access_160_b_1_x_cat

Side operation

Conventional fixing (from rear): **D** = 31 to 37 mm.
Fast fixing (external, door closed): **D** = 37 mm.

FUSERBLOC
20 to 1250 A

Functions
Illustrations
References BS88
References NFC and DIN
Accessories
Enclosed fuse switches
Characteristics
Dimensions

Dimensions

External front or right side operation

- **BS88 - FUSERBLOC 63 A** (fuse size A2-A3)
- **NFC and DIN - FUSERBLOC 63 A** (fuse size 00C)

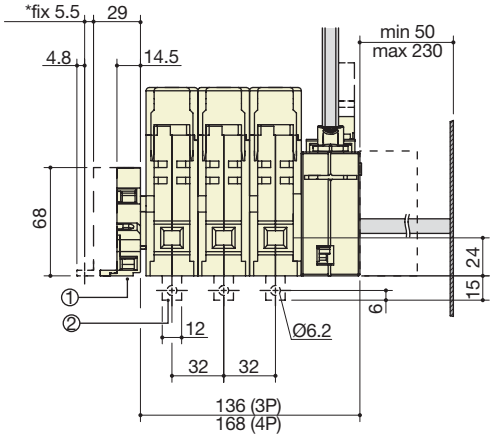

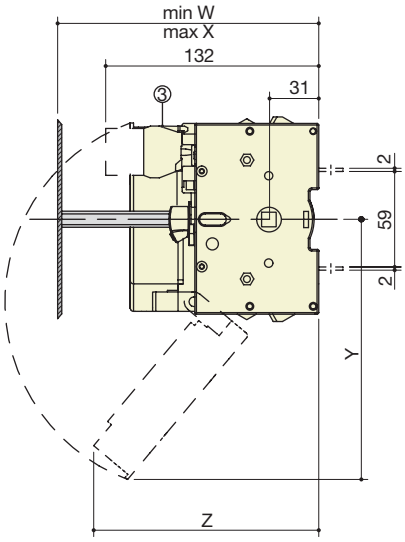

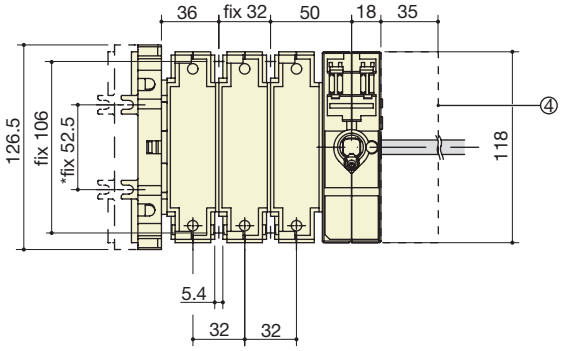

fuser_625_b

* to use if pre-break auxiliary contact number > 4
W : 124 + N x 23.5 for BS88 ; 139 for NFC and DIN
X : 145 + N x 23.5 for BS88 ; 145 for NFC and DIN
Y : 159 only for DIN
Z : 145 only for DIN

1. S type auxiliary contact NO + NC to use if block number > 4
2. Rear connection (option)
3. 1 to 4 pre-break auxiliary contact for signalisation
4. Additional contact holder for U type AC

- **Door drilling**

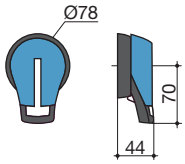

fuser_517_a

S1 handle

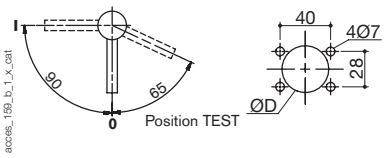

access_159_b_1_X_cat

Front operation

Conventional fixing (from rear): **D** = 31 to 37 mm.
Fast fixing (external, door closed): **D** = 37 mm.

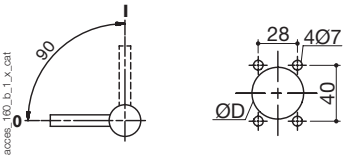

access_160_b_1_X_cat

Side operation

Conventional fixing (from rear): **D** = 31 to 37 mm.
Fast fixing (external, door closedd): **D** = 37 mm.

This document is not a contract. SOCOMEC reserves the right to modify features without prior notice in view of continued improvement. 2008 - 2009

Dimensions

External front or right side operation

- **BS88 - FUSERBLOC 100 A** (fuse size A4 - max Ø 31 mm)
- **NFC and DIN - FUSERBLOC 100 to 125 A** (fuse size 22x58)
  FUSERBLOC 125 to 160 A (fuse size 00)

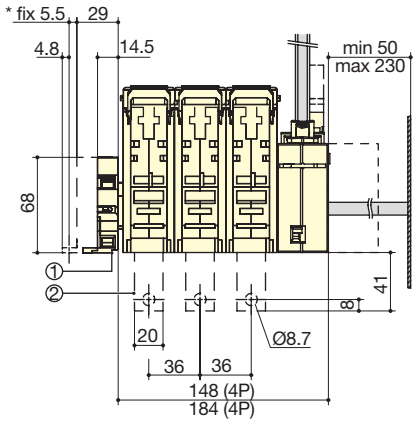

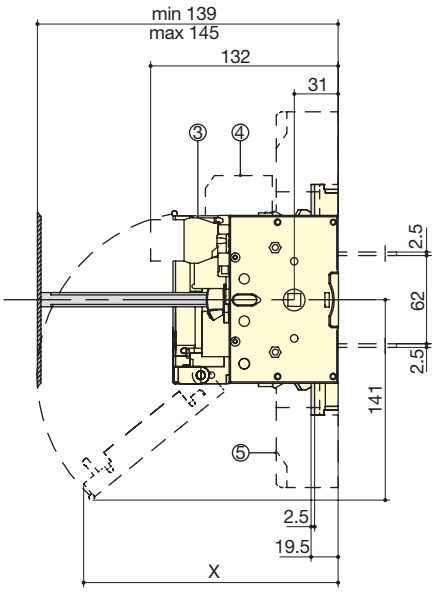

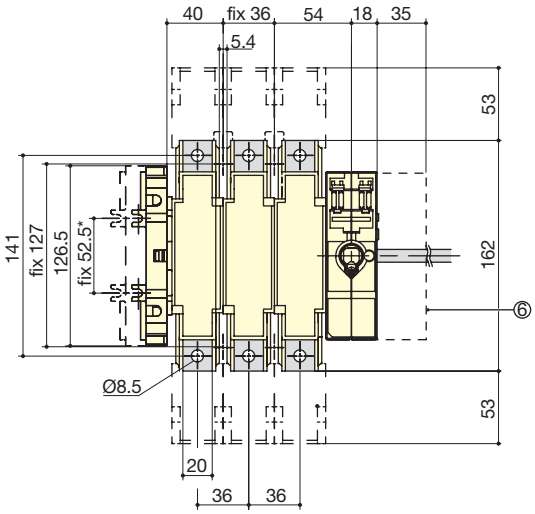

fuser_626_a

* to use if pre-break auxiliary contact number > 4

X: 179 for BS88 / NFC and DIN 100 to 125 A
189 for NFC and DIN 125 to 160 A

1. S type auxiliary contact NO + NC to use if block number > 4
2. Rear connection (option)
3. 1 to 4 pre-break auxiliary contact for signalisation
4. 1 or 2 pre-break auxiliary contact (fuse blown indication)
5. Terminal shrouds
6. Additional contact holder for U type AC

- **Door drilling**

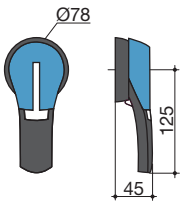

fuser_518_a

S2 handle

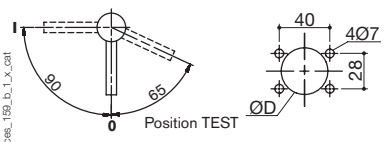

access_159_b_1_x_cat

Front operation

Conventional fixing (from rear): **D** = 31 to 37 mm.
Fast fixing (external, door closed): **D** = 37 mm.

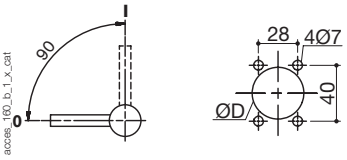

access_160_b_1_x_cat

Side operation

Conventional fixing (from rear): **D** = 31 to 37 mm.
Fast fixing (external, door closed): **D** = 37 mm.

FUSERBLOC
20 to 1250 A

Functions
Illustrations
References BS88
References NFC and DIN
Accessories
Enclosed fuse switches
Characteristics
Dimensions

Dimensions

External front or right side operation

• **BS88 - FUSERBLOC CD 160 to CD 200 A** (fuse size A3-A4) - Note: A4 max Ø 31 mm

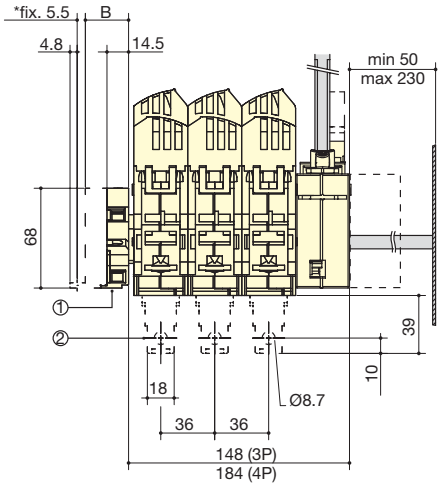

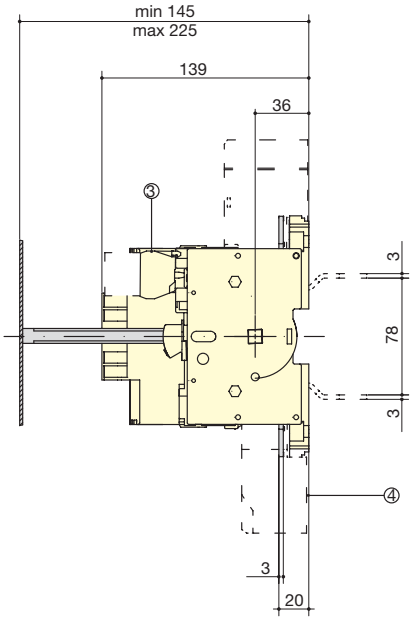

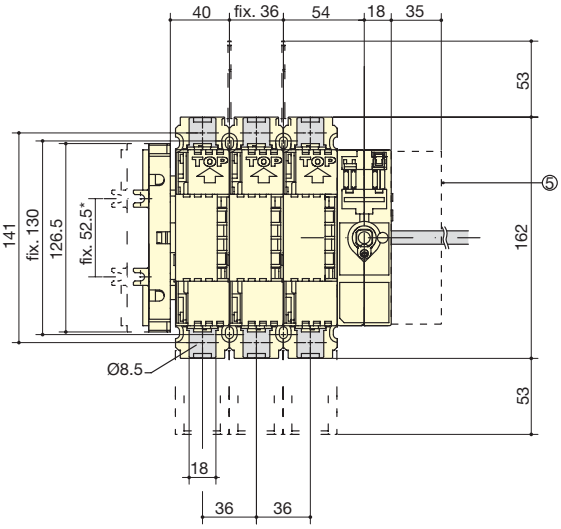

fuser_627_b

* to use if pre-break auxiliary contact number > 4
1. S type auxiliary contact NO + NC to use if block number > 4
2. Rear connection (option)
3. 1 to 4 pre-break auxiliary contact for signalisation
4. Terminal shrouds
5. Additional contact holder for U type AC

• **Door drilling**

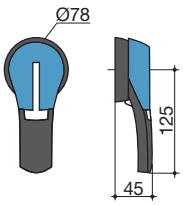

fusgr_518_a

S2 handle

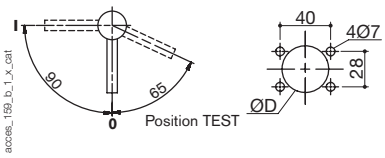

access_159_b_1_X_cat

Front operation

Conventional fixing (from rear): **D** = 31 to 37 mm.
Fast fixing (external, door closed): **D** = 37 mm.

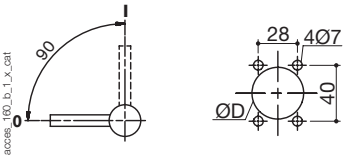

access_160_b_1_X_cat

Side operation

Conventional fixing (from rear): **D** = 31 to 37 mm.
Fast fixing (external, door closed): **D** = 37 mm.

This document is not a contract. SOCOMEC reserves the right to modify features without prior notice in view of continued improvement. 2008 - 2009

Dimensions

External front or right side operation

- **BS88 - FUSERBLOC 160 A** (fuse size A4-B1-B2)
- **NFC and DIN - FUSERBLOC 160 A** (fuse size 0)

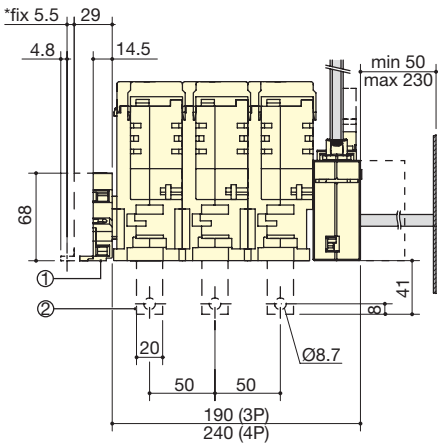

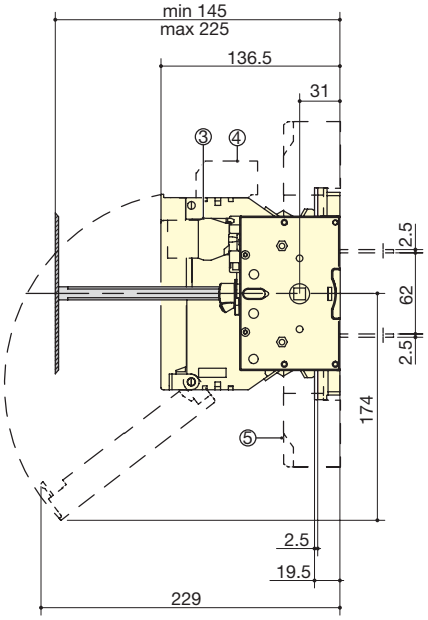

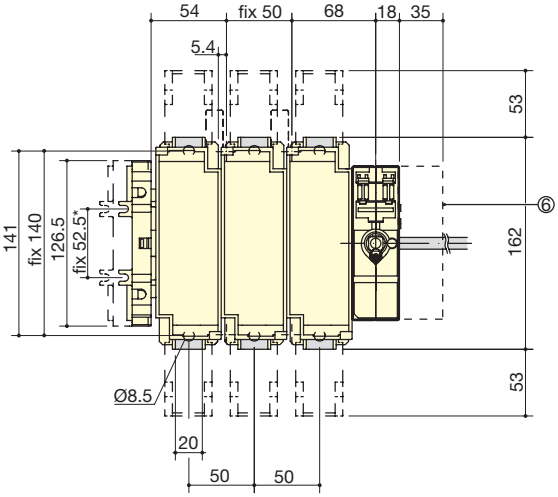

* to use if pre-break auxiliary contact number > 4

1. S type auxiliary contact NO + NC to use if block number > 4
2. Rear connection (option)
3. 1 to 4 pre-break auxiliary contact for signalisation
4. 1 or 2 pre-break auxiliary contact (fuse blown indication)
5. Terminal shrouds
6. Additional contact holder for U type AC

- **Door drilling**

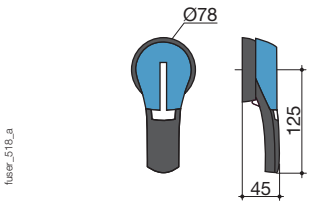

S2 handle

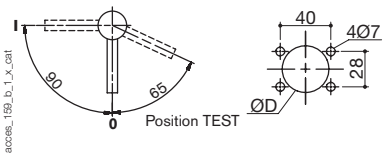

Front operation

Conventional fixing (from rear): **D** = 31 to 37 mm.
Fast fixing (external, door closed): **D** = 37 mm.

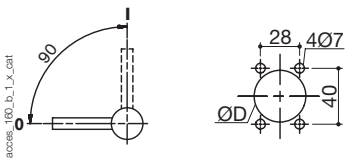

Side operation

Conventional fixing (from rear): **D** = 31 to 37 mm.
Fast fixing (external, door closed): **D** = 37 mm.

FUSERBLOC
20 to 1250 A

Functions
Illustrations
References BS88
References NFC and DIN
Accessories
Enclosed fuse switches
Characteristics
Dimensions

Dimensions

External front or right side operation

- **BS88 - FUSERBLOC 200 A** (fuse size B1-B2)
  FUSERBLOC 250 A (fuse size B1-B2-B3)
- **NFC and DIN - FUSERBLOC 250 A** (fuse size 1)

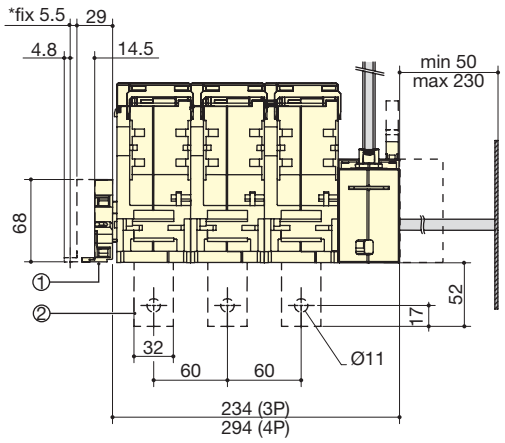

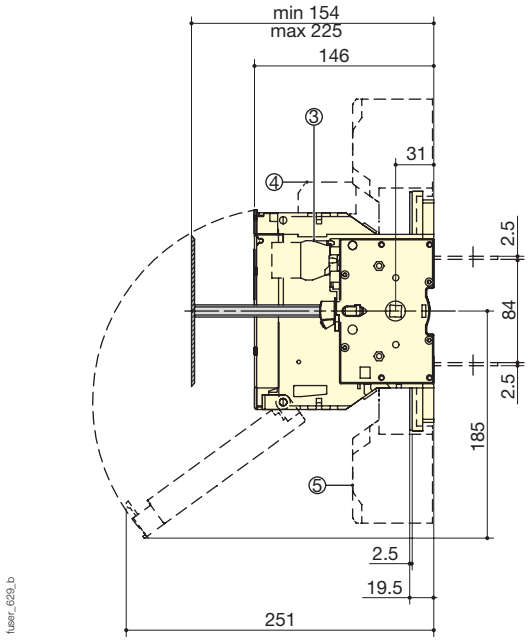

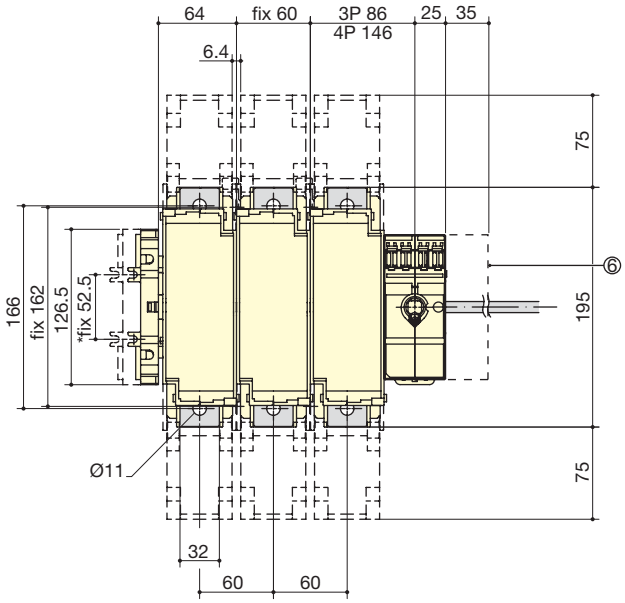

* to use if pre-break auxiliary contact number > 4
1. S type auxiliary contact NO + NC to use if block number > 4
2. Rear connection (option)
3. 1 to 8 pre-break auxiliary contact for signalisation
4. 1 or 2 pre-break auxiliary contact (fuse blown indication)
5. Terminal shrouds
6. Additional contact holder for U type AC

- **Door drilling**

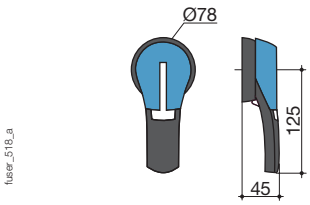

S2 handle

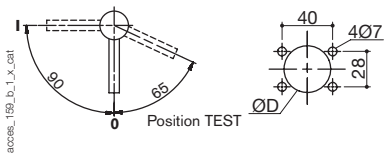

Front operation

Conventional fixing (from rear): **D** = 31 to 37 mm.
Fast fixing (external, door closed): **D** = 37 mm.

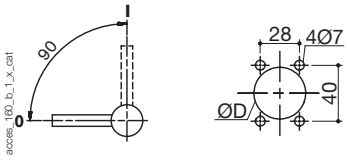

Side operation

Conventional fixing (from rear): **D** = 31 to 37 mm.
Fast fixing (external, door closed): **D** = 37 mm.

This document is not a contract. SOCOMEC reserves the right to modify features without prior notice in view of continued improvement. 2008 - 2009

Dimensions

External front or right side operation

- **BS88 - FUSERBLOC 315 A** (fuse size B1-B2-B3)
  FUSERBLOC 400 A (fuse size B1-B2-B3-B4)
- **NFC and DIN - FUSERBLOC 400 A** (fuse size 2)

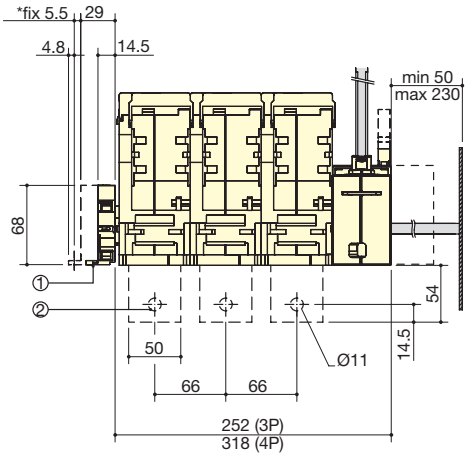

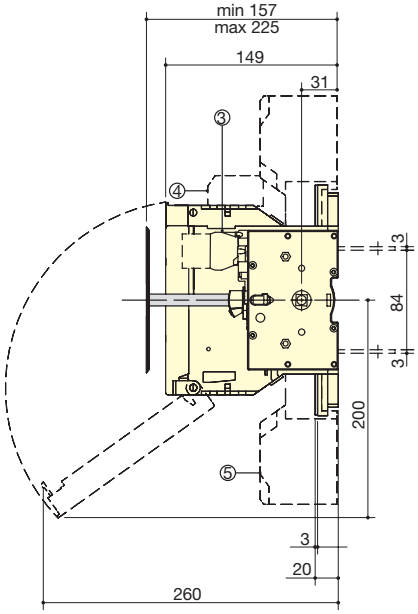

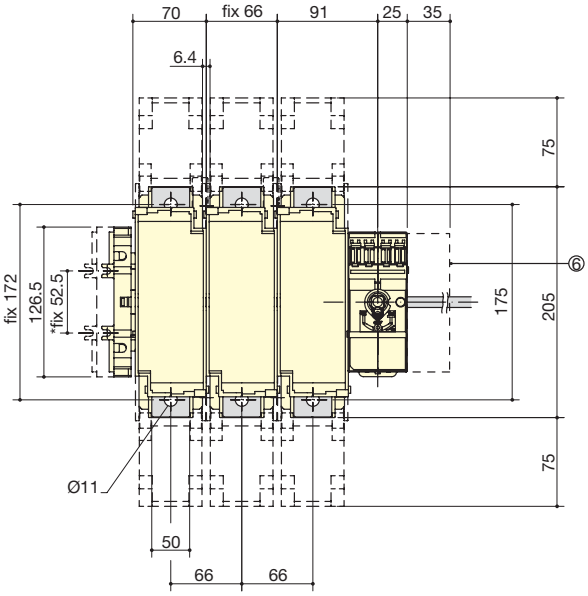

fuser_630_b

* to use if pre-break auxiliary contact number > 4

1. S type auxiliary contact NO + NC to use if block number > 4
2. Rear connection (option)
3. 1 to 8 pre-break auxiliary contact for signalisation
4. 1 or 2 pre-break auxiliary contact (fuse blown indication)
5. Terminal shrouds
6. Additional contact holder for U type AC

- **Door drilling**

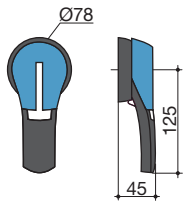

fusar_518_a

S2 handle

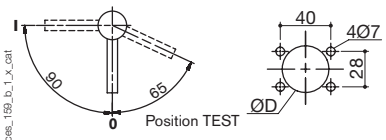

access_159_b_1_x_cat

Front operation

Conventional fixing (from rear): **D** = 31 to 37 mm.
Fast fixing (external, door closed): **D** = 37 mm.

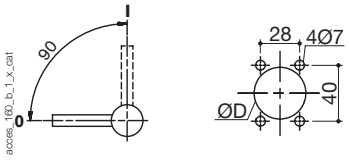

access_160_b_1_x_cat

Side operation

Conventional fixing (from rear): **D** = 31 to 37 mm.
Fast fixing (external, door closed): **D** = 37 mm.

FUSERBLOC
20 to 1250 A

Functions
Illustrations
References BS88
References NFC and DIN
Accessories
Enclosed fuse switches
Characteristics
Dimensions

Dimensions

BS88 - External front operation fuse combination CHANGEOVER

- **FUSERBLOC 20 to 32 A** (frame size 0 - fuse size A1) see page A.185
- **FUSERBLOC 32 to 400 A**

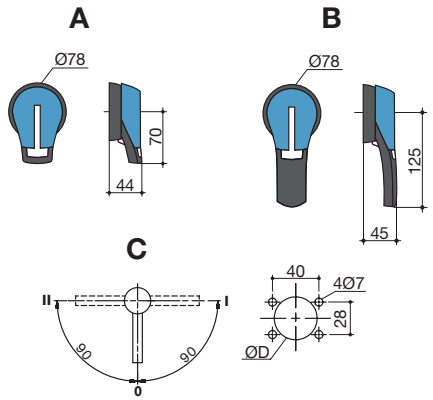

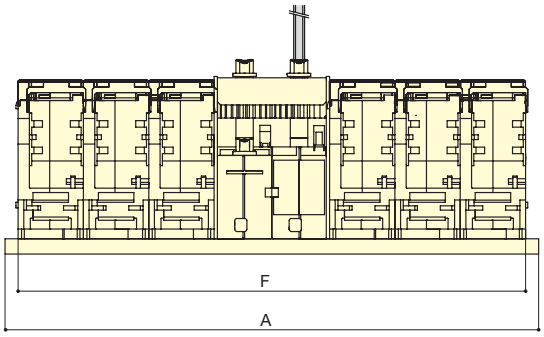

Conventional fixing (from rear): **D** = 31 to 37 mm.
Fast fixing (external, door closed): **D** = 37 mm.

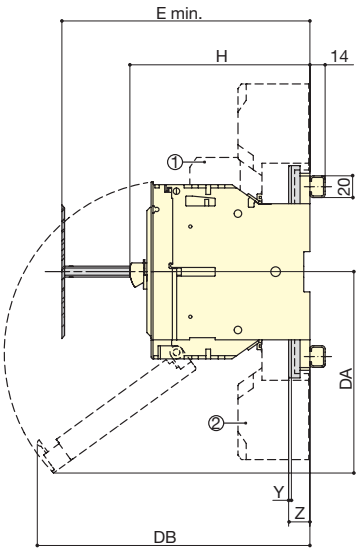

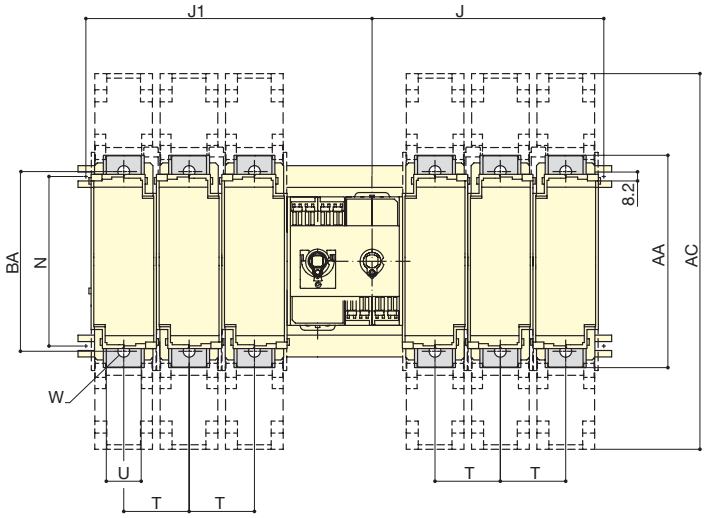

fuser_634_d_1_x_cat

A. S1 handle: 50 and 63 A
B. S2 handle: 100 to 400 A
C. Door drilling

1. Fuse blown indicaion not available for BS88
2. Terminal shrouds

Rating (A)	Fuse size	Frame size	Overall dimensions A 3p.	A 4p.	E min	E max	Terminal shrouds AC	Switch body F 3p.	F 4p.	H	J 3p.	J 4p.	J1 3p.	J1 4p.	DA	DB	Switch mounting N	T	Connection terminals U	W	Y	Z	AA	BA
32	A1	11	264	318	100(1)	146(1)	-	242	296	87	102	129	138	165	85	153	90	27	-	-	-	-	118	-
63	A2-A3	12	294	358	124	145	-	272	336	116.5(2)	121	153	157	189	159	145	90	32	-	-	-	-	118	-
100	A4*	13	318	390	124	145	268	296	368	116(2)	133	169	169	205	141	187	128	36	20	8.5	2.5	19.5	162	141
160 compact	A3-A4*	13a	318	390	145	225	268	296	368	139	133	169	169	205	-	-	128	36	18	8.5	3	20	162	141
160	A4*	14	402	502	124	225	268	380	480	136.5	176	226	212	262	174	229	128	50	20	8.5	2.5	19.5	162	141
160	B1-B2	14	402	502	130	225	268	380	480	136.5	176	226	212	262	174	229	128	50	20	8.5	2.5	19.5	162	141
200 compact	A3-A4*	13a	318	390	145	225	268	296	368	139	133	169	169	205	-	-	128	36	18	8.5	3	20	162	141
200	B1-B2	15	490	610	130	225	345	468	588	146	213	273	263	323	185	251	155	60	32	11	2.5	19.5	195	166
250	B1-B2-B3	15	490	610	154	225	345	468	588	146	213	273	263	323	185	251	155	60	32	11	2.5	19.5	195	166
315	B1-B2-B3	16	526	658	154	225	355	504	636	149	231	297	281	347	200	260	168	66	50	11	3	20	205	175
400	B1-B2-B3-B4	16	526	658	157	225	355	504	636	149	231	297	281	347	200	260	168	66	50	11	3	20	205	175

** For fuse size A4: max Ø 31 mm*
(1) 1 AC: +23.5 / 2 AC: +47
(2) 132 with 2 AC

This document is not a contract. SOCOMEC reserves the right to modify features without prior notice in view of continued improvement. 2008 - 2009

Dimensions

NFC and DIN - External front operation fuse combination CHANGEOVER

- **FUSERBLOC 25 to 32 A** (frame size 0 - fuse size A1) see page A.186
- **FUSERBLOC 50 to 400 A**

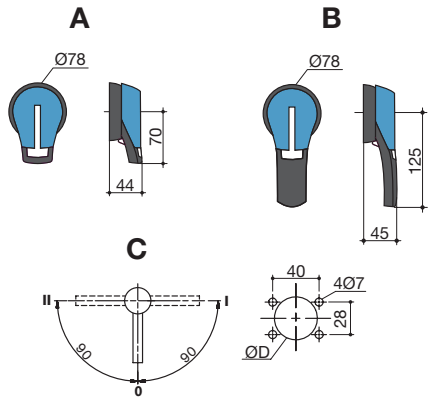

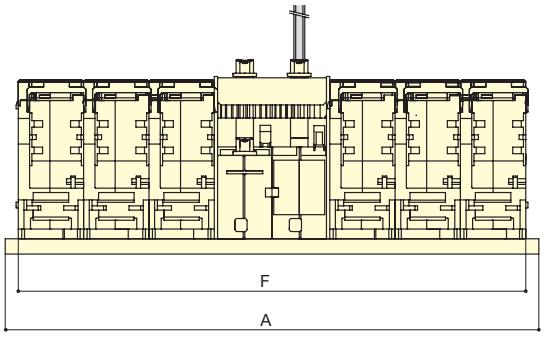

Conventional fixing (from rear): **D** = 31 to 37 mm
Fast fixing (external, door closed): **D** = 37 mm

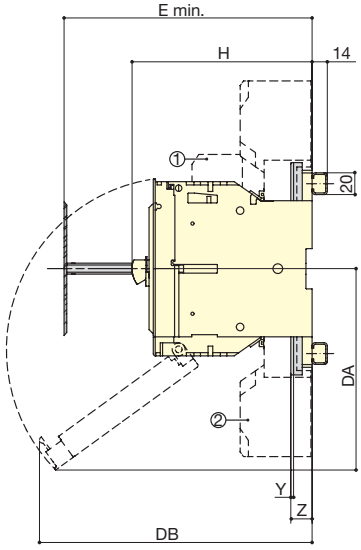

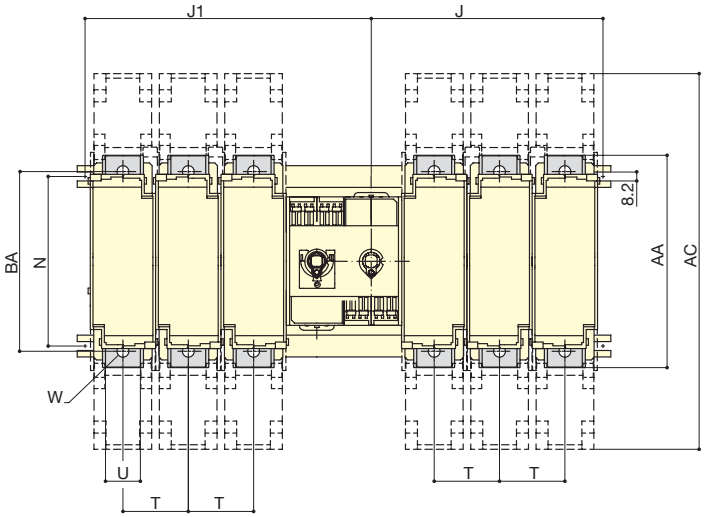

fuser_634_d_1_x_cat

A. S1 handle: 50 and 63 A
B. S2 handle: 100 to 400 A
C. Door drilling

1. 1 or 2 fuse blown indication
2. Terminal shrouds

Rating (A)	Fuse size	Frame size	Overall dimensions				Terminal shrouds	Switch body								Switch mounting		Connection terminals					
			A 3p	A 4p	E min	E max	AC	F 3p	F 4p	H	J 3p	J 4p	J1 3p	J1 4p	DA	DB	N	T	U	W	Y	Z	AA	BA
50	14x51	11	264	318	100(1)	146(1)	-	242	296	87(1)	102	129	138	165	85	153	90	27	-	-	-	-	118	-
63	00C	12	294	358	124	145	-	272	336	116,5(2)	121	153	157	189	159	145	90	32	-	-	-	-	118	-
100	22x58	13	318	390	134	145	268	296	368	116(2)	133	169	169	205	141	187	128	36	20	8,5	2,5	19,5	162	141
125	22x58	13	318	390	134	145	268	296	368	116(2)	133	169	169	205	141	187	128	36	20	8,5	2,5	19,5	162	141
125	00	13	318	390	134	145	268	296	368	126,5	133	169	169	205	141	193	128	36	20	8,5	2,5	19,5	162	141
160	00	13	318	390	134	145	268	296	368	126,5	133	169	169	205	141	193	128	36	20	8,5	2,5	19,5	162	141
160	0	14	402	502	145	225	268	380	480	136,5	176	226	212	262	174	229	128	50	20	8,5	2,5	19,5	162	141
250	1	15	490	610	154	225	345	468	588	146	213	273	263	323	185	251	155	60	32	11	2,5	19,5	195	166
400	2	16	526	658	157	225	355	504	636	149	231	297	281	347	200	260	168	66	50	11	3	20	205	175

(1) 1 AC: +23.5 / 2 AC: +47
(2) 132 with 2 AC

FUSERBLOC
20 to 1250 A

Functions
Illustrations
References BS88
References NFC and DIN
Accessories
Enclosed fuse switches
Characteristics
Dimensions

Dimensions

BS88 - Direct operation

• **FUSERBLOC 20 to 32 A** (frame size 0 - fuse size A1)

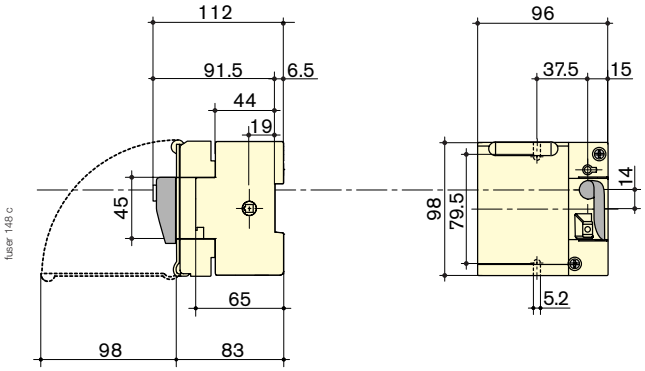

• **FUSERBLOC 32 to 400 A**

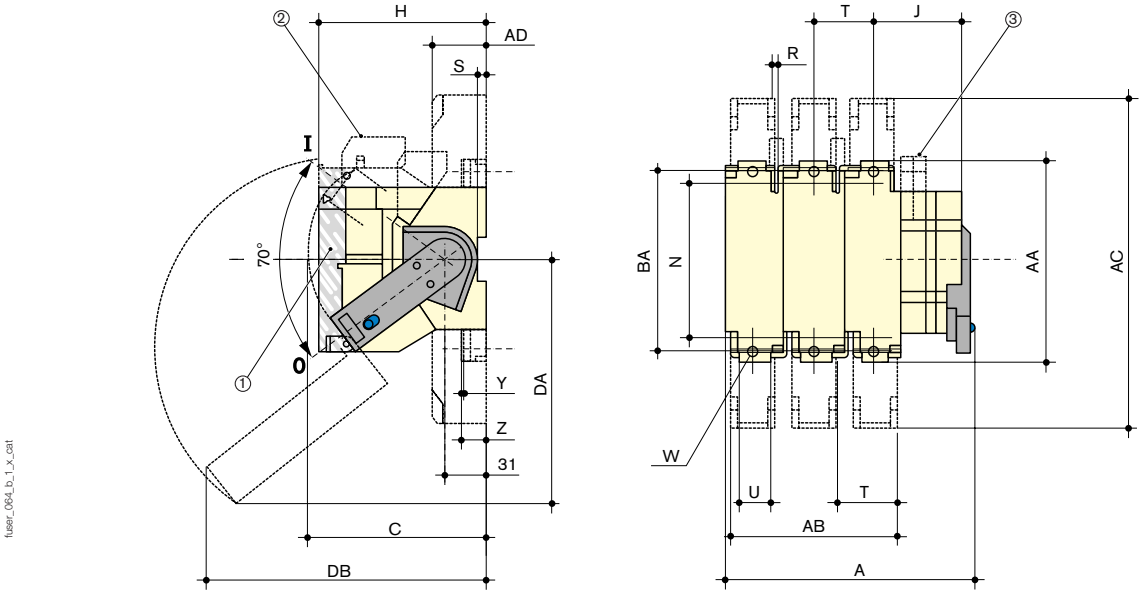

1. Protection screen lockable in position I
2. 1 or 2 fuse blown indication
3. 1 or 2 A type ACs

Rating (A)	Fuse size	Frame size	Overall dimensions			Terminal shrouds				Switch body				Switch mounting			Connection terminals						
			A 3p.	A 4p.	C	AB 3p.	AB 4p.	AC	AD	H	J	DA	DB	N	R	S	T	U	W	Y	Z	AA	BA
32	A1	1	133	165	134	-	-	-	-	116.5	36	159	145	106	5.4	6.5	27	-	-	-	-	118	-
63	A2-A3	2	133	165	134	-	-	-	-	116.5	36	159	145	106	5.4	6.5	32	-	-	-	-	118	-
100	A4*	3	150	186	173	108	144	268	44	116	38	-	-	127	5.4	-	36	20	8.5	2.5	19.5	162	141
160 compact	A3-A4*	3a	152	188	173	108	144	268	44	139	38	-	-	130	5.4	-	36	20	8.5	3	19.5	162	141
160	A4*	4	150	186	173	108	144	268	44	116	38	-	-	127	5.4	-	50	20	8.5	2.5	19.5	162	141
160	B1-B2	4	192	242	173	136	172	268	44	123	45	-	-	140	5.4	-	50	20	8.5	2.5	19.5	162	141
200 compact	A3-A4*	3a	152	188	173	108	144	268	44	139	38	-	-	130	5.4	-	36	20	8.5	3	19.5	162	141
200	B1-B2	5	192	242	173	136	172	268	44	123	45	-	-	140	5.4	-	60	20	8.5	2.5	19.5	162	166
250	B1-B2-B3	5	253	313	173	180	240	345	65	146	81	185	251	162	6.4	-	60	32	11	2.5	19.5	195	166
315	B1-B2-B3	6	253	313	173	180	240	345	65	146	81	185	251	162	6.4	-	66	32	11	2.5	19.5	195	175
400	B1-B2-B3-B4	6	271	337	173	192	258	355	65	149	86	200	260	172	6.4	-	66	50	11	3	20	205	175

** For fuse size A4: max Ø 31 mm*

This document is not a contract. SOCOMEC reserves the right to modify features without prior notice in view of continued improvement. 2008 - 2009

Dimensions

NFC and DIN - Direct operation

• **FUSERBLOC 25 to 32 A** (frame size 0 - fuse size 10 x 38)

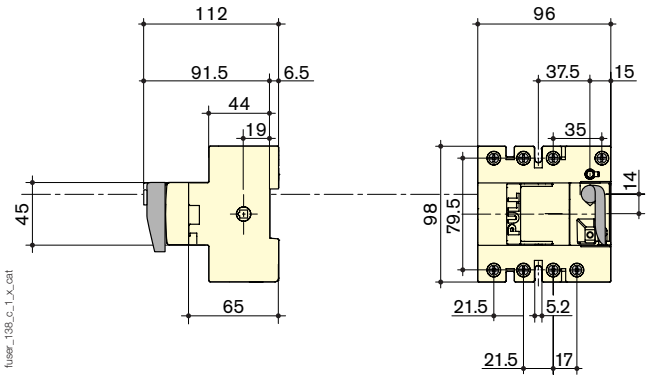

• **FUSERBLOC 32 A** (frame size 0 - fuse size 14 x 51)

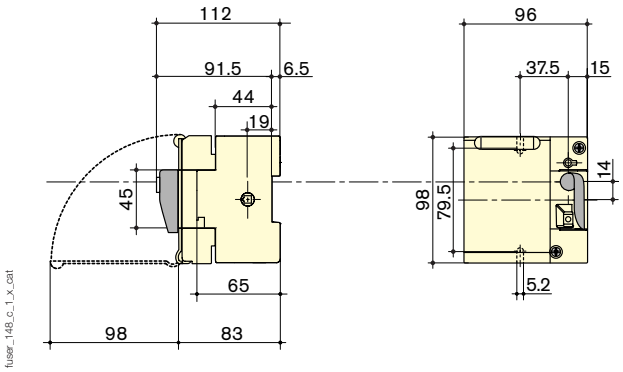

• **FUSERBLOC 50 to 400 A**

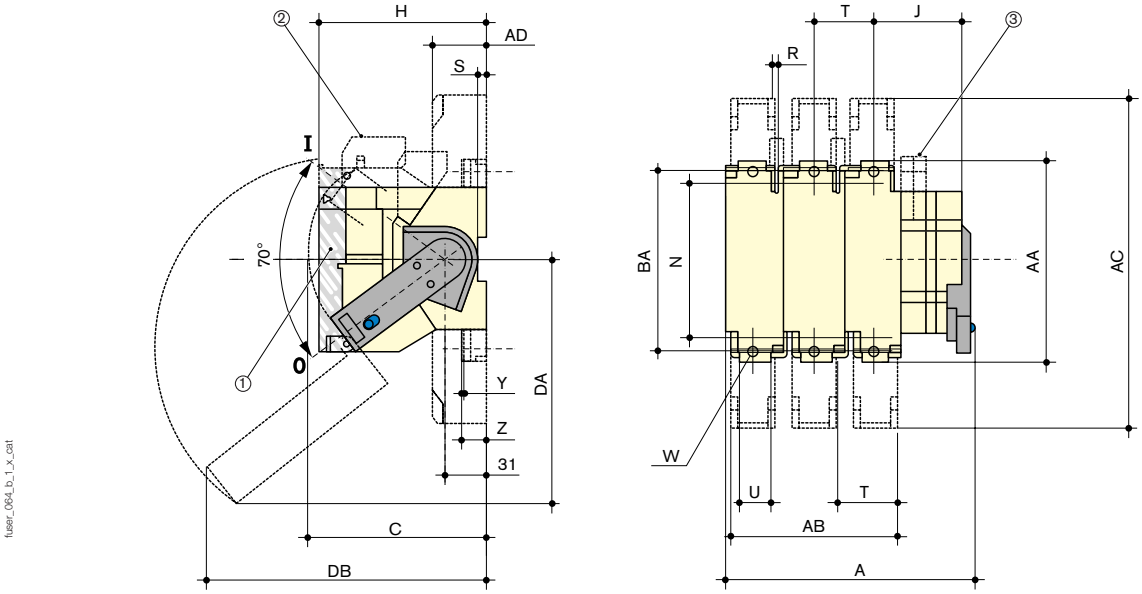

1. Protection screen lockable in position I
2. 1 or 2 fuse blown indication
3. 1 or 2 A type ACs

Rating (A)	Fuse size	Frame size	Overall dimensions			Terminal shrouds				Switch body				Switch mounting			Connection terminals						
			A 3p.	A 4p.	C	AB 3p.	AB 4p.	AC	AD	H	J	DA	DB	N	R	S	T	U	W	Y	Z	AA	BA
50	14 x 51	1	118	145	134	-	-	-	-	87	33.5	-	-	106	5.4	6.5	27	-	-	-	-	118	-
63	00C	2	133	165	134	-	-	-	-	116.5	36	159	145	106	5.4	6.5	32	-	-	-	-	118	-
100	22 x 58	3	150	186	173	108	144	268	44	116	38	-	-	127	5.4	-	36	20	8.5	2.5	19.5	162	141
125	22 x 58	3	150	186	173	108	144	268	44	116	38	-	-	127	5.4	-	36	20	8.5	2.5	19.5	162	141
125	00	3	150	186	173	108	144	268	44	126.5	38	141	193	127	5.4	-	36	20	8.5	2.5	19.5	162	141
160	00	3	150	186	173	108	144	268	44	126.5	38	141	193	127	5.4	-	36	20	8.5	2.5	19.5	162	141
160	0	4	192	242	173	136	172	268	44	136.5	45	174	229	140	5.4	-	50	20	8.5	2.5	19.5	162	141
250	1	5	253	313	173	180	240	345	65	146	81	185	251	162	6.4	-	60	32	11	2.5	19.5	195	166
400	2	6	271	337	173	192	258	355	65	149	86	200	260	172	6.4	-	66	50	11	3	20	205	175

FUSERBLOC
20 to 1250 A

Functions
Illustrations
References BS88
References NFC and DIN
Accessories
Enclosed fuse switches
Characteristics
Dimensions

Dimensions

Direct and external front or right side operation

- **BS88 - FUSERBLOC 630 A** (fuse size C1-C2)
  FUSERBLOC 800 A (fuse size C1-C2-C3)
- **NFC and DIN - FUSERBLOC 630 to 800 A** (fuse size 3)

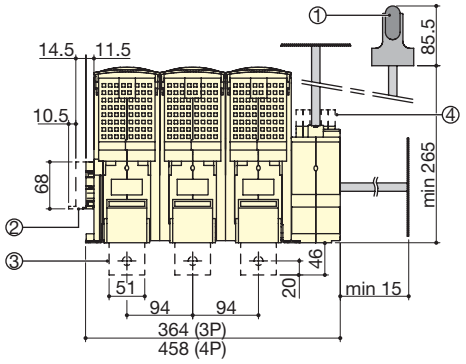

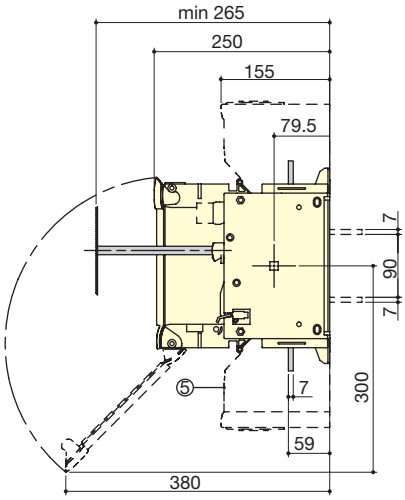

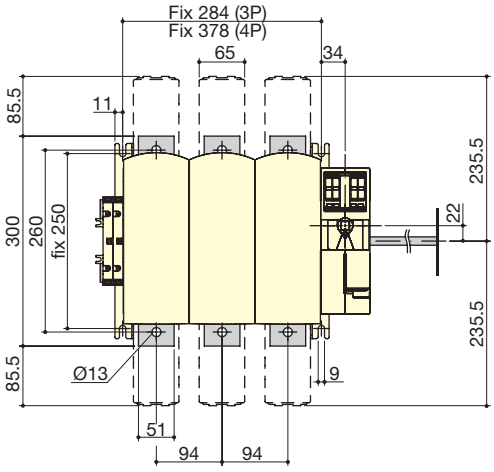

fuser_631_b

1. Direct operation
2. S type auxiliary contact NO + NC
3. Rear connection (option)
4. 1 to 8 pre-break auxiliary contact for signalisation
5. Terminal shrouds

- **Door drilling**

Direct operation

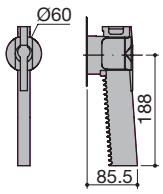

fuser_577_b_1_x_cat

External operation (S3 handle)

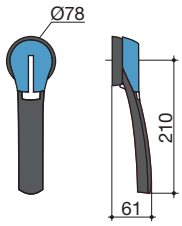

fuser_519_a

Front operation

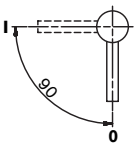

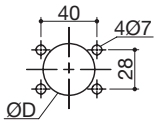

Conventional fixing (from rear): **D** = 31 to 37 mm.
Fast fixing (external, door closed): **D** = 37 mm.

Side operation

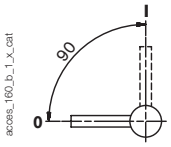

acces_160_b_1_x_cat

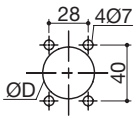

Conventional fixing (from rear): **D** = 31 to 37 mm.
Fast fixing (external, door closed): **D** = 37 mm.

This document is not a contract. SOCOMEC reserves the right to modify features without prior notice in view of continued improvement. 2008 - 2009

Dimensions

Direct and external front or right side operation

- **BS88 - FUSERBLOC 1250 A** (fuse size D1)
- **NFC and DIN - FUSERBLOC 800 to 1250 A** (fuse size 4)

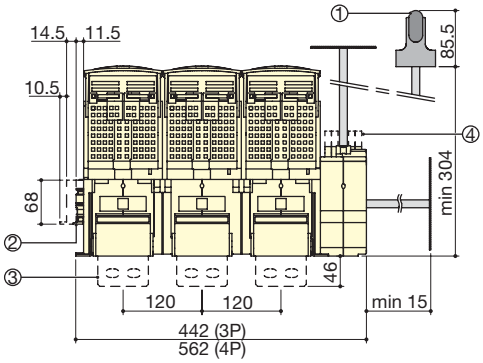

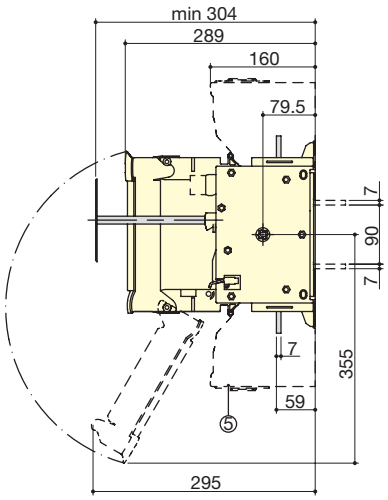

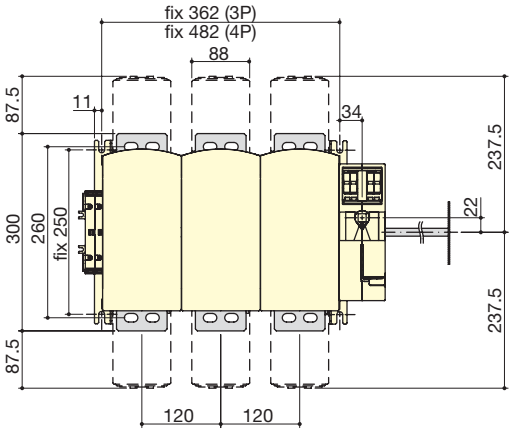

1. Direct operation
2. S type auxiliary contact NO + NC
3. Rear connection (option)
4. 1 to 8 pre-break auxiliary contact for signalisation
5. Terminal shrouds

- **Door drilling**

Right side operation (S3 handle)

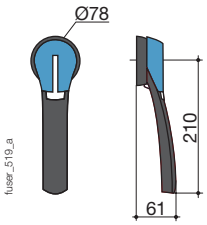

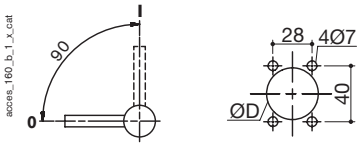

Conventional fixing (from rear): **D** = 31 to 37 mm.
Fast fixing (external, door closed): **D** = 37 mm.

Front operation (S4 handle)

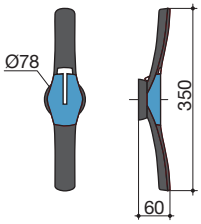

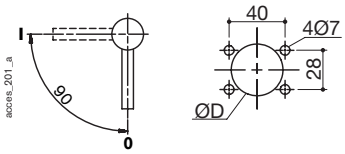

Conventional fixing (from rear): **D** = 31 to 37 mm.
Fast fixing (external, door closed): **D** = 37 mm.

Direct operation

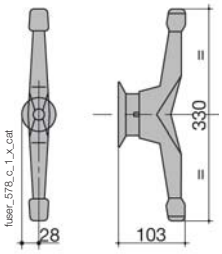

Connection terminals

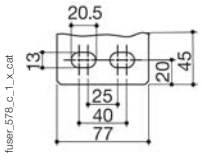

FUSERBLOC and high speed fuses (UR)

Functions
FUSERBLOC for 690 VAC UR cylindrical fuses
FUSERBLOC for DIN 43620 UR knife-edge fuses
FUSERBLOC V for UR fuses type BK/50
FUSERBLOC for UR fuses type K/110

fuser_284_a_1_cat

fuser_437_a_1_cat

fuser_439_a_1_cat

Functions

FUSERBLOC fuse combination switches combined with high speed fuses (UR) provide optimal breaking and making on load, safety isolation and protection of power semi-conductors.

Remarks

- These associations were determined following tests performed in our laboratory. Correct functioning of the FUSERBLOC unit and UR fuses is only guaranteed when these combinations are respected.
- For FUSERBLOC V, we recommend using threaded bolted tag fuses (type BK/50) in preference to knife-edge fuses (DIN 43620), so as to improve the power dissipation of the fuses.
- Consult us for any other combinations (1250 V UR fuses, notched fuses with 80 mm distance between centres, other sizes, etc.)
- For remote tripping devices: please consult us.
- To determine the UR fuses required, see page A.242 “High speed fuses (UR)”.

This document is not a contract. SOCOMEC reserves the right to modify features without prior notice in view of continued improvement. 2008 - 2009

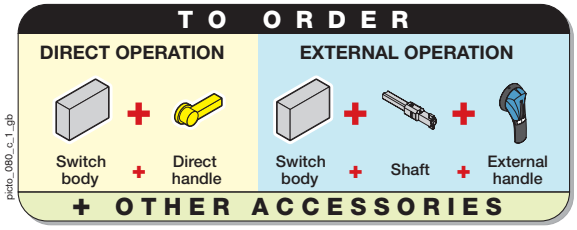

FUSERBLOC for 690 VAC UR cylindrical fuses

Characteristics

FUSERBLOC 50 A for fuse size 14 x 51

Fuse rating (A)	10	12	16	20	25	32	40	50
Max. I for the FUSERBLOC (A)	10	12	16	20	25	29	36	40

FUSERBLOC 125 A for fuse size 22 x 58

Fuse rating (A)	20	25	32	40	50	63	80	100
Max. I for the FUSERBLOC (A)	20	25	32	40	50	63	71	85

References

• Direct right side operation

fuser_227_a_2_cat

Rating (A) / Fuse** / Frame size	No. of poles	Switch body only	Direct handle	Auxiliary contact pre-break and signalisation
50 / 14x51 / 1	2 P	3615 **2005**	Black 3629 **7900**	1 contact NO/NC 3999 **0021**
	3 P	3615 **3005**		
	4 P	3615 **6005**		
125 / 22x58 / 3	2 P	3615 **2011**	Black 3629 **7901**	2 contacts NO/NC 3999 **0022**
	3 P	3615 **3011**		
	4 P	3615 **6011**		

*** For the fuses: see page A.242 "Fuses UR 10 to 2000 A".*

• External front or right side operation

fuser_557_a_2_cat

Rating (A) / Fuse** / Frame size	No. of poles	Switch body only	Door interlocked external front handle	Door interlocked external right-side handle	Shaft extensions for external handle	Auxiliary contact pre-break and signalisation
50 / 14x51 / 11	2 P	3831 **2005**	Black IP55 1411 **2111** Red IP65 1414 **2111**	Black IP55 1415 **2111** Red IP65 1418 **2111**	320 mm 1400 **1032**	1 contact NC 3999 **0701** 1 contact NO 3999 **0702**
	3 P	3831 **3005**				
	4 P	3831 **6005**				
125 / 22x58 / 13	2 P	3831 **2011**	Black IP55 1421 **2111** Red IP65 1424 **2111**	Black IP55 1425 **2111** Red IP65 1428 **2111**		
	3 P	3831 **3011**				
	4 P	3831 **6011**				

*** For the fuses : see page A.242 "Fuses UR 10 to 2000 A".*

Other accessories: see "FUSERBLOC" page A.158.

This document is not a contract. SOCOMEC reserves the right to modify features without prior notice in view of continued improvement. 2008 - 2009

FUSERBLOC and high speed fuses (UR)

Functions
FUSERBLOC for 690 VAC UR cylindrical fuses
FUSERBLOC for DIN 43620 UR knife-edge fuses
FUSERBLOC V for UR fuses type BK/50
FUSERBLOC for UR fuses type K/110

FUSERBLOC for DIN 43620 UR knife-edge fuses

Characteristics

FUSERBLOC 160 A for fuse size 000 and 00

Fuse rating (A)	10	16	20	25	32	40	50	63	80	100	125	160	200	250	315
Max. I for the FUSERBLOC (A)	10	16	20	25	32	32	37	44	51	92	105	121	140	140	140

FUSERBLOC 160 A for fuse size 0

Fuse rating (A)	16	20	25	32	40	50	63	80	100	125	160	200
Max. I for the FUSERBLOC (A)	16	20	25	32	32	37	44	51	92	105	121	140

FUSERBLOC 250 A for fuse size 1*

Fuse rating (A)	40	50	63	80	100	125	160	200	250	315	350	400
Max. I for the FUSERBLOC (A)	40	50	63	80	100	125	155	178	205	210	215	220

FUSERBLOC 400 A for fuse size 2

Fuse rating (A)	200	250	315	350	400	450	500	550	630	700
Max. I for the FUSERBLOC (A)	200	250	285	310	330	330	340	340	350	350

FUSERBLOC 630 A for fuse size 3

Fuse rating (A)	500	550	630	700	800	900	1000
I maxi pour le FUSERBLOC (A)	360	380	420	450	480	500	510

References

• **Direct right side operation**

fuser_231_a_2_cat

Rating (A) / Fuse** / Frame size	No. of poles	Switch body only	Direct handle	Auxiliary contact pre-break and signalisation	Fuse protection covers(1)
160 / 00 / 3	2 P	3615 **2015**	Black 3629 **7901**	1 contact NO/NC 3999 **0021** 2 contacts NO/NC 3999 **0022**	3990 **7015**
	3 P	3615 **3015**			3990 **8015**
	4 P	3615 **6015**			3990 **9015**
160 / 0 / 4	2 P	3615 **2016**			3990 **7016**
	3 P	3615 **3016**			3990 **8016**
	4 P	3615 **6016**			3990 **9016**
250 / 1 / 5	2 P	3615 **2024**			3990 **7024**
	3 P	3615 **3024**			3990 **8024**
	4 P	3615 **6024**			3990 **9024**
400 / 2 / 6	2 P	3615 **2039**			3990 **7039**
	3 P	3615 **3039**			3990 **8039**
	4 P	3615 **6039**			3990 **9039**
630 / 3 / 17	2 P	3811 **2063**	Black 3899 **6011**	1 contact NC 3999 **0701** 1 contact NO 3999 **0702**	-
	3 P	3811 **3063**			3890 **8063**
	4 P	3811 **6063**			3890 **9063**

*** For the fuses: see page A.242 "Fuses UR 10 to 2000 A".*
(1) Fuse protection covers for FUSERBLOC fitted with fuse blown microswitch (factory fitted). Customer fit options are available, see table on page A.203.

This document is not a contract. SOCOMEC reserves the right to modify features without prior notice in view of continued improvement. 2008 - 2009

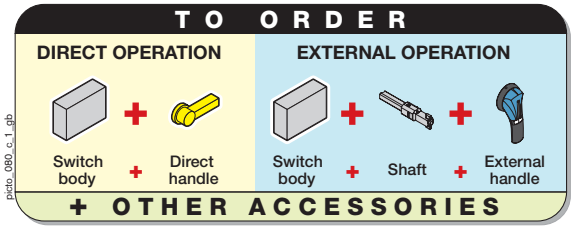

FUSERBLOC for DIN 43620 UR knife-edge fuses (continued)

References

• **External front or right side operation**

Rating (A) / Fuse** / Frame size	No. of poles	Switch body only	Door interlocked external front handle	Door interlocked external right-side handle	Shaft extensions for external handle	Auxiliary contact pre-break and signalisation	Fuse protection covers(1)
160 / 00 / 13	2 P	3831 **2015**	Black IP55 1421 **2111** Red IP65 1424 **2111**	Black IP55 1425 **2111** Red IP65 1428 **2111**	200 mm 1400 **1020** 320 mm 1400 **1032**	1 contact NC 3999 **0701** 1 contact N0 3999 **0702**	3990 **7015**
	3 P	3831 **3015**					3990 **8015**
	4 P	3831 **6015**					3990 **9015**
160 / 0 / 14	2 P	3831 **2016**					3990 **7016**
	3 P	3831 **3016**					3990 **8016**
	4 P	3831 **6016**					3990 **9016**
250 / 1 / 15	2 P	3831 **2024**					3990 **7024**
	3 P	3831 **3024**					3990 **8024**
	4 P	3831 **6024**					3990 **9024**
400 / 2 / 16	2 P	3831 **2039**					3990 **7039**
	3 P	3831 **3039**					3990 **8039**
	4 P	3831 **6039**					3990 **9039**
630 / 3 / 17	2 P	3811 **2063**	Black IP65 1433 **3111** Red IP65 1434 **3111**	Black IP65 1437 **3111** Red IP65 1438 **3111**	200 mm 1400 **1220** 320 mm 1400 **1232**		-
	3 P	3811 **3063**					3890 **8063**
	4 P	3811 **6063**					3890 **9063**

*** For the fuses: see page A.242 "Fuses UR 10 to 2000 A".*
(1) Fuse protection covers for FUSERBLOC fitted with fuse blown microswitch (factory fitted). Customer fit options are available, see table on page A.203.

Accessories

Fuse protection covers for FUSERBLOC fitted with fuse blown microswitch

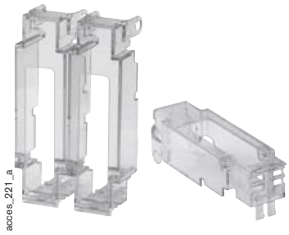

Use

Protection against direct contact with live parts situated in the fuse compartment for FUSERBLOC fitted with UR fuse blown microswitch.

References

Rating (A)	Fuses**	No. of poles	Accessories(1) References	Option(2) References
160	00	3 P	3999 **8015**	3990 **8015**
160	00	4 P	3999 **9015**	3990 **9015**
160	0	3 P	3999 **8016**	3990 **8016**
160	0	4 P	3999 **9016**	3990 **9016**
250	1	3 P	3999 **8024**	3990 **8024**
250	1	4 P	3999 **9024**	3990 **9024**
400	2	3 P	3999 **8039**	3990 **8039**
400	2	4 P	3999 **9039**	3990 **9039**
630	3	3 P	3899 **8063**	3890 **8063**
630	3	4 P	3899 **9063**	3890 **9063**

*** For the fuses: see page A.242 "Fuses UR 10 to 2000 A".*
(1) If ordered later (custumer fit option).
(2) If ordered at the same time as the standard device (factory fitted).

Other accessories: see "FUSERBLOC" page A.158.

This document is not a contract. SOCOMEC reserves the right to modify features without prior notice in view of continued improvement. 2008 - 2009

FUSERBLOC and high speed fuses (UR)

Functions
FUSERBLOC for 690 VAC UR cylindrical fuses
FUSERBLOC for DIN 43620 UR knife-edge fuses
FUSERBLOC V for UR fuses type BK/50
FUSERBLOC for UR fuses type K/110

FUSERBLOC V for UR fuses type BK/50

Characteristics

FUSERBLOC V 800 A for BK fuses size 2

Fuse rating (A)	400	450	500	550	630	700	800	900	1000	1100	1250
Max. I for the FUSERBLOC (A)	380	420	440	450	500	520	530	530	530	540	550

FUSERBLOC V 1250 A for BK fuses size 3

Fuse rating (A)	500	550	630	700	800	900	1000	1100	1250	1400	1500	1600	1800	2000
Max. I for the FUSERBLOC (A)	500	550	620	630	720	790	870	940	1050	1100	1100	1100	1100	1100

References

• **Front operation**

Rating (A) / Fuse**	No. of poles	Switch body only	Direct handle	Door interlocked external handle	Shaft extensions for external handle	Fuse protection covers(1)	Extension(2)	Auxiliary contact pre-break and signalisation	Terminal screens
800 / 2	3 P	3680 **3081**	Black 3999 **6012**	Black IP55 1431 **3411** Red IP55 1432 **3411**	200 mm 1401 **1520**	3990 **8080**	3612 **9963**	1st contact NO/NC 3999 **0051** 2nd contact NO/NC 3999 **0052**	3 P 3998 **3120** 4 P 3998 **4120**
	4 P	3680 **6081**				3990 **9080**			
1250 / 3	3 P	3680 **3121**				(3)	-		
	4 P	3680 **6121**							

*** For the fuses : see page A.242 "Fuses UR 10 to 2000 A".*
(1) Fuse protection covers for FUSERBLOC fitted with fuse blown microswitch (factory fitted). Customer fit options are available, see table on page A.205.
(2) Extension for FUSERBLOC fitted with fuse blown microswitch for the direct front operation.
(3) The fuse blown auxiliary contacts should be placed under the UR fuses.

• **Side operation**

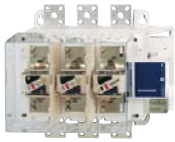
fuser_646_a_2_cat

Rating (A) / Fuse**	No. of poles	Switch body only	Direct handle	Door interlocked external handle	Shaft extensions for external handle	Fuse protection covers(1)	Auxiliary contact pre-break and signalisation	Terminal screens
800 / 2	3 P	3685 **3081**	Black 3999 **6012**	Black IP55 1435 **3411**	200 mm 1401 **1520**	3990 **8080**	1st contact NO/NC 3999 **0051** 2nd contact NO/NC 3999 **0052**	3 P 3998 **3120** 4 P 3998 **4120**
	4 P	3685 **6081**				3990 **9080**		
1250 / 3	3 P	3685 **3121**				(2)		
	4 P	3685 **6121**						

*** For the fuses : see page A.242 "Fuses UR 10 to 2000 A".*
(1) Fuse protection covers for FUSERBLOC fitted with fuse blown microswitch (factory fitted). Customer fit options are available, see table on page A.205.
(2) The fuse blown auxiliary contacts should be placed under the UR fuses.

This document is not a contract. SOCOMEC reserves the right to modify features without prior notice in view of continued improvement. 2008 - 2009

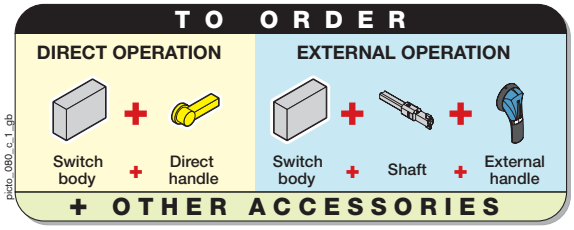

Accessories

Direct handle

Reference

Rating (A)	Handle colour	Reference
800 … 1250	Black	3999 **6012**

Door interlocked external handle

References

For front operation

Rating (A)	Handle type	Handle colour	External IP	References
800 ... 1250	S3	Black	IP55	1431 **3411**
800 ... 1250	S3	Red / Yellow	IP55	1432 **3411**

For side operation

Rating (A)	Handle type	Handle colour	External IP	Reference
800 ... 1250	S3	Black	IP55	1435 **3411**

Shaft extensions for external front and side handle

Use

Standard lenghts: 200 mm.
Other lengths: please consult us.

Reference

Rating (A)	Dimension X (mm)	Dimension Y (mm)	Shaft length (mm)	Reference
800 ... 1250	457 … 621	105 … 275	200	1401 **1520**

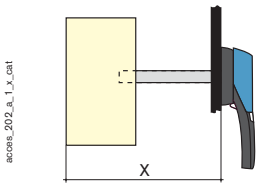

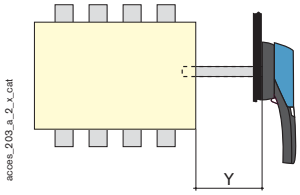

Fuse protection covers for FUSERBLOC fitted with fuse blown microswitch

Use

Protection against direct contact with live parts situated in the fuse compartment for FUSERBLOC fitted with UR fuse blown microswitch.

References

Rating (A)	No. of poles	**Accessories**(1) References	**Option**(2) References
800	3 P	3999 **8080**	3990 **8080**
800	4 P	3999 **9080**	3990 **9080**

(1) If ordered later (customer fit option).
(2) If ordered at the same time as the standard device (factory fitted).

Extension for FUSERBLOC fitted with fuse blown microswitch

Use

Necessary for the direct front operation FUSERBLOC when using UR fuse blown microswitch.

Reference

Rating (A)	Reference
800	3612 **9963**

Other accessories: see "FUSERBLOC" page A.158.

This document is not a contract. SOCOMEC reserves the right to modify features without prior notice in view of continued improvement. 2008 - 2009

FUSERBLOC and high speed fuses (UR)

Functions
FUSERBLOC for 690 VAC UR cylindrical fuses
FUSERBLOC for DIN 43620 UR knife-edge fuses
FUSERBLOC V for UR fuses type BK/50
FUSERBLOC for UR fuses type K/110

FUSERBLOC for UR fuses type K/110

Characteristics (690 VAC)[1]

FUSERBLOC 250 A for fuse size 1*

Fuse rating (A)	40	50	63	80	100	125	160	200	250	315	350	400	450	500	550	630
Max. I for the FUSERBLOC (A)	40	50	63	80	100	120	140	165	195	215	230	240	240	240	240	240

FUSERBLOC 400 A for fuse size 1

Fuse rating (A)	200	250	315	350	400	450	500	550	630	700	800	900
Max. I for the FUSERBLOC (A)	145	165	200	220	240	265	290	310	340	370	395	395

FUSERBLOC 500 A for fuse size 2

Fuse rating (A)	400	450	500	550	630	700
Max. I for the FUSERBLOC (A)	320	345	370	390	425	460

FUSERBLOC 630 A for fuse size 2

Fuse rating (A)	800	900	1000	1100	1250
Max. I for the FUSERBLOC (A)	495	545	590	610	620

FUSERBLOC 800 A for fuse size 3

Fuse rating (A)	500	550	630	700	800	900	1000	1100	1250	1400	1500	1600	1800	2000
Max. I for the FUSERBLOC (A)	370	395	440	480	535	590	645	695	800	800	800	800	800	800

FUSERBLOC 1250 A for fuse size 3: please consult us.

(1) For UR fuses type K/110 1250 VAC, please consult us.

References

• Direct front or right-side operation

Rating (A) / Fuse**	No. of poles	Switch body only	Direct right-side handle	Direct front handle	Fuse protection covers[1]	Auxiliary contact pre-break and signalisation	Terminal screens
250 / 1*	2 P	36U1 **2024**	Black 3629 **7901**	-	2 P 3990 **2839**	1 contact NO/NC 3999 **0021**	2 P 3998 **2025**
	3 P	36U1 **3024**			3 P 3990 **3839**		3 P 3998 **3025**
400 / 1	2 P	36U1 **2039**					
	3 P	36U1 **3039**					
500 / 2	2 P	38U1 **2050**	Black 1437 **7911**	Black 3899 **6011**	2 P 3890 **2U63**	1 contact NC 3999 **0701**	2 P 3898 **2080**
	3 P	38U1 **3050**			3 P 3890 **3U63**	1 contact NO 3999 **0702**	3 P 3898 **3080**
630 / 2	2 P	38U1 **2063**					
	3 P	38U1 **3063**					
800 / 3	2 P	38U1 **2080**					
	3 P	38U1 **3080**					
1250 / 3	2 P	38U1 **2120**		Black 3899 **7011**	3890 **2U12**		3898 **2120**
	3 P	38U1 **3120**			3890 **3U12**		3898 **3120**

*** For the fuses: see page A.242 "Fuses UR 10 to 2000 A".*
(1) Fuse protection covers for FUSERBLOC fitted with fuse blown microswitch (factory fitted). Customer fit options are available, see table on page A.207.

This document is not a contract. SOCOMEC reserves the right to modify features without prior notice in view of continued improvement. 2008 - 2009

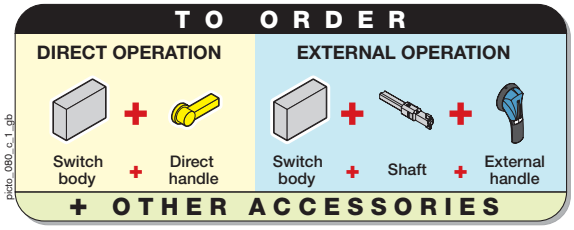

FUSERBLOC for UR fuses type K/110 (continued)

References

• **External front or right-side operation**

Rating (A)/ Fuse**	No. of poles	Switch body only	Door interlocked external front handle	Door interlocked external right-side handle	Shaft extensions for external handle	Fuse protection covers(1)	Auxiliary contact pre-break and signalisation	Terminal screens
250/ 1*	2 P	38U1 **2024**	Black IP55 1421 **2111** Red IP65 1424 **2111**	Black IP55 1425 **2111** Red IP65 1428 **2111**	320 mm 1400 **1032**	2 P 3990 **2839** 3 P 3990 **3839**	1 contact NC 3999 **0701** 1 contact NO 3999 **0702**	2 P 3998 **2025** 3 P 3998 **3025**
	3 P	38U1 **3024**						
400/ 1	2 P	38U1 **2039**						
	3 P	38U1 **3039**						
500/ 2	2 P	38U1 **2050**	Black IP65 1433 **3111** Red IP65 1434 **3111**	Black IP65 1437 **3111** Red IP65 1438 **3111**	320 mm 1400 **1232**	2 P 3890 **2U63** 3 P 3890 **3U63**		2 P 3898 **2080** 3 P 3898 **3080**
	3 P	38U1 **3050**						
630/ 2	2 P	38U1 **2063**						
	3 P	38U1 **3063**						
800/ 3	2 P	38U1 **2080**						
	3 P	38U1 **3080**						
1250/ 3	2 P	38U1 **2120**	Black IP65 1443 **3111**			3890 **2U12**		3898 **2120**
	3 P	38U1 **3120**	Red IP65 1444 **3111**			3890 **3U12**		3898 **3120**

*** For the fuses: see page A.242 "Fuses UR 10 to 2000 A".*
(1) Fuse protection covers for FUSERBLOC fitted with fuse blown microswitch (factory fitted). Customer fit options are available, see table on page A.207.

Accessories

Fuse protection covers for FUSERBLOC fitted with fuse blown microswitch

Use

Protection against direct contact with live parts situated in the fuse compartment for FUSERBLOC fitted with UR fuse blown microswitch.

References

Rating (A)	Fuses**	No. of poles	Accessories(1) References	Option(2) References
250 … 400	1* / 1	2 P	3999 **2839**	3990 **2839**
250 … 400	1* / 1	3 P	3999 **3839**	3990 **3839**
500 … 800	2 / 3	2 P	3899 **2U63**	3890 **2U63**
500 … 800	2 / 3	3 P	3899 **3U63**	3890 **3U63**
1250	3	2 P	3899 **2U12**	3890 **2U12**
1250	3	3 P	3899 **3U12**	3890 **3U12**

*** For the fuses: see page A.242 "Fuses UR 10 to 2000 A".*
(1) If ordered later (customer fit option).
(2) If ordered at the same time as the standard device (factory fitted).

Other accessories: see "FUSERBLOC" page A.158.

This document is not a contract. SOCOMEC reserves the right to modify features without prior notice in view of continued improvement. 2008 - 2009

FUSOMAT
250 to 1250 A

- Functions
- References BS88
- References NFC/DIN
- Accessories
- Characteristics
- Dimensions

fusom_063_a_1_cat

Functions

FUSOMAT are manually controlled tri- or tetrapolar fuse combination switches.
They provide breaking or switch off on load, safety isolation and protection against overcurrents for any low voltage electrical circuit.
They can be tripped remotely.
They can automatically disconnect a circuit in combination with:
- fuse blown indication device,
- earth leakage relay,
- DIRIS protection relay,
- other protective devices.

Conformity to standards

- IEC 60947-3
- EN 60947-3
- VDE 0660-107
- NBN EN 60947-3
- BS88

General characteristics

- Remote disconnection by tripping coil.
- Fully visible breaking.
- Double breaking by phase (top - bottom of the fuse) up to 630 A (NFC/DIN) and 800 A (BS88).
- Visible breaking up to 630 A (NFC/DIN) and 800 A (BS88).
- Protection against overcurrents by fuse links (gG, aM) with high breaking capacity (100 kA eff.).

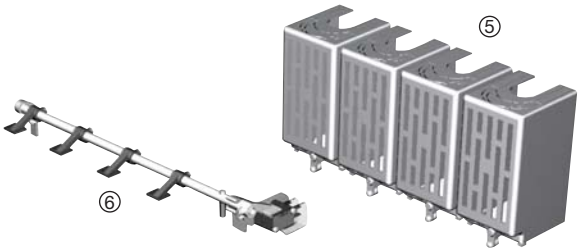

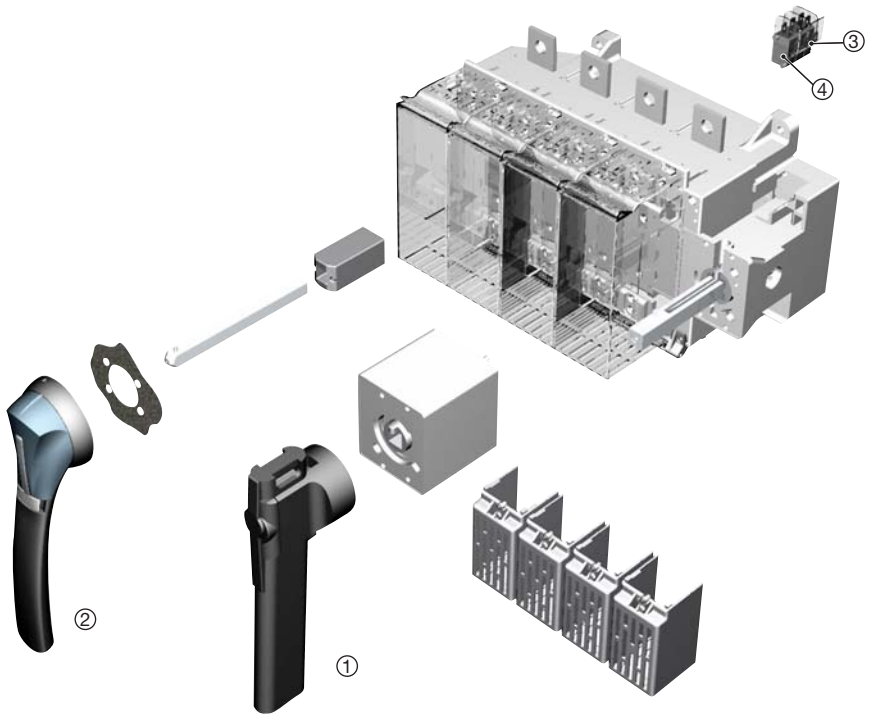

fusom_060_b_1_x_cat

Overview (for further details, please see the installation instructions supplied with each device).

1. Direct front handle
2. Door interlocked external front handle
3. NO/NC position auxiliary contacts
4. NO/NC auxiliary contacts linked to factory-mounted shunt trip coil
5. Terminal shrouds
6. Fuse blown indication device

This document is not a contract. SOCOMEC reserves the right to modify features without prior notice in view of continued improvement. 2008 - 2009

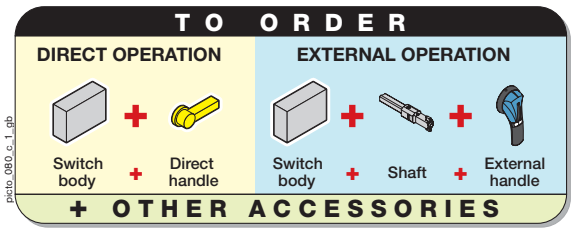

References

BS88 - Front operation switch with a shunt trip coil 230 VAC

Rating (A) / Fuse**	No. of poles	Switch body only	Direct handle	Door interlocked external handle	Shaft extensions for external handle	AC position	AC tripping	Terminal shrouds(1)	Terminal screens(2)	Phase barrier shield
250 / B1-B2-B3	3 P	3660 **3026**	Black* 3999 **6201**	S3 type Black IP55* 1431 **3511** Red IP55 1432 **3511**	200 mm 1401 **1520** 320 mm* 1401 **1532**	1st contact NO/NC 3999 **0051** 2nd contact NO/NC 3999 **0052**	1 contact NO/NC 3999 **0031**	3 P 3998 **3040**	/	/
	4 P	3660 **6026**						4 P 3998 **4040**		
400 / B1-B2-B3-B4	3 P	3660 **3041**								
	4 P	3660 **6041**								
630 / C1-C2	3 P	3660 **3064**						3998 **3063**		
	4 P	3660 **6064**						3998 **4063**		
800 / C1-C2-C3	3 P	3660 **3080**	Black* 3999 **6012**					/	3 P 3998 **3120**	3 P 2998 **0003**
	4 P	3660 **6080**								
1250 / D1	3 P	3660 **3121**							4 P 3998 **4120**	4 P 2998 **0004**
	4 P	3660 **6121**								

** Standard.*
*** For the fuses: see page A.224 "BS88 industrial fuselinks 2 to 1250 A".*
(1) Top / bottom.
(2) 1 set top (bottom protection as standard).

BS88 - Side operation switch with a shunt trip coil 230 VAC

Rating (A) / Fuse**	No. of poles	Switch body only	Direct handle	Door interlocked external handle	Shaft extensions for external handle	AC position	AC tripping	Terminal shrouds(1)	Terminal screens(2)	Phase barrier shield
250 / B1-B2-B3	3 P	3665 **3026**	Black* 3999 **6012**	S3 type Black IP55* 1435 **3511** Red IP55 1436 **3511**	200 mm 1403 **1520**	1st contact NO/NC 3999 **0051** 2nd contact NO/NC 3999 **0052**	1 contact NO/NC 3999 **0031**	3 P 3998 **3040**	/	/
	4 P	3665 **6026**						4 P 3998 **4040**		
400 / B1-B2-B3-B4	3 P	3665 **3041**								
	4 P	3665 **6041**								
630 / C1-C2	3 P	3665 **3064**						3998 **3063**		
	4 P	3665 **6064**						3998 **4063**		
800 / C1-C2-C3	3 P	3665 **3080**						/	3 P 3998 **3120**	3 P 2998 **0003**
	4 P	3665 **6080**								
1250 / D1	3 P	3665 **3121**							4 P 3998 **4120**	4 P 2998 **0004**
	4 P	3665 **6121**								

** Standard.*
*** For the fuses: see page A.224 "BS88 industrial fuselinks 2 to 1250 A".*
(1) Top / bottom.
(2) 1 set top (bottom protection as standard).

For more informations : see "Accessories" pages.

This document is not a contract. SOCOMEC reserves the right to modify features without prior notice in view of continued improvement. 2008 - 2009

FUSOMAT
250 to 1250 A

Functions
References BS88
▶ References NFC/DIN
▶ Accessories
Characteristics
Dimensions

References

▶ NFC and DIN - Front operation switch with a shunt trip coil 230 VAC

Rating (A) / Fuse**	No. of poles	Switch body only	Direct handle	Door interlocked external handle	Shaft extensions for external handle	AC position	AC tripping	1st AC fuse blown indications	Terminal shrouds(1)	Terminal screens(2)	Phase barrier shield
250 / 1	3 P	3650 **3026**	Black* 3999 **6201**	S3 type Black IP55* 1431 **3511** Red IP55 1432 **3511**	200 mm 1401 **1520** 320 mm* 1401 **1532**	1st contact NO/NC 3999 **0051** 2nd contact NO/NC 3999 **0052**	1 contact NO/NC 3999 **0031**	3 P 3994 **1304**	3 P 3998 **3040**	/	/
	4 P	3650 **6026**									
400 / 2	3 P	3650 **3041**						4 P 3994 **1404**	4 P 3998 **4040**		
	4 P	3650 **6041**									
630 / 3	3 P	3650 **3064**						3994 **1306**	3998 **3063**		
	4 P	3650 **6064**						3994 **1406**	3998 **4063**		
800 / 4	3 P	3650 **3080**	Black* 3999 **6012**					3 P 3994 **1312**	/	3 P 3998 **3120**	3 P 2998 **0003**
	4 P	3650 **6080**									
1250 / 4	3 P	3650 **3121**						4 P 3994 **1412**		4 P 3998 **4120**	4 P 2998 **0004**
	4 P	3650 **6121**									

** Standard.*
*** For the fuses: see page A.232 "NFC-DIN industrial fuselinks 0.16 to 1250 A".*
(1) Top / bottom.
(2) 1 set top (bottom protection as standard).

▶ NFC and DIN - Side operation switch with a shunt trip coil 230 VAC

Rating (A) / Fuse**	No. of poles	Switch body only	Direct handle	Door interlocked external handle	Shaft extensions for external handle	AC position	AC tripping	1st AC fuse blown indications	Terminal shrouds(1)	Terminal screens(2)	Phase barrier shield
250 / 1	3 P	3655 **3026**	Black* 3999 **6012**	S3 type Black IP55* 1435 **3511** Red IP55 1436 **3511**	200 mm 1403 **1520**	1st contact NO/NC 3999 **0051** 2nd contact NO/NC 3999 **0052**	1 contact NO/NC 3999 **0031**	3 P 3994 **1304**	3 P 3998 **3040**	/	/
	4 P	3655 **6026**									
400 / 2	3 P	3655 **3041**						4 P 3994 **1404**	4 P 3998 **4040**		
	4 P	3655 **6041**									
630 / 3	3 P	3655 **3064**						3994 **1306**	3998 **3063**		
	4 P	3655 **6064**						3994 **1406**	3998 **4063**		
800 / 4	3 P	3655 **3080**						3 P 3994 **1312**	/	3 P 3998 **3120**	3 P 2998 **0003**
	4 P	3655 **6080**									
1250 / 4	3 P	3655 **3121**						4 P 3994 **1412**		4 P 3998 **4120**	4 P 2998 **0004**
	4 P	3655 **6121**									

** Standard.*
*** For the fuses: see page A.232 "NFC-DIN industrial fuselinks 0.16 to 1250 A".*
(1) Top / bottom.
(2) 1 set top (bottom protection as standard).

For more informations: see "Accessories" pages.

This document is not a contract. SOCOMEC reserves the right to modify features without prior notice in view of continued improvement. 2008 - 2009

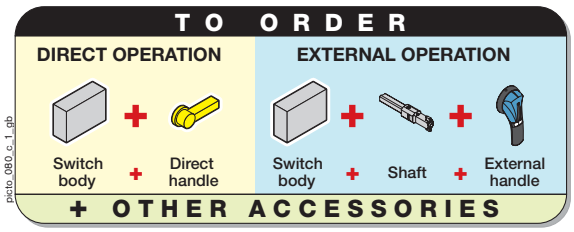

Accessories

Direct handle

acces_156_a_2_cat

References

For front operation

Rating (A)	Handle colour	References
250 … 630	Black	3999 **6201**
800 … 1250	Black	3999 **6012**
250 … 1250	Red	consult us

For side operation

Rating (A)	Handle colour	References
250 … 1250	Black	3999 **6012**
250 … 1250	Red	3999 **6013**

Door interlocked external handle

acces_151_a_1_cat

acces_166_a_2_cat

S3 handle

References

For front operation

Rating (A)	Handle colour	External IP	References
250 … 1250	Black	IP55	1431 **3511**
250 … 1250	Red	IP55	1432 **3511**

For side operation

Rating (A)	Handle colour	External IP	References
250 … 1250	Black	IP55	1435 **3511**
250 … 1250	Red	IP55	1436 **3511**

Alternative S-type handle cover colours

acces_198_a_1_cat

Use

For single lever handles type S3.
Other colours: please consult us.

References

Handle colour	Pack qty	References
Light grey	50	1401 **0001**
Dark grey	50	1401 **0011**

Shaft extensions for external handle

acces_144_b_1_cat

Use

Standard length:
- 200 mm,
- 320 mm.

Other lengths: please consult us.

References

For front operation

Rating (A)	Dimension X (mm)	Shaft length (mm)	Type	References
250 … 400	300 … 422	200	15 x 12	1401 **1520**
250 … 400	300 … 542	320	15 x 12	1401 **1532**
630 … 1250	345 … 467	200	15 x 12	1401 **1520**
630 … 1250	345 … 587	320	15 x 12	1401 **1532**

For side operation

Rating (A)	Dimension Y (mm)	Shaft length (mm)	Type	Reference
250 … 1250	78 … 200	200	15 x 12	1403 **1520**

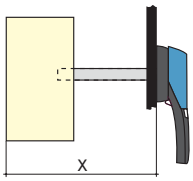

acces_202_a_1_cat

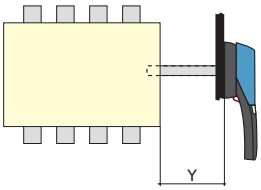

acces_203_a_1_x_cat

This document is not a contract. SOCOMEC reserves the right to modify features without prior notice in view of continued improvement. 2008 - 2009

Functions
References BS88
References NFC/DIN
Accessories
Characteristics
Dimensions

Accessories

Alternative coils

acces_049_a_1_cat

Shunt trip coil

acces_050_a_1_cat

Undervoltage trip coil

Use

Omnipolar breaking remotely controlled by shunt trip or undervoltage voltage release coil.

NB: the shunt trip coil must not be supplied for more than 5 s.

A shunt trip coil is fitted to the standard switch body.

To modify this coil, the reference opposite must be added to the switch reference.

Must be ordered at the same time as the switch.

Examples for ordering:

- FUSOMAT with shunt trip coil 230 VAC - 1 reference: FUSOMAT 250 A, 3 pole, front operation: 3650 **3026**.
- FUSOMAT fitted with a non standard coil - 2 references: FUSOMAT 250 A, 3 pole, front operation, fitted with a 110 VAC undervoltage trip coil: 3650 **3026** + 3991 **3110**.

References

Shunt trip coil

Voltage	Replacement tripping coil References	Original coil(1) References
24 VAC	3990 **1024**	3991 **1024**
48 VAC	3990 **1048**	3991 **1048**
110 VAC	3990 **1110**	3991 **1110**
230 VAC	3990 **1220**	standard
400 VAC	3990 **1380**	3991 **1380**
12 VDC	3990 **2012**	3991 **2012**
24 VDC	3990 **2024**	3991 **2024**
48 VDC	3990 **2048**	3991 **2048**
110 VDC	3990 **2220**	3991 **2220**
220 VDC	3990 **2220**	3991 **2220**

Undervoltage trip coil

Voltage	References	References
24 VAC	3990 **3024**	3991 **3024**
48 VAC	3990 **3048**	3991 **3048**
110 VAC	3990 **3110**	3991 **3110**
230 VAC	3990 **3220**	3991 **3220**
400 VAC	3990 **3380**	3991 **3380**
12 VDC	3990 **4012**	3991 **4012**
24 VDC	3990 **4024**	3991 **4024**
48 VDC	3990 **4048**	3991 **4048**
110 VDC	3990 **4110**	3991 **4110**
220 VDC	3990 **4220**	3991 **4220**

Undervoltage delayed trip coil

Voltage	References
230 VAC	3992 **3230**
400 VAC	3992 **3400**

(1) To be ordered at same time as switch.

Characteristics: see page A.65 "SIDERMAT".

Current-reducing resistance for undervoltage release coil

Use

Reduces, by limiting the current, the effects on undervoltage coils used in continuous processes or exposed to high ambient temperatures.

References

Voltage	References
110 VAC	3999 **3112**
230 VAC	3999 **3230**
400 VAC	3999 **3400**
110 VDC	3999 **4110**

This document is not a contract. SOCOMEC reserves the right to modify features without prior notice in view of continued improvement. 2008 - 2009

Accessories

Auxiliary contacts

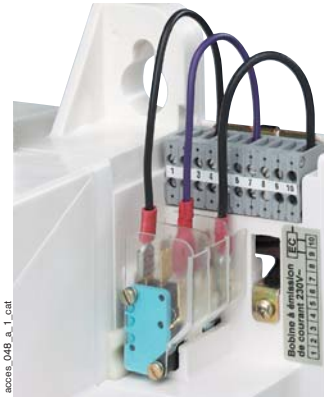

acces_048_a_1.cat

Use
Signalling of positions 0 and I:
1 to 2 NC/NO auxiliary contacts.
Coil tripping
1 to 2 NC/NO auxiliary contacts.
Connection to the control circuit
By fast-on terminal 6.35 mm.
Characteristics
NC/NO auxiliary contact IP2.
Electrical characteristics
30 000 operations.

References

NC / NO position contact

Rating (A)	No. of AC	References
250 … 1250	1st	3999 **0051**
250 … 1250	2nd	3999 **0052**
630 … 1250	3rd and more	consult us

NC / NO low level position contact

Rating (A)	No. of AC	References
250 … 1250	1st	3999 **0111**
250 … 1250	2nd	3999 **0112**

NC / NO coil tripping contact

Rating (A)	No. of AC	Reference
250 … 1250	1	3999 **0031**

Characteristics

NC / NO changeover position contact

Rating (A)	Nominal current (A)	Operating current I_e (A) 250 VAC AC-13	400 VAC AC-13	24 VDC DC-13	48 VDC DC-13
250 … 1250	16	12	8	14	6

NC / NO changeover coil tripping contact

Rating (A)	Nominal current (A)	Operating current I_e (A) 250 VAC AC-13	400 VAC AC-13	24 VDC DC-13	48 VDC DC-13
250 … 1250	16	12	8	12	2

DIN fuse blown indication

Use
For DIN fuses cartridges with striker.
Electrical principle
A NC / NO auxiliary contacts detects that the fuse has blown.
Connection to the control circuit
By fast-on terminal 6.35 mm.
Electrical characteristics
30 000 operations.

References

NC / NO changeover

Rating (A)	No. of poles	No. of AC	References
250 … 400	3 P	1st	3994 **1304**
250 … 400	4 P	1st	3994 **1404**
630	3 P	1st	3994 **1306**
630	4 P	1st	3994 **1406**
800 … 1250	3 P	1st	3994 **1312**
800 … 1250	4 P	1st	3994 **1412**
250 … 1250	3/4 P	2nd	3994 **1902**

Characteristics

Rating (A)	Nominal current (A)	Operating current I_e (A) 250 VAC AC-13	400 VAC AC-13	24 VDC DC-13	48 VDC DC-13
250 … 1250	16	12	8	12	2

This document is not a contract. SOCOMEC reserves the right to modify features without prior notice in view of continued improvement. 2008 - 2009

Functions
References BS88
References NFC/DIN
Accessories
Characteristics
Dimensions

Accessories

Terminal shrouds

acoss_213_b_1_cat

Use
Top or bottom protection against direct contact with the terminals or the connection parts.

Advantage
Holes allowing remote thermographic inspection without removing.
Note: 1 shroud required per side (max 2).

References

Rating (A)	No. of poles	Position	References
250 … 400	3 P	top / bottom	3998 **3040**
250 … 400	4 P	top / bottom	3998 **4040**
630	3 P	top / bottom	3998 **3063**
630	4 P	top / bottom	3998 **4063**

Terminal screens

fusom_059_a_1_cat

Use
Top protection against direct contacts with the terminals or the connection parts.
Bottom protection as standard.

References

Rating (A)	No. of poles	Position	References
800 … 1250	3 P	top	3998 **3120**
800 … 1250	4 P	top	3998 **4120**
800 … 1250	3/4 P	bottom	standard

Phase barrier shield

acos_036_a_1_cat

Use
Safety isolation between the terminals, indispensable when using at 690 VAC or in a polluted atmosphere.

References

Rating (A)	No. of poles	References
800 … 1250	3 P	2998 **0003**
800 … 1250	4 P	2998 **0004**

Cage terminals

acos_053_a_1_cat

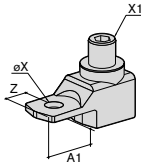

acos_091_a_1_x_cat

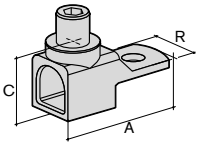

acos_092_a_1_x_cat

Use
Connection of bare copper cables to the terminals (without lugs).

References

Rating (A)	No. of poles	References
250	3 P	5400 **3025**
250	4 P	5400 **4025**
400	3 P	5400 **3040**
400	4 P	5400 **4040**
630	3 P	5400 **3063**
630	4 P	5400 **4063**

Connection

Rating (A)	Section flexible cable (mm²)	Section rigid cable (mm²)	Width flexible bar (mm)	Stripped over (mm)
250	16 … 185	16 … 185	18	27
400	50 … 240	50 … 300	20	34
630	70 … 300	70 … 300	24	34

Dimensions

Rating (A)	A	A1	C	R	ØX	X1	Z
250	62	31.5	31.5	25	10.5	M16	14
400	71.5	32	38	32	10.5	M20	15
630	76.5	37	38	40	12.5	M20	15

This document is not a contract. SOCOMEC reserves the right to modify features without prior notice in view of continued improvement. 2008 - 2009

Accessories

Handle key interlocking accessories

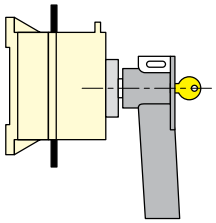

acces_010_b_1_x_cat

RONIS 1104 A lock

Use

Locking in position 0 of front operation:

- using padlock (not supplied) and factory integrated into the handle,
- using RONIS 1104 A lock (key BC 3318) to be mounted directly on the lockable handle,
- using RONIS EL11AP lock (not supplied),
- using CASTELL K lock (not supplied).

References

Locking using RONIS 1104 A lock (included)

Rating (A)	Operation	Reference
250 … 1250	direct front	3999 **8104**

Locking using RONIS EL11AP lock (not included)

Rating (A)	Operation	Reference
250 … 1250	external	1499 **7701**

Locking using CASTELL K lock (not included)

Rating (A)	Operation	Reference
250 … 1250	external	1499 **7702**

Label holder

acces_044_a_1_cat

Use

Recognisable self-adhesive label allowing identification of the devices.

Reference

Dimensions L x H (mm)	Pack qty	Reference
18 x 13	50	7769 **9999**

Other specific accessories

bd_03_04_01

Use

- Specific shields (dimensions, or for high ambient temperatures).
- Connection accessories.
- Mounting plates for standard systems.
- Special construction available for specific environments.

This document is not a contract. SOCOMEC reserves the right to modify features without prior notice in view of continued improvement. 2008 - 2009

FUSOMAT
250 to 1250 A

Functions
References BS88
References NFC/DIN
Accessories
Characteristics
Dimensions

Characteristics (according to IEC 60947-3)

Thermal current I_{th} (40°C)		250 A	400 A	630 A	800 A	1250 A
BS88 fuse size		B1-B2-B3	B1-B2-B3-B4	C1-C2	C1-C2-C3	D1
NFC/DIN fuse size		1	2	3	4	4
Rated insulation voltage U_i (V)		1 000	1 000	1 000	1 000	1 000
Rated impulse withstand voltage U_{imp} (kV)		12	12	12	12	12
Rated operational currents I_e (A)						
Rated voltage	Load duty category	A/B(1)	A/B(1)	A/B(1)	A/B(1)	A/B(1)
400 VAC	AC-21 A / AC-21 B	250/250	400/400	630/630	800/800	1250/1250
	AC-22 A / AC-22 B	250/250	400/400	630/630	800/800	1250/1250
	AC-23 A / AC-23 B	250/250	400/400	630/630	800/800	1000/1000
690 VAC(2)	AC-21 A / AC-21 B	200/200	315/400	500/630	800/800	800/1250
	AC-22 A / AC-22 B	200/200	315/400	500/630	800/800	800/1000
	AC-23 A / AC-23 B	200/200	250/315	315/400	630/630	630/630
220 VDC	DC-21 A / DC-21 B	200/200	315/315	400/630	800/800	800/1250
	DC-22 A / DC-22 B	200/200	315/315	315/630	800/800	800/1250
	DC-23 A / DC-23 B	200/200	200/315	400/630	800/800	800/1000
440 VDC	DC-21 A / DC-21 B	200/200	315/315	400/630(3)	800(4)/800(4)	800(4)/1250(4)
	DC-22 A / DC-22 B	200/200	315(3)/315(3)	315/630(3)	800(4)/800(4)	800(4)/1250(4)
	DC-23 A / DC-23 B	200/200	200(3)/315(3)	400(3)/630(3)	800(4)/800(4)	800(4)/1000(4)
Operational power in AC-23 (kW)(1)(5)						
At 400 VAC without pre-break AC		132 / 132	220 / 220	355 / 355	450 / 450	560 / 560
At 690 VAC without pre-break AC		185 / 185	220 / 295	295 / 400	400 / 400	600 / 600
Reactive power (kvar)(5)						
At 400 VAC		115	185	290	365	575
Fuse protected short-circuit characteristics BS88 / NFC-DIN(6)						
Prospective short-circuit current (kA rms)		80 / 100	80 / 100	80 / 100	80 / 100	80 / 100
Associated fuse rating (A)		250	400	630	800	1250
Overload capacity (6)						
Rated peak withstand current (kA peak)		30	45	60	80	80
Connection						
Minimum Cu cable section (mm²)		95	185	2 x 150	-	-
Minimum Cu busbar section (mm²)		-	-	2 x 30 x 5	2 x 60 x 5	2 x 60 x 5
Maximum Cu cable section (mm²)		240	240	2 x 300	4 x 185	4 x 185
Maximum Cu busbar width (mm)		40	40	50	100	100
Min. tightening torque (Nm)		20	20	40	-	20
Mechanical characteristics						
Endurance (number of operating cycles)		8 000	8 000	5 000	5 000	5 000
Weight of 3 P switch (kg)		7	8	16	28	28
Weight of 4 P switch (kg)		8.5	9.5	19	33	33

(1) Category with index A = frequent operation - Category with index B = infrequent operation.
(2) With terminal shrouds or phase barrier.
(3) Poles cannot be juxtaposed.
(4) 4-pole device with 2 pole in series by polarity.
(5) The power value is given for information only, the current values vary from one manufacturer to another.
(6) For a rated operating voltage U_e = 400 VAC.

This document is not a contract. SOCOMEC reserves the right to modify features without prior notice in view of continued improvement. 2008 - 2009

Dimensions

Front operation

- **BS88 - FUSOMAT 250 to 800 A**
  NFC and DIN - FUSOMAT 250 to 630 A

Direct operation

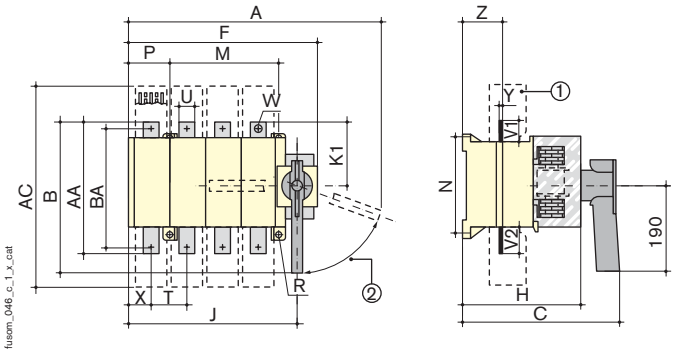

External operation

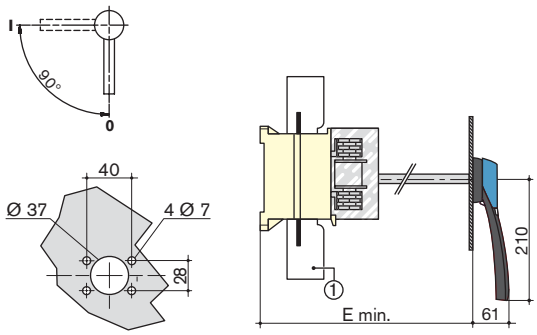

1. Terminal shrouds
2. Reset 70°

Rating (A)	Overall dimensions A 3p.	A 4p.	B	C	E min	Terminal shrouds AC	Switch body F 3p.	F 4p.	H	J 3p.	J 4p.	K1	Switch mounting M	N	P 3p.	P 4p.	R	Connection terminals T	U	V1	V2	W	X 3p.	X 4p.	Y	Z	AA	BA
250	435	495	305	307	300	380	285	345	221	253	313	115	210	180	10	70	7	65	32	35	43	11	31	46	3	67	238	208
400	435	495	305	307	300	380	285	345	221	253	313	115	210	180	10	70	7	65	32	35	43	13	31	46	5	69	238	208
630	490.5	570.5	350	348	345	470	345.5	425.5	268	308	388	150	250	250	20	100	9	80	50	50	50	13	36	65	7	72	300	260
800(1)	490.5	570.5	350	348	345	470	345.5	425.5	268	308	388	150	250	250	20	100	9	80	50	50	50	13	36	65	7	72	300	-

(1) BS88 only.

- **BS88 - FUSOMAT 1250 A**
  NFC and DIN - FUSOMAT 800 to 1250 A

Direct operation

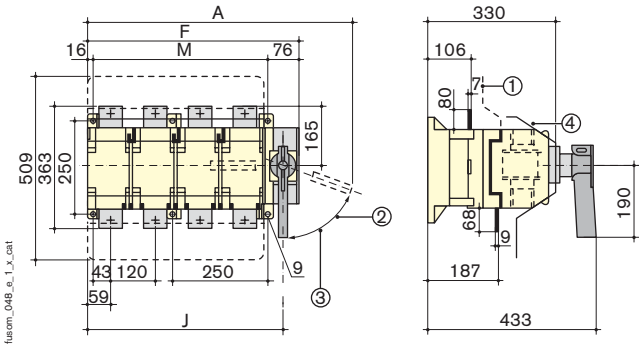

External operation

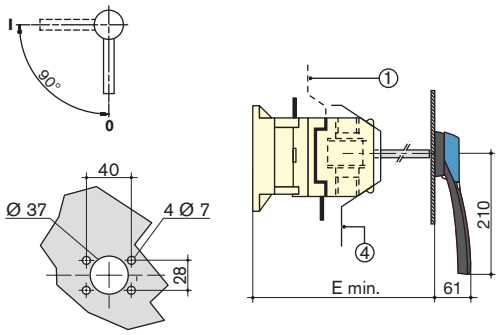

1. Top terminal screens
2. Reset 70°
3. Padlocking 65°
4. Front shield

Rating (A)	Overall dimensions A 3p.	A 4p.	E min	Switch body F 3p.	F 4p.	J 3p.	J 4p.	Switch mounting M 3p.	M 4p.
800(1)	582	702	345	437	557	399.5	519.5	345	465
1250	582	702	345	437	557	399.5	519.5	345	465

(1) NFC and DIN only.

This document is not a contract. SOCOMEC reserves the right to modify features without prior notice in view of continued improvement. 2008 - 2009

Dimensions

Side operation

• **BS88 / NFC and DIN - FUSOMAT 250 to 630 A**

Direct right-side operation

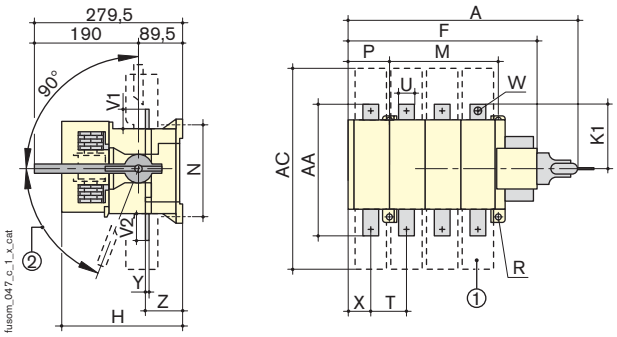

External right-side operation

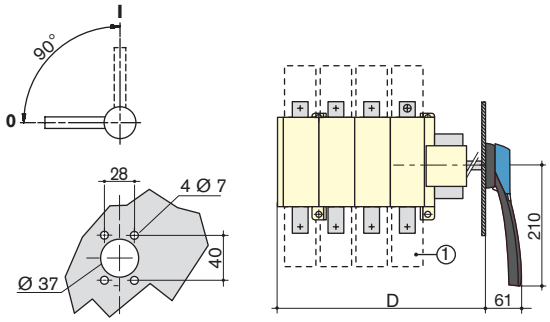

1. Terminal screen
2. Reset 70°

Rating (A)	Overall dimensions A 3p.	A 4p.	D 3p.	D 4p.	Terminal shrouds AC	Switch body F 3p.	F 4p.	H	K1	Switch mounting M	N	P 3p.	P 4p.	R	Connection terminals T	U	V1	V2	W	X 3p.	X 4p.	Y	Z	AA
250	365	425	357	417	388	285	345	221	115	210	180	10	70	7	65	32	35	43	11	31	46	3	67	238
400	365	425	357	417	388	285	345	221	115	210	180	10	70	7	65	32	35	43	13	31	46	5	69	238
630	421.5	501.5	413	493	470	345.5	425.5	268	150	250	250	20	100	9	80	50	50	50	13	36	65	7	72	300

• **BS88 / NFC and DIN - FUSOMAT 800 to 1250 A**

Direct right-side operation

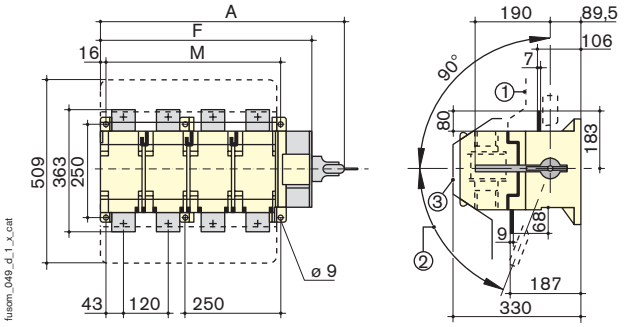

External right-side operation

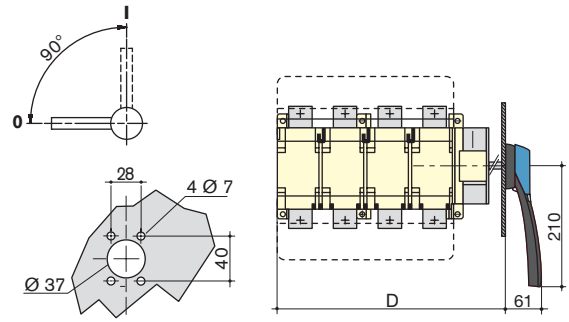

1. Top terminal screens
2. Reset 70°
3. Front shield

Rating (A)	Overall dimensions A 3p.	A 4p.	D 3p.	D 4p.	Switch body F 3p.	F 4p.	Switch mounting M 3p.	M 4p.
800	522	641	504	624	437	557	345	465
1250	522	641	504	624	437	557	345	465

This document is not a contract. SOCOMEC reserves the right to modify features without prior notice in view of continued improvement. 2008 - 2009

Dimensions

Connection terminals

• FUSOMAT 800 A

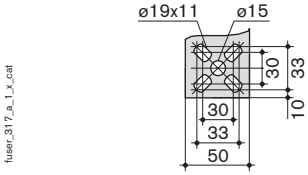

• FUSOMAT 1250 A - top

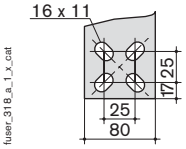

• FUSOMAT 1250 A - bottom

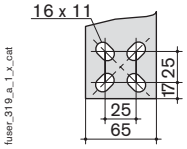

Door drilling with CASTELL K lock

• Front operation

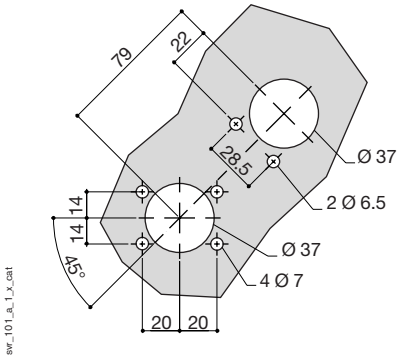

• Side operation

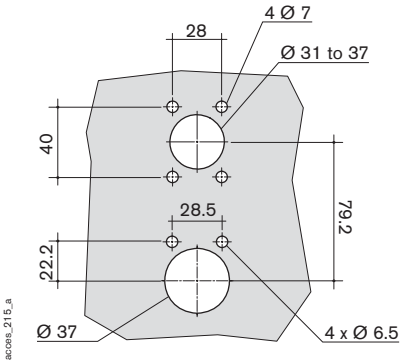

This document is not a contract. SOCOMEC reserves the right to modify features
without prior notice in view of continued improvement. 2008 - 2009

Other fuse combination switches

bd_03_04_01

Despite already having in stock a wide range of **fuse combination switches**, SOCOMEC also manufactures specific products suitable for all your requirements. Some of these products can be seen on these two pages, but this list does not include them all. Please, feel free to consult us.

Conformity to standards
- IEC 60947-3
- BS EN 60947-3
- EN 60947-3
- NBN EN 60947-3
- VDE 0660-107 (1992)

Multipolar switches & mixed ratings

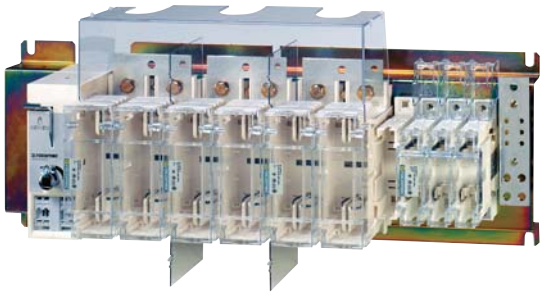

fuser_468_a

The unique design of the FUSERBLOC range enables a high degree of flexibility. For example a multipolar switch, up to 21 poles for a specific application bringing many benefits to both the installer and user. It is also possible to have mixed ratings (example: 3 x 800 A + 6 pole 160 A).
That allows the operation of 2 or more motors with one handle.

These products provide an easy and profitable solution against a main switch plus 2 or more Circuit breakers connected in parallel (feeding several motors). This concept also brings real space saving in your panels.

Handle between poles

fuser_552_a

The flexible modular construction of both the switch poles and operating mechanism allows the handle position to be supplied between the poles. Such configurations can be useful on high density switchboards or applications where switches are required to be mounted close to the door hinges.
Although the FUSERBLOC range is supplied as standard with the operating mechanism on the right. It is also possible to supply the operating mechanism between the poles for certain applications, on request.

Semi-conductor protection (DRIVES, UPS…)

fuser_437_a

High speed fuses are the only products giving real protection of electronic components.
SOCOMEC has a full range of “Fuse combination switches” for the protection of electronic products.

The FUSERBLOC flexible modulable design facilitates a full range of two pole switches for DC applications. It allows valuable space saving in comparison to standard three pole devices for typical applications such as Battery protection or DC bus for large inverters.

This document is not a contract. SOCOMEC reserves the right to modify features without prior notice in view of continued improvement. 2008 - 2009

Fused changeover switches

fuser_426_a

SOCOMEC's range of fused changeover switches, from 20 to 400 A is an useful solution for the protection and disconnection of stand-by pumps.

FUSERBLOC with rear connection

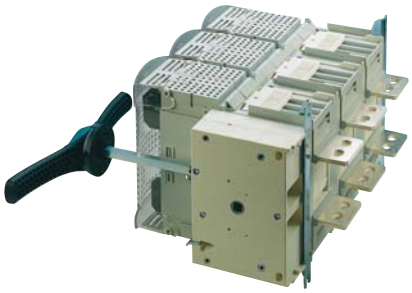

fuser_661_a

FUSERBLOC fuse combination switches with rear connections are available from 32 to 1250 A, they allow a high density of feeders in a panel.
The products are available with top and bottom rear connections and partial rear connections, top or bottom.
Please consult us, for further information.

Plug-in fuse combination switches

flexy_027_a

FUSERBLOC fuse combination switches with plug-in are available from 32 to 400 A, they are for systems with 60 mm distance between busbars centre.
The plug-in connection principle offers space saving, easier and faster installation. The system allows addition or replacement of devices under voltage.
Please consult us, for further information.

FUSERBLOC solar application

fuser_701_a

The modulable and flexible construction of the FUSERBLOC range, from 32 to 1250 A, permit the design of product dedicated to special applications.
The superior electrical characteristics of these products, four breaking points in series per module with silver alloy contacts points ensure very high breaking capacities in DC voltage for the Photovoltaic market.

SELECTION GUIDE

FUSE PROTECTION

APPLICATIONS

- Wiring systems
- Power electronics
- Section feeders
- Incomers
- Motor circuits

CHARACTERISTICS

STANDARD
- BS
- IEC 60269

PROTECTION
- Against overloads
- Against short-circuits
- Against indirect contact
- Of semi-conductors

FUSE DISCONNECTOR
- For cylindrical fuses
- For knife-blade fuses

ISOLATION
- Single-pole
- Multi-pole
- Simultaneous 3-pole or 4-pole

SWITCH BODY
- Modular

PAGES

This document is not a contract. SOCOMEC reserves the right to modify features without prior notice in view of continued improvement. 2008 - 2009

As well as from the rating of the fuse or the fuse holder, the selection is conditioned by the requirements imposed by standards and the functional specifications of the fuses (BS88, NFC, DIN, UL, UR…).
We remain at your disposal to study together any adaptation to specific requirements which cannot be covered by this standard offer. Do not hesitate to consult us.

	fusib_140_a_2_cat **BS88 industrial fuselinks 2 to 1 250 A**	fusib_103_a_2_cat fusib_116_a_3_cat **NFC-DIN industrial fuselinks 0.16 to 1 250 A**	fusib_105_b_a_1_cat **High speed fuses (UR) 10 to 2 000 A**	rm_017_a_4_cat **RM RMS 32 to 100 A**	socle_063_a_2_cat **Fuse bases 160 to 2 500 A**
	●	●			
	●		●		
				●	●
	●	●			
	●	●			
	•				
	•	•	•	•	•
	•	•	•		
	•	•	•		
	•	•			
	•		•		
				•	
					•
				•	•
				•	•
				•	
				•	
	see page A.224	see page A.232	see page A.242	see page A.252	see page A.256

This document is not a contract. SOCOMEC reserves the right to modify features without prior notice in view of continued improvement. 2008 - 2009

BS88 industrial fuselinks

2 to 1 250 A

Functions
References
Accessories
Characteristics

fusib_134_a_1_cat

fusib_135_a_1_cat

fusib_140_a_1_cat

fusib_137_a_1_cat

Functions

Socomec **industrial fuses** protect installations and people against overcurrents for any low voltage electrical circuit.

Advantages

Performance

- High breaking capacity 120 kA at 500 V, 80 kA at 690 V.
- High short-cicuit limitation capacity.
- Simple, reliable discrimination.

Reliability

Absolute protection over time guaranteed by the simplicity of manufacture and function (Joule effect).

Safety

The energy given off whilst eliminating the fault is contained within the cartridge.

Conformity to standards

- IEC 60269-1
- IEC 60269-2
- IEC 60269-2-1
- NF EN 60269-1
- NF C 63-210
- NF C 63211
- VDE 0636-10
- DIN 43620

Available on request

- EDF application: T2 fuses, in accordance with standard HN 63 - S20.
- 690 V knife-edge fuses.
- UL and CSA fuses for North American markets, see page A.308.

This document is not a contract. SOCOMEC reserves the right to modify features without prior notice in view of continued improvement. 2008 - 2009

References

Distribution industrial fuselinks (type gG)

Fuse size	F1(1)		F2(1)		A1(2)		A2(2)		A3(2)	
Type	NS / NSD		ES / ESD		NIT / NITD		TIA / AAO		TIS / BAO	
Rating (A)	Voltage (VAC)	References	Voltage (VAC)	References	Voltage (VAC)	References	Voltage (VAC)	References	Voltage (VAC)	References
2	550	6F10 **0002**	550	6F20 **0002**	660	6A10 **0002**	550	6A20 **0002**		
4	550	6F10 **0004**	550	6F20 **0004**	660	6A10 **0004**	550	6A20 **0004**		
6	550	6F10 **0006**	550	6F20 **0006**	660	6A10 **0006**	550	6A20 **0006**		
10	550	6F10 **0010**	550	6F20 **0010**	660	6A10 **0010**	550	6A20 **0010**		
16	550	6F10 **0016**	550	6F20 **0016**	660	6A10 **0016**	550	6A20 **0016**		
20	550	6F10 **0020**	550	6F20 **0020**	660	6A10 **0020**	550	6A20 **0020**		
25	550	6F10 **0025**	550	6F20 **0025**	660	6A10 **0025**	550	6A20 **0025**		
32	550	6F10 **0032**	550	6F20 **0032**	660	6A10 **0032**	550	6A20 **0032**		
40			550	6F20 **0040**					550	6A30 **0040**
50			550	6F20 **0050**					550	6A30 **0050**
63			550	6F20 **0063**					550	6A30 **0063**

Fuse size	A3(2)		A4(2)		A4(2)		B1(3)		B1(3)	
Type	OS / OSD		TCP / CEO		TFP / DEO		TBC / AD		TBC / BD	
Rating (A)	Voltage (VAC)	References	Voltage (VAC)	References	Voltage (VAC)	References	Voltage (VAC)	References	Voltage (VAC)	References
2							550	6B10 **0002**		
4							550	6B10 **0004**		
6							550	6B10 **0006**		
10							550	6B10 **0010**		
16							550	6B10 **0016**		
20							550	6B10 **0020**		
25							550	6B10 **0025**		
32			550	6A40 **0032**			550	6B10 **0032**		
40			550	6A40 **0040**					550	6B10 **0040**
50			550	6A40 **0050**					550	6B10 **0050**
63			550	6A40 **0063**					550	6B10 **0063**
80	550	6A30 **0080**	550	6A40 **0080**						
100	550	6A30 **0100**	550	6A40 **0100**						
125					415	6A40 **0125**				
160					415	6A40 **0160**				
200					415	6A40 **0200**				

(1) Offset blade type fuselinks
(2) Offset bolted tag type fuselinks
(3) Centre bolted tag type fuselinks.
Note: pack quantity 3 pieces for each product.

This document is not a contract. SOCOMEC reserves the right to modify features without prior notice in view of continued improvement. 2008 - 2009

BS88 industrial fuselinks
2 to 1 250 A

References

Distribution industrial fuselinks (type gG)

Fuse size	B1(1)		B2(1)		CI(1)		B3(1)		B4(1)	
Type	TC / CD		TF / DD		TKM / EFS		TKF / ED		TMF / ED	
Rating (A)	Voltage (VAC)	References	Voltage (VAC)	References	Voltage (VAC)	References	Voltage (VAC)	References	Voltage (VAC)	References
80	550	6B10 **0080**								
100	550	6B10 **0100**								
125			415	6B20 **0125**	415	6C10 **0125**				
160			415	6B20 **0160**	415	6C10 **0160**				
200			415	6B20 **0200**	415	6C10 **0200**				
250					415	6C10 **0250**	415	6B30 **0250**		
315					415	6C10 **0315**	415	6B30 **0315**		
355									415	6B40 **0355**
400									415	6B40 **0400**

Fuse size	C1(1)		C2(1)		C3(1)		D1(1)		D1(1)	
Type	TM / EF		TTM / FF		TLM / GF		TLU / GH		TXU / GH	
Rating (A)	Voltage (VAC)	References	Voltage (VAC)	References	Voltage (VAC)	References	Voltage (VAC)	References	Voltage (VAC)	References
355	415	6C10 **0355**								
400	415	6C10 **0400**								
450			550	6C20 **0450**						
500			550	6C20 **0500**						
560			550	6C20 **0560**						
630			550	6C20 **0630**						
710					550	6C30 **0710**	550	6D10 **0710**		
800					550	6C30 **0800**	550	6D10 **0800**		
1000									550	6D10 **1000**
1250									550	6D10 **1250**

(1) Centre bolted tag type fuselinks.

Note: pack quantity 3 pieces for each product.

This document is not a contract. SOCOMEC reserves the right to modify features without prior notice in view of continued improvement. 2008 - 2009

References

▶ *Motor rated industrial fuselinks (type gM)*

Fuse size	F1(1)		F2(1)		A1(2)		A2(2)		A3(2)	
Type	NS / NSD				NIT / NITD		TIA / AAO		TIS / BAO	
Rating (A)	Voltage (VAC)	References	Voltage (VAC)	References	Voltage (VAC)	References	Voltage (VAC)	References	Voltage (VAC)	References
20M25	415	6F1M **0025**			550	6A1M **0025**				
20M32	415	6F1M **0032**			550	6A1M **0032**				
32M36	415	6F1M **0036**								
32M40	415	6F1M **0040**			550	6A1M **0040**	550	6A2M **0040**		
32M50	415	6F1M **0050**			550	6A1M **0050**	550	6A2M **0050**		
32M63	415	6F1M **0063**			550	6A1M **0063**	550	6A2M **0063**		
63M80			415	6F2M **0080**					550	6A3M **0080**
63M100			415	6F2M **0100**					550	6A3M **0100**

Fuse size	A3(2)		A4(2)		A4(2)		B1(3)	
Type	OS / OSD		TCP / CEO		TFP / DEO		TC / CD	
Rating (A)	Voltage (VAC)	References	Voltage (VAC)	References	Voltage (VAC)	References	Voltage (VAC)	References
100M125	550	6A3M **0125**	415	6A4M **0125**			550	6B1M **0125**
100M160	550	6A3M **0160**	415	6A4M **0160**			550	6B1M **0160**
100M200			415	6A4M **0200**			550	6B1M **0200**
200M250					415	6A4M **0250**		
200M315					415	6A4M **0315**		

Fuse size	B2(3)		B3(3)		B4(3)		C1(3)	
Type	TF / DD				TMF / ED		TM / EF	
Rating (A)	Voltage (VAC)	References	Voltage (VAC)	Reference	Voltage (VAC)	Reference	Voltage (VAC)	Reference
200M250	415	6B2M **0250**						
200M315	415	6B2M **0315**						
315M400			415	6B3M **0400**				
400M500					550	6B4M **0500**	550	6C1M **0500**

(1) Offset blade type fuselinks
(2) Offset bolted tag type fuselinks
(3) Centre bolted tag type fuselinks.

Note: pack quantity 3 pieces for each product.

This document is not a contract. SOCOMEC reserves the right to modify features without prior notice in view of continued improvement. 2008 - 2009

BS88 industrial fuselinks
2 to 1 250 A

Accessories

Fuse holders for offset blade type fuselinks

Voltage: 550 VAC.

References

Rating (A)	Size	Voltage (VAC)	Colour	Output connection	Type	Pack qty	References
32	F1	550	black	front/rear	32NNSF	10	5F10 **0032**
32	F1	550	black	front/rear	32NNNSFBS	10	5F10 **0132**
32	F1	550	black	rear/rear	32NNSBS	10	5F10 **0232**
32	F1	550	white	front/rear	32NNSFW	10	5F10 **1032**
32	F1	550	white	front/rear	32NNSFBSW	10	5F10 **1132**
32	F1	550	white	rear/rear	32NNSBSW	10	5F10 **1232**
63	F2	550	black	front/rear	63ENSF	5	5F20 **0063**
63	F2	550	black	front/rear	63ENSFBS	5	5F20 **0163**
63	F2	550	black	rear/rear	63ENSBS	5	5F20 **0263**
63	F2	550	white	front/rear	63ENSFW	5	5F20 **1063**
63	F2	550	white	front/rear	63ENSFBSW	5	5F20 **1163**
63	F2	550	white	rear/rear	63ENSBSW	5	5F20 **1263**

Accessories

Rating (A)	Size	Output connection	Type	Pack qty	References
32	F1	busbar connecting systems	32BCSNNS	1	5F10 **0001**
63	F2	busbar connecting systems	63BCSENS	1	5F20 **0001**
32	F1	solid neutral links	32NNL	1	5F10 **0002**
63	F2	solid neutral links	63ENL	1	5F20 **0002**

Fuse holders for offset bolted tag type fuselinks

Voltage: 660 VAC.
Output connection: front/front.

References

Rating (A)	Size	Voltage (VAC)	Colour	Output connection	Type	Pack qty	References
32	A1	660	black	front/front	CM32FC	10	5A10 **0032**
32	A1	660	white	front/front	CM32FCW	10	5A10 **1032**
32	A2	660	black	front/front	CM32F	10	5A20 **0032**
32	A2	660	white	front/front	CM32FW	10	5A20 **1032**
63	A3	660	black	front/front	CM63F	5	5A30 **0063**
63	A3	660	white	front/front	CM63FW	5	5A30 **1063**
100	as A3	660	black	front/front	CM100F	5	5A30 **0100**
100	as A3	660	white	front/front	CM100FW	5	5A30 **1100**

Accessories

Rating (A)	Size	Output connection	Type	Pack qty	References
32	A1	rear connection studs	32BSC	10	5A10 **0001**
32	A2	rear connection studs	32BS	10	5A20 **0001**
63 … 100	A3	rear connection studs	63/100BS	5	5A30 **0001**
32	A1 - A2	lockable safety carrier	32LSC	3	5A20 **0002**
63 … 100	A3	lockable safety carrier	63/100LSC	3	5A30 **0002**
32 … 100	A1 - A3	ganging link pack	GLP	1	5A30 **0003**
32 … 100	A1 - A3	neon indicator (90 - 660 VAC)	NI	3	5A30 **0004**
32 … 100	A1 - A3	security clip	CMSC	10	5A30 **0005**

This document is not a contract. SOCOMEC reserves the right to modify features without prior notice in view of continued improvement. 2008 - 2009

Characteristics

Distribution industrial fuselinks (type gG)

Fuse cut off current

Fuse size Type	F1 NS/NSD	F2 ES/ESD	A1 NIT/NITD	A2 TIA/AAO	A3 TIS/BAO	A3 OS/OSD	A4 TCP/CEO
Rating (A)	50/80 kA	50/80 kA	50/80 kA	50/80 kA	50/80 kA	50/80 kA	50/80 kA
2	0.5/0.6	0.5/0.6	0.5/0.6	0.5/0.6			
4	0.9/1.0	0.9/1.0	0.7/0.8	1.0/1.1			
6	1.4/1.6	1.4/1.6	1.0/1.1	1.5/1.8			
10	2.4/2.6	2.4/2.6	1.7/2.0	2.4/2.8			
16	2.5/2.9	2.5/2.9	2.5/3.0	2.6/3.0			
20	3.2/3.8	3.2/3.8	2.5/3.0	3.3/4.0			
25	3.5/4.0	3.5/4.0	3.5/4.0	3.8/4.1			
32	4.1/4.9	4.1/4.9	3.5/4.0	4.2/5.0			4.4/5.0
40		5.0/5.9			5.1/6.0		5.0/6.0
50		5.2/6.0			7.0/8.0		6.6/7.8
63		5.8/6.6			9.0/10.0		8.9/10.0
80						9.5/11.0	9.5/11.0
100						12.0/14.0	12.0/14.0

Fuse cut off current

Fuse size Type	A4 TFP/DEO	B1 TBC/AD	B1 TBC/BD	B1 TC/CD	B2 TF/DD	CI TKM/EFS	B3 TKF/ED
Rating (A)	50/80 kA	50/80 kA	50/80 kA	50/80 kA	50/80 kA	50/80 kA	50/80 kA
2		0.4/0.5					
4		1.0/1.1					
6		1.4/1.6					
10		1.8/2.0					
16		2.0/2.2					
20		2.6/3.0					
25		3.6/4.0					
32		4.4/5.0					
40			5.0/6.0				
50			6.6/7.8				
63			8.9/10.0				
80				9.5/11.0			
100				12.0/14.0			
125	12.0/14.0				12.0/14.0	12.0/14.0	
160	17.0/19.0				17.0/19.0	17.0/19.0	
200	19.0/24.0				19.0/24.0	19.0/24.0	
250						23.0/28.0	23.0/28.0
315						27.0/30.0	27.0/30.0

This document is not a contract. SOCOMEC reserves the right to modify features without prior notice in view of continued improvement. 2008 - 2009

BS88 industrial fuselinks
2 to 1 250 A

Characteristics

Distribution industrial fuselinks (type gG)

Fuse cut off current

Fuse size Type	B4 TMF/ED	C1 TM/EF	C2 TTM/FF	C3 TLM/GF	D1 TLU/GH	D1 TXU/GH
Rating (A)	50/80 kA	50/80 kA	50/80 kA	50/80 kA	50/80 kA	50/80 kA
355	30.0/34.0	30.0/34.0				
400	34.0/38.0	34.0/38.0				
450			40.0/48.0			
500			42.0/50.0			
560			46.0/54.0			
630			51.0/60.0			
710				55.0/64.0	55.0/64.0	
800				60.0/70.0	60.0/70.0	
1000						69.0/79.0
1250						90.0/105.0

This document is not a contract. SOCOMEC reserves the right to modify features without prior notice in view of continued improvement. 2008 - 2009

Characteristics

Motor rated industrial fuselinks (type gM)

Fuse cut off current

Fuse size Type	F1 NS/NSD	F2	A1 NIT/NITD	A2 TIA/AAO	A3 TIS/BAO	A3 OS/OSD	A4 TCP/CEO
Rating (A)	50/80 kA	50/80 kA	50/80 kA	50/80 kA	50/80 kA	50/80 kA	50/80 kA
20M25	3.4/4.0		4.6/5.5				
20M32	4.0/5.0		4.6/5.5				
32M36	4.5/5.1						
32M40	4.8/5.5		5.0/6.0	5.0/6.0			
32M50	5.3/6.2		6.5/7.5	6.6/7.8			
32M63	5.9/6.9		7.5/10.0	8.5/9.0			
63M80		9.0/10.0			9.5/12.0		
63M100		10.1/10.3			12.0/13.0		
100M125						13.0/15.0	13.0/15.0
100M160						17.0/20.0	17.0/20.0
100M200							20.0/23.0

Fuse cut off current

Fuse size Type	A4 TFP/DEO	B1 TC/CD	B2 TF/DD	B3	B4 TMF/ED	C1 TM/EF
Rating (A)	50/80 kA	50/80 kA	50/80 kA	50/80 kA	50/80 kA	50/80 kA
100M125		13.0/15.0				
100M160		17.0/20.0				
100M200		20.0/23.0				
200M250	25.0/29.0		25.0/29.0			
200M315	27.0/31.0		27.0/31.0			
315M400				34.0/40.0		
400M500					42.0/50.0	42.0/50.0

This document is not a contract. SOCOMEC reserves the right to modify features without prior notice in view of continued improvement. 2008 - 2009

NFC-DIN industrial fuselinks

0.16 to 1250 A

- Functions
- References
- Accessories
- Dimensions
- Curves

Functions

SOCOMEC **industrial fuses** protect installations and people from overcurrents in any low voltage electrical circuit.

Conformity to standards

- IEC 60269-1
- IEC 60269-2
- IEC 60269-2-1
- NF EN 60269-1
- NF C 63-210
- NF C 63211
- VDE 0636-10
- DIN 43620

Approvals and certifications(1)

(1) Please consult us.

Advantages

Performance

- High breaking capacity - 120 kA at 500 V, 80 kA at 690 V.
- High short-cicuit limitation capacity.
- Simple, reliable discrimination.

Reliability

Absolute protection over time guaranteed by the simplicity of manufacture and function (Joule effect).

Safety

The energy given off whilst eliminating the fault is contained within the cartridge.

Available on request

- EDF application: T2 fuses, in accordance with standard HN 63 - S20.
- British Standard (BS) fuses for UK markets.
- UL and CSA fuses for North-American markets, see page A.308.
- T00 and T4 fuses for 690 VAC.

This document is not a contract. SOCOMEC reserves the right to modify features without prior notice in view of continued improvement. 2008 - 2009

References

Cylindrical fuselinks

- **gG type fuselinks** (distribution)[1][2]

	10 x 38 without striker		14 x 51 without striker		14 x 51 with striker		22 x 58 without striker		22 x 58 with striker	
Rating (A)	Voltage (VAC)	References	Voltage (VAC)	References	Voltage (VAC)	References	Voltage (VAC)	References	Voltage (VAC)	References
0.5	500	6012 **0000**								
1	500	6012 **0001**	690	6022 **0001**						
2	500	6012 **0002**	690	6022 **0002**	500	6052 **0002**	690	6032 **0002**		
4	500	6012 **0004**	690	6022 **0004**	500	6052 **0004**	690	6032 **0004**	690	6062 **0004**
6	500	6012 **0006**	690	6022 **0006**	500	6052 **0006**	690	6032 **0006**	690	6062 **0006**
8	500	6012 **0008**	690	6022 **0008**	500	6052 **0008**	690	6032 **0008**	690	6062 **0008**
10	500	6012 **0010**	690	6022 **0010**	500	6052 **0010**	690	6032 **0010**	690	6062 **0010**
12	500	6012 **0012**	690	6022 **0012**	500	6052 **0012**	690	6032 **0012**	690	6062 **0012**
16	500	6012 **0016**	690	6022 **0016**	500	6052 **0016**	690	6032 **0016**	690	6062 **0016**
20	500	6012 **0020**	690	6022 **0020**	500	6052 **0020**	690	6032 **0020**	690	6062 **0020**
25	500	6012 **0025**	690	6022 **0025**	500	6052 **0025**	690	6032 **0025**	690	6062 **0025**
32	400	6012 **0032**	500	6022 **0032**	500	6052 **0032**	690	6032 **0032**	690	6062 **0032**
40			500	6022 **0040**	500	6052 **0040**	690	6032 **0040**	690	6062 **0040**
50			400	6022 **0050**	400	6052 **0050**	690	6032 **0050**	690	6062 **0050**
63							690	6032 **0063**	690	6062 **0063**
80							500	6032 **0080**	500	6062 **0080**
100							500	6032 **0100**	500	6062 **0100**
125							400	6032 **0125**	400	6062 **0125**
Accessory										
Solid cylindrical link		6019 **0000**		6029 **0000**		6029 **0000**		6039 **0000**		6039 **0000**

- **aM type fuselinks** (motor)[1][2]

	10 x 38 without striker		14 x 51 without striker		14 x 51 with striker		22 x 58 without striker		22 x 58 with striker	
Rating (A)	Voltage (VAC)	References	Voltage (VAC)	References	Voltage (VAC)	References	Voltage (VAC)	References	Voltage (VAC)	References
0.16	500	6013 **0007**								
0.25	500	6013 **0005**	690	6023 **0005**						
0.5	500	6013 **0000**	690	6023 **0000**						
1	500	6013 **0001**	690	6023 **0001**						
2	500	6013 **0002**	690	6023 **0002**	500	6053 **0002**	690	6033 **0002**		
4	500	6013 **0004**	690	6023 **0004**	500	6053 **0004**	690	6033 **0004**	690	6063 **0004**
6	500	6013 **0006**	690	6023 **0006**	500	6053 **0006**	690	6033 **0006**	690	6063 **0006**
8	500	6013 **0008**	690	6023 **0008**	500	6053 **0008**	690	6033 **0008**	690	6063 **0008**
10	500	6013 **0010**	690	6023 **0010**	500	6053 **0010**	690	6033 **0010**	690	6063 **0010**
12	500	6013 **0012**	690	6023 **0012**	500	6053 **0012**	690	6033 **0012**	690	6063 **0012**
16	500	6013 **0016**	690	6023 **0016**	500	6053 **0016**	690	6033 **0016**	690	6063 **0016**
20	500	6013 **0020**	690	6023 **0020**	500	6053 **0020**	690	6033 **0020**	690	6063 **0020**
25	400	6013 **0025**	690	6023 **0025**	500	6053 **0025**	690	6033 **0025**	690	6063 **0025**
32			500	6023 **0032**	500	6053 **0032**	690	6033 **0032**	690	6063 **0032**
40			500	6023 **0040**	500	6053 **0040**	690	6033 **0040**	690	6063 **0040**
50			400	6023 **0050**	400	6053 **0050**	690	6033 **0050**	690	6063 **0050**
63							690	6033 **0063**	690	6063 **0063**
80							500	6033 **0080**	500	6063 **0080**
100							500	6033 **0100**	400	6063 **0100**
125							400	6033 **0125**	400	6063 **0125**
Accessory										
Solid cylindrical link		6019 **0000**		6029 **0000**		6029 **0000**		6039 **0000**		6039 **0000**

(1) To be ordered in multiples of 10.
(2) Rated breaking capacity: fuses 400/500 VAC = 120 kA ; fuses 690 VAC = 80 kA.

This document is not a contract. SOCOMEC reserves the right to modify features without prior notice in view of continued improvement. 2008 - 2009

NFC-DIN industrial fuselinks
0.16 to 1250 A

References

Knife-edge fuselinks (NH)

fusib_114_b_2_cat

• **gG type fuselinks** (distribution)[1]

Rating (A)	000/00C without striker Voltage (VAC)	References	00 without striker Voltage (VAC)	References	0 without striker Voltage (VAC)	References	0 with striker Voltage (VAC)	References	1 without striker Voltage (VAC)	References	1 with striker Voltage (VAC)	References
6	500	6600 **0006**										
10	500	6600 **0010**										
16	500	6600 **0016**			500	6702 **0016**						
20	500	6600 **0020**			500	6702 **0020**						
25	500	6600 **0025**			500	6702 **0025**						
32	500	6600 **0032**			500	6702 **0032**	690	6852 **0032**				
40	500	6600 **0040**			500	6702 **0040**	690	6852 **0040**				
50	500	6600 **0050**			500	6702 **0050**	690	6852 **0050**				
63	500	6600 **0063**			500	6702 **0063**	690	6852 **0063**	500	6712 **0063**		
80	500	6600 **0080**			500	6702 **0080**	690	6852 **0080**	500	6712 **0080**	690	6862 **0080**
100	500	6600 **0100**			500	6702 **0100**	690	6852 **0100**	500	6712 **0100**	690	6862 **0100**
125			500	6692 **0125**	500	6702 **0125**	500	6852 **0125**	500	6712 **0125**	690	6862 **0125**
160			500	6692 **0160**	500	6702 **0160**	500	6852 **0160**	500	6712 **0160**	690	6862 **0160**
200					500	6702 **0200**	500	6852 **0200**	500	6712 **0200**	690	6862 **0200**
250									500	6712 **0250**	500	6862 **0250**
315									500	6712 **0315**	500	6862 **0315**

Accessory

Solid link		6420 **0000**		6420 **0000**		6421 **0000**		6421 **0000**		6421 **0001**		6421 **0001**

Rating (A)	2 without striker Voltage (VAC)	References	2 with striker Voltage (VAC)	References	3 without striker Voltage (VAC)	References	3 with striker Voltage (VAC)	References	4 without striker Voltage (VAC)	References	4 with striker Voltage (VAC)	References
100	500	6722 **0100**										
125	500	6722 **0125**	690	6872 **0125**								
160	500	6722 **0160**	690	6872 **0160**								
200	500	6722 **0200**	690	6872 **0200**								
250	500	6722 **0250**	690	6872 **0250**								
315	500	6722 **0315**	690	6872 **0315**	500	6732 **0315**	690	6882 **0315**	500	6746 **0315**	500	6896 **0315**
400	500	6722 **0400**	500	6872 **0400**	500	6732 **0400**	690	6882 **0400**	500	6746 **0400**	500	6896 **0400**
500	500	6722 **0500**	500	6872 **0500**	500	6732 **0500**	690	6882 **0500**	500	6746 **0500**	500	6896 **0500**
630					500	6732 **0630**	500	6882 **0630**	500	6746 **0630**	500	6896 **0630**
800					500	6732 **0800**			500	6746 **0800**	500	6896 **0800**
900									500	6746 **0900**	500	6896 **0900**
1000									500	6746 **1000**	500	6896 **1000**
1250									500	6746 **1200**	500	6896 **1200**

Accessory

Solid link		6421 **0002**		6421 **0002**		6421 **0003**		6421 **0003**		6441 **0005**		6441 **0005**

(1) Rated breaking capacity: fuses 400/500 VAC = 120 kA; fuses 690 VAC = 80 kA.

Sizes 000, 00, 1 and 2 to be ordered in multiples of 3.
Sizes 3 and 4 may be ordered individually.

This document is not a contract. SOCOMEC reserves the right to modify features without prior notice in view of continued improvement. 2008 - 2009

References

▶ *Knife-edge fuselinks (NH)*

• aM type fuselinks (motor)[1]

Rating (A)	000/00C without striker Voltage (VAC)	References	00 without striker Voltage (VAC)	References	0 without striker Voltage (VAC)	References	0 with striker Voltage (VAC)	References	1 without striker Voltage (VAC)	References	1 with striker Voltage (VAC)	References
6	500	6601 **0006**										
10	500	6601 **0010**										
16	500	6601 **0016**			500	6703 **0016**						
20	500	6601 **0020**			500	6703 **0020**						
25	500	6601 **0025**			500	6703 **0025**						
32	500	6601 **0032**			500	6703 **0032**	690	6853 **0032**				
40	500	6601 **0040**			500	6703 **0040**	690	6853 **0040**				
50	500	6601 **0050**			500	6703 **0050**	690	6853 **0050**				
63	500	6601 **0063**			500	6703 **0063**	690	6853 **0063**				
80	500	6601 **0080**			500	6703 **0080**	690	6853 **0080**			690	6863 **0080**
100			500	6693 **0100**	500	6703 **0100**	690	6853 **0100**	500	6713 **0100**	690	6863 **0100**
125			500	6693 **0125**	500	6703 **0125**	690	6853 **0125**	500	6713 **0125**	690	6863 **0125**
160			500	6693 **0160**	500	6703 **0160**	690	6853 **0160**	500	6713 **0160**	690	6863 **0160**
200					500	6703 **0200**	500	6853 **0200**	500	6713 **0200**	690	6863 **0200**
250									500	6713 **0250**	690	6863 **0250**
315									500	6713 **0315**	500	6863 **0315**

Accessory

Solid link		6420 **0000**		6420 **0000**		6421 **0000**		6421 **0000**		6421 **0001**		6421 **0001**

Rating (A)	2 without striker Voltage (VAC)	References	2 with striker Voltage (VAC)	References	3 without striker Voltage (VAC)	References	3 with striker Voltage (VAC)	References	4 without striker Voltage (VAC)	References	4 with striker Voltage (VAC)	References
100	500	6723 **0100**										
125	500	6723 **0125**										
160	500	6723 **0160**	690	6873 **0160**								
200	500	6723 **0200**	690	6873 **0200**								
250	500	6723 **0250**	690	6873 **0250**								
315	500	6723 **0315**	690	6873 **0315**	500	6733 **0315**	690	6883 **0315**	500	6747 **0315**	500	6897 **0315**
400	500	6723 **0400**	690	6873 **0400**	500	6733 **0400**	690	6883 **0400**	500	6747 **0400**	500	6897 **0400**
500	500	6723 **0500**	500	6873 **0500**	500	6733 **0500**	690	6883 **0500**	500	6747 **0500**	500	6897 **0500**
630					500	6733 **0630**	500	6883 **0630**	500	6747 **0630**	500	6897 **0630**
800									500	6747 **0800**	500	6897 **0800**
1000									500	6747 **1000**	500	6897 **1000**
1250									500	6747 **1200**	500	6897 **1200**

Accessory

Solid link		6421 **0002**		6421 **0002**		6421 **0003**		6421 **0003**		6441 **0005**		6441 **0005**

(1) Rated breaking capacity: fuses 400/500 VAC = 120 kA ; fuses 690 VAC = 80 kA.

Sizes 000, 00, 1 and 2 to be ordered in multiples of 3.
Sizes 3 and 4 may be ordered individually.

This document is not a contract. SOCOMEC reserves the right to modify features without prior notice in view of continued improvement. 2008 - 2009

NFC-DIN industrial fuselinks
0.16 to 1250 A

Accessories

Solid cylindrical link

fusib_123_a_1_cat

Use
Solid link to be used in conjunction with the neutral pole of cylindrical fused disconnecting switches.
3 sizes: 10 x 38, 14 x 51, 22 x 58.

References

Rating (A)	Size	Pack qty	References
32	10 x 38	10	6019 **0000**
50	14 x 51	10	6029 **0000**
100	22 x 58	10	6039 **0000**

Neutral link

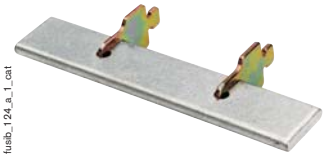

fusib_124_a_1_cat

Use
Solid link to be used in conjunction with fuse bases or knife-edge fused disconnecting switches, generally fitted on the neutral pole.
6 sizes: 000/00C/00-0-1-2-3-4.

References

Rating (A)	Size	Clamping	References
160	000/00C/00	elastic	6420 **0000**
160	0	elastic	6421 **0000**
315	1	elastic	6421 **0001**
400	2	elastic	6421 **0002**
630	3	elastic	6421 **0003**
1250	4	blocked	6441 **0005**

Handle

fusib_122_a_1_cat

Use
For inserting and extracting knife-edge fuses, sizes 000 to 4.

Reference

Type	Reference
Operating handle	6401 **0011**

This document is not a contract. SOCOMEC reserves the right to modify features without prior notice in view of continued improvement. 2008 - 2009

Dimensions

Cylindrical fuselinks (NF)

• Without striker - with striker

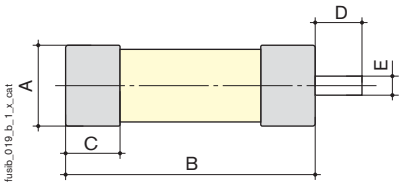

Normative dimensions according to IEC 60269-2-1

Size	A	B	C	D	E
10 x 38	10.3	38	10.5		
14 x 51	14.3	51	13.8	7.5	3.8
22 x 58	22.2	58	16.2	7.5	3.8

Knife-edge fuselinks (NH)

• Without striker

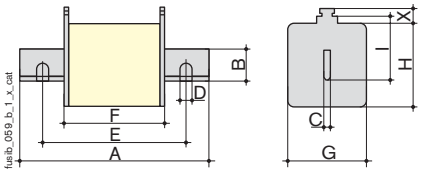

Normative dimensions according to IEC 60269-2-1

Size	A max.	B min.	C	D	E	F max.	G max.	H max.	I	X min.
000/00C	80	15	6			54	21	41	35	11
00	80	15	6			54	30	48	35	11
0	127.5	15	6			68	40	48	35	11
1	137.5	20	6			75	52	53	40	11
2	152.5	25	6			75	60	61	48	11
3	152.5	32	6			75	75	76	60	11
4	203	49	8	16	150	90	105	110	87	11

• With striker

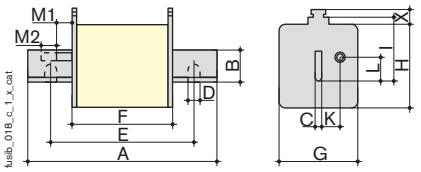

Normative dimensions according to IEC 60269-2-1

Size	A max.	B min.	C	D	E	F max.	G max.	H max.	I	K	L	M1	M2 min.	X min.
0	127.5	15	6			68	45	48	35	11.5	14	25	13	11
1	137.5	20	6			75	52	53	40	13	14.5	25.5	13	11
2	152.5	25	6			75	60	61	48	16	14.5	25.5	13	11
3	152.5	32	6			75	75	76	60	21	14.5	25.5	13	11
4	203	49	8	16	150	90	105	110	87	24.5	14.5	35	13	11

This document is not a contract. SOCOMEC reserves the right to modify features without prior notice in view of continued improvement. 2008 - 2009

NFC-DIN industrial fuselinks
0.16 to 1250 A

Curves characteristic of NF and NH gG type fuses

▶ *Cut-off current diagram*

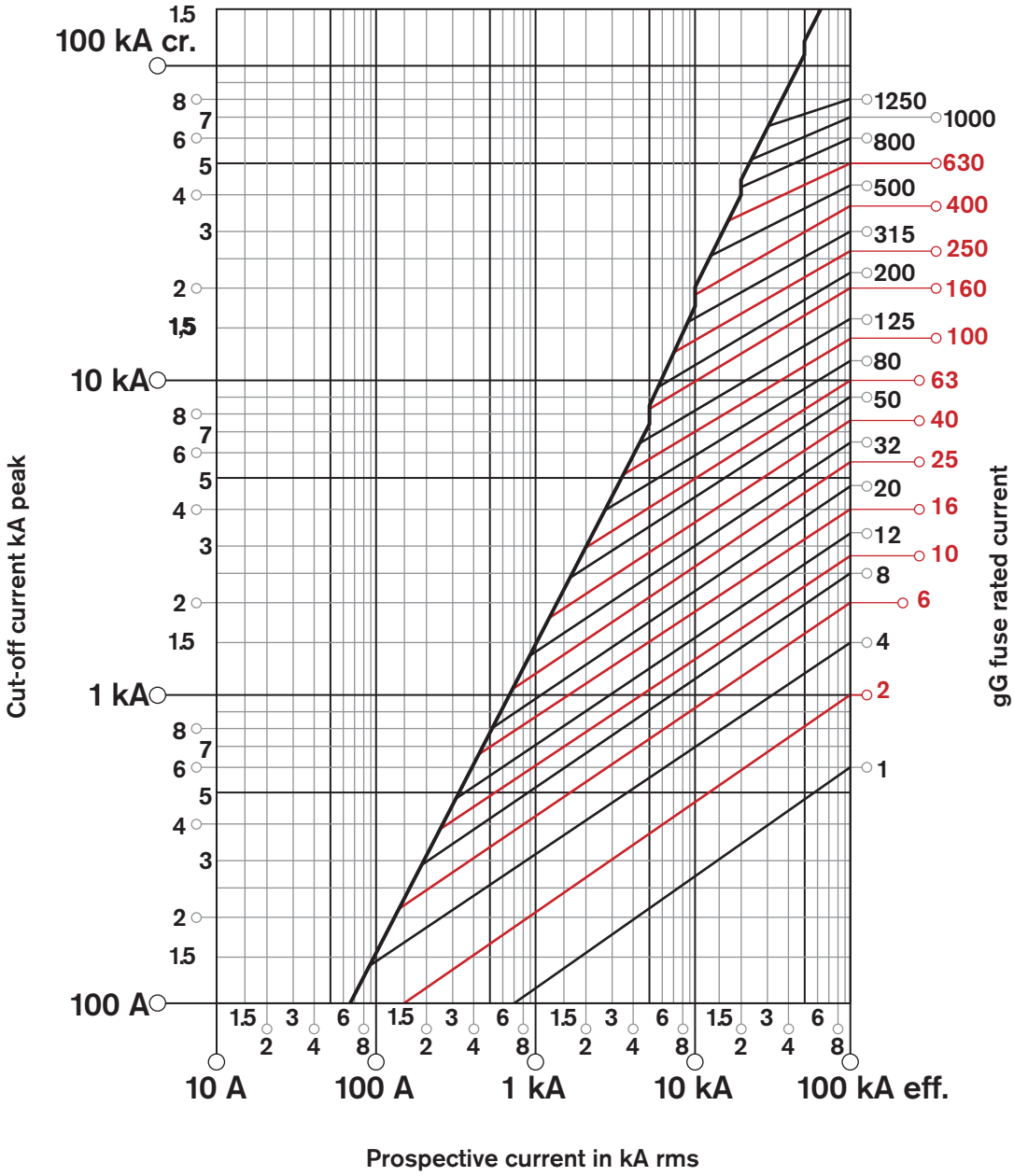

catec_112_e_1_gb_cat

This document is not a contract. SOCOMEC reserves the right to modify features without prior notice in view of continued improvement. 2008 - 2009

Curves characteristic of NF and NH gG type fuses (continued)

▶ *Diagram of thermal constraint limitation*

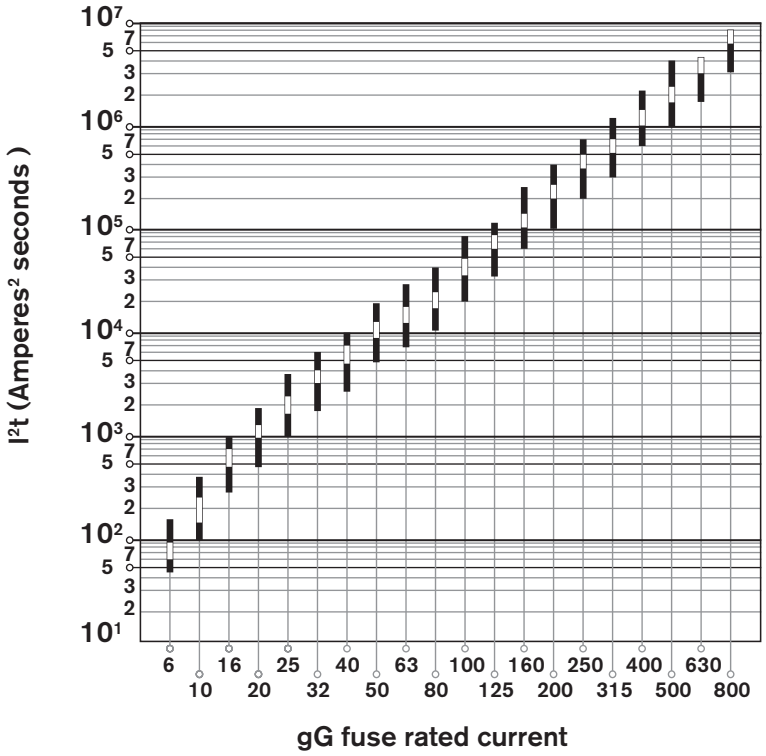

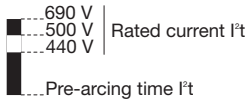

▶ *Time/current operation characteristics*

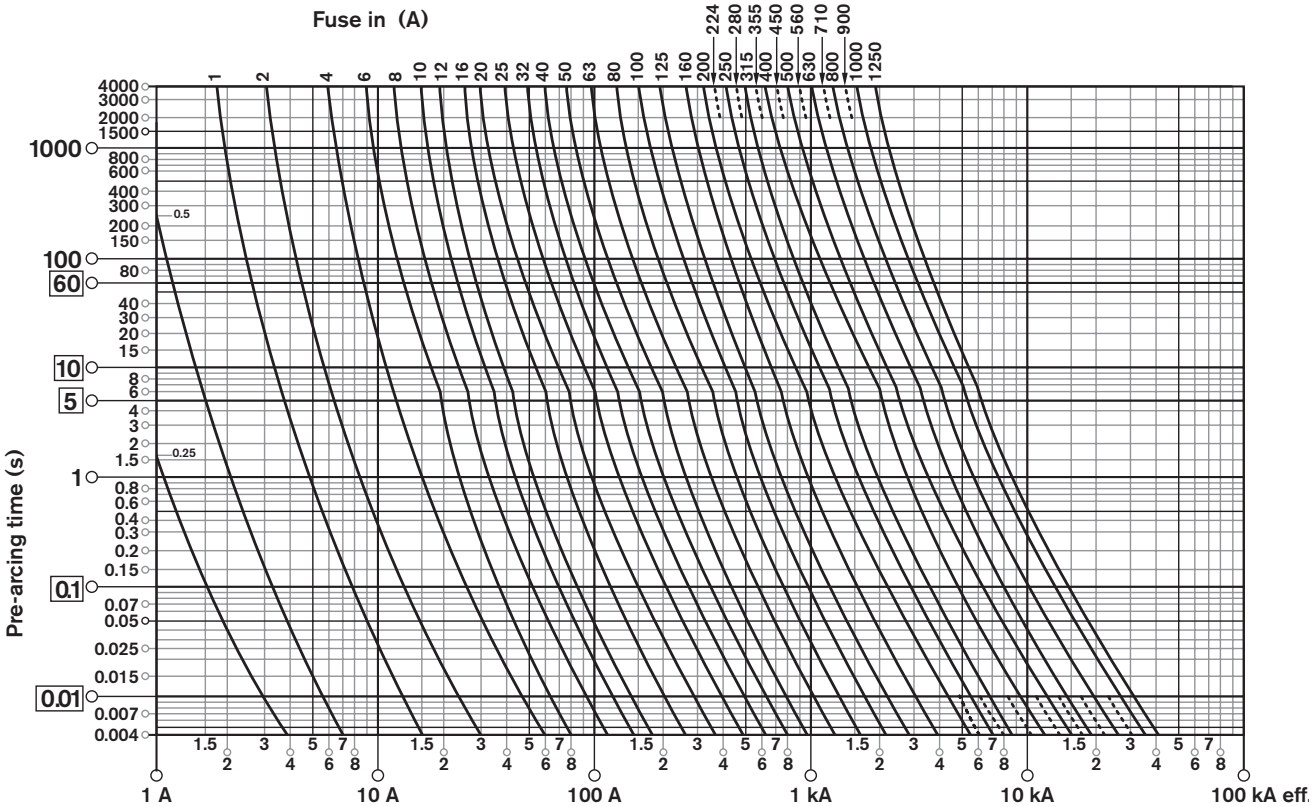

This document is not a contract. SOCOMEC reserves the right to modify features without prior notice in view of continued improvement. 2008 - 2009

NFC-DIN industrial fuselinks
0.16 to 1250 A

Curves characteristic of NF and NH aM type fuses

Current cut-off diagram

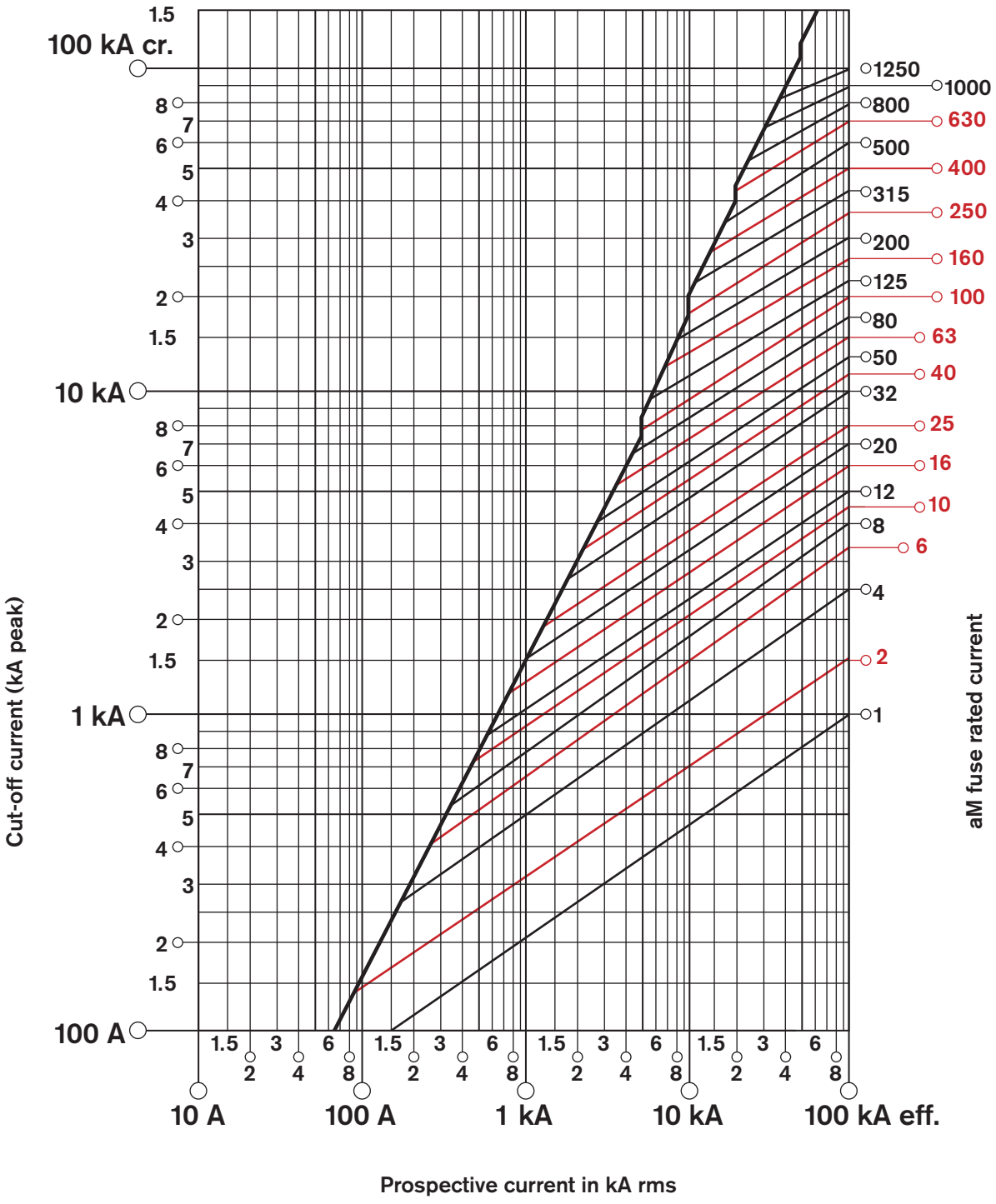

catec_114_d_1_gb_cat.

This document is not a contract. SOCOMEC reserves the right to modify features without prior notice in view of continued improvement. 2008 - 2009

Curves characteristic of NF and NH aM type fuses (continued)

Diagram of thermal constraint limitation

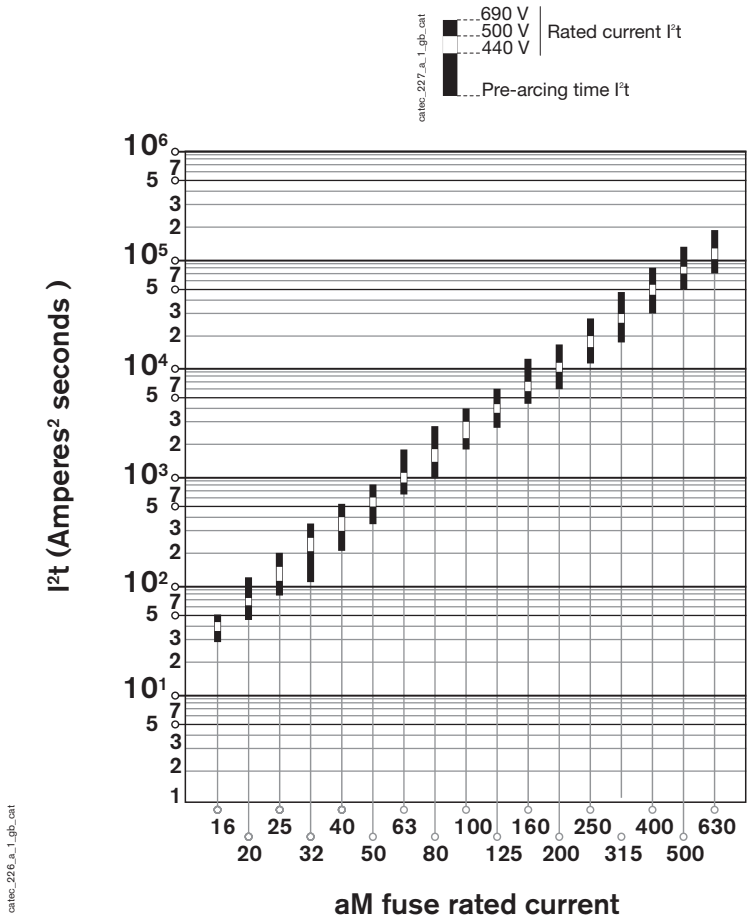

Power losses without striker at In (W)

Rated operational currents In (A)	Fuses size 00	0/0S	1	2	3
16	1.1 W				
20	1.4 W				
25	1.7 W				
32	2.2 W	2.2 W			
35	2.4 W	2.4 W			
40	2.8 W	2.8 W			
50	3.6 W	3.6 W	3.6 W		
63	4.6 W	4.6 W	4.6 W	4.6 W	
80	6.0 W	6.0 W	6.0 W	6.0 W	
100	7.5 W	7.5 W	7.5 W	7.5 W	
125	9.5 W	9.5 W	9.5 W	9.6 W	
160	10.7 W	12.0 W	12.7 W	12.7 W	
200		18.0 W	16.4 W	16.4 W	
224			21.5 W	18.7 W	
250			29.0 W	21.5 W	
315				29.0 W	25.0 W
355				32.0 W	29.0 W
400				34.0 W	34.0 W
425					38.5 W
500				45.0 W	45.0 W
630					60.0 W

Time/current characteristics

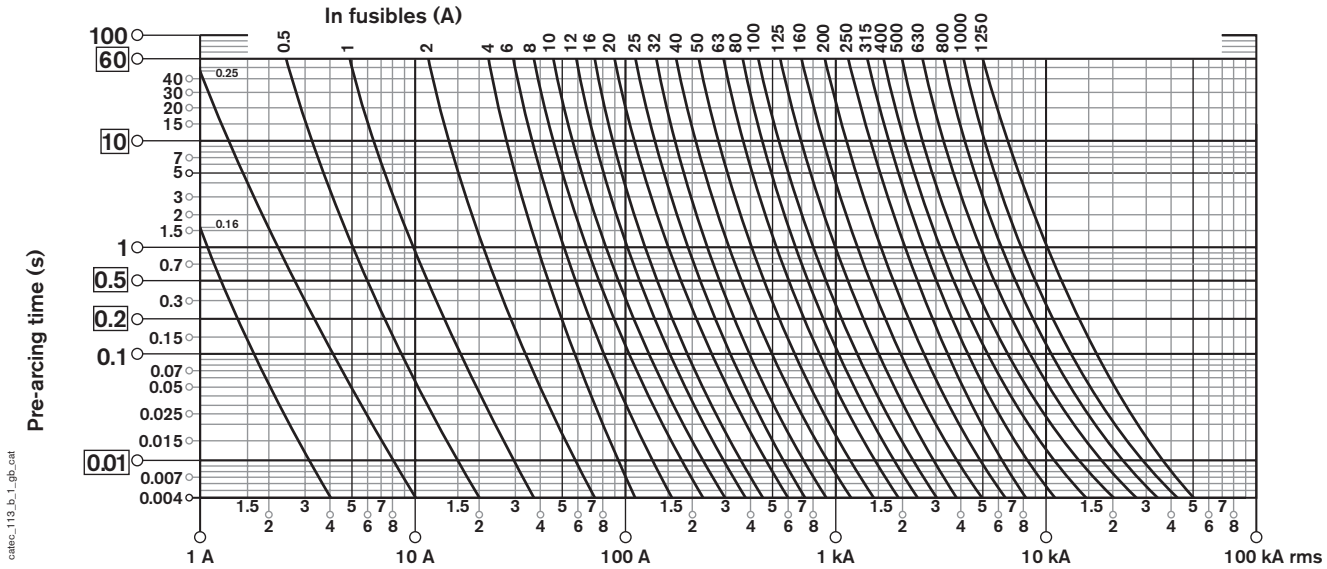

This document is not a contract. SOCOMEC reserves the right to modify features without prior notice in view of continued improvement. 2008 - 2009

High speed fuses (UR)
10 to 2000 A

Functions
References
Accessories
Dimensions

fusib_105_a_1_cat

Functions

High speed fuses (UR) protect power semi-conductors and DC circuits.

Conformity to standards

- IEC 60269-1
- IEC 60269-4
- NF EN 60269-1
- NF EN 60269-4
- DIN 43653
- DIN 43620
- BS 88-1
- BS 88-4

Approvals and certifications(1)

- UL “recognized”
- CSA

(1) Please consult us.

General characteristics

- Very high breaking capacity: 300 kA
  - low thermal constraint and current limitation,
  - very fast blowing.
- High resistance to cyclic loads.
- An auxiliary contact can be adapted for fuse blown indication.
- Following tests performed in its laboratory, SOCOMEC recommends FUSERBLOC or bases designed for UR fuses.

Available on request

- gR DIN 43620 fuses - Sizes 00 - 3.

This document is not a contract. SOCOMEC reserves the right to modify features without prior notice in view of continued improvement. 2008 - 2009

References

690 VAC UR fuses - Size 14 x 51

fusib_060_a_2_cat

fusib_061_a_2_cat

I_n rms value (A)	Pre-arcing I^2t when cold (A^2s)	Operating I^2t at 690 V rms (A^2s)	Losses at I_n (W)	Protection	Pack qty	14 x 51 without striker References	14 x 51 with striker References
5	8.6	11	1.5	aR	10	170N **1405**	
10	3.6	38.5	4	aR	10	170N **1410**	170L **1410**
15	8.6	70	5.5	aR	10	170N **1415**	170L **1415**
20	26	230	6	aR	10	170N **1420**	170L **1420**
25	46.5	375	7	aR	10	170N **1425**	170L **1425**
32	68	600	7.6	aR	10	170N **1432**	170L **1432**
40	84	750	8	aR	10	170N **1440**	170L **1440**
50	200	1800	9	aR	10	170N **1450**	170L **1450**

Accessories

Fuse combination switch recommended (see page A.200)	FUSERBLOC	FUSERBLOC
Fuse holder recommended (see page A.252)	RM 50	RMS 50

690 VAC UR fuses - Size 22 x 58

fusib_062_a_2_cat

fusib_063_a_2_cat

I_n rms value (A)	Pre-arcing I^2t when cold (A^2s)	Operating I^2t at 690 V rms (A^2s)	Losses at I_n (W)	Protection	Pack qty	22 x 58 without striker References	22 x 58 with striker References
20	19	260	5	aR	10	170N **2220**	170L **2220**
25	34	410	6	aR	10	170N **2225**	170L **2225**
32	53.5	605	8	aR	10	170N **2232**	170L **2232**
40	68	750	9	aR	10	170N **2240**	170L **2240**
50	135	1600	9.5	aR	10	170N **2250**	170L **2250**
63	280	3080	11	aR	10	170N **2263**	170L **2263**
80	600	6600	13.5	aR	10	170N **2280**	170L **2280**
100(1)	1100	12500	16	aR	10	170N **2299**	170L **2299**

(1) Voltage: 600 VAC (IEC) / 700 VAC (UL).

Accessories

Fuse combination switch recommended (see page A.200)	FUSERBLOC	FUSERBLOC
Fuse holder recommended (see page A.252)	RM 100	RMS 100

This document is not a contract. SOCOMEC reserves the right to modify features without prior notice in view of continued improvement. 2008 - 2009

High speed fuses (UR)
10 to 2000 A

References

690 VAC UR fuses - Size 0000

I_n rms value (A)	Pre-arcing I^2t when cold (A^2s)	Operating I^2t at 660 V rms (A^2s)	Losses at I_n (W)	Protection	DIN 43653(1)(5) Brackets References	F/65(2)(5) Brackets References
10	3.8	25.5	3.5	gR	170M **0158**	170M **0258**
16	8.5	56.5	4.5	gR	170M **0159**	170M **0259**
20	15	105	5	gR	170M **0160**	170M **0260**
25	23.5	160	8	gR	170M **0161**	170M **0261**
32	43.5	290	9	gR	170M **0162**	170M **0262**
40	77.5	515	11	gR	170M **0163**	170M **0263**
50	135	915	12	aR	170M **0164**	170M **0264**
63	260	1 750	13	aR	170M **0165**	170M **0265**
80	485	3 250	17	aR	170M **0166**	170M **0266**
100	860	5 700	18	aR	170M **0167**	170M **0267**
Accessory						
Fuse base recommended					170H **1007**	(3)

690 VAC UR fuses - Size 000

I_n rms value (A)	Pre-arcing I2t when cold (A2s)	Operating I^2t at 660 V rms (A^2s)	Losses at I_n (W)	Protection	T/80(5) Brackets References	F/70(2)(5) Brackets References	DIN 43620(6) Knife-edge References
10	3.8	25.5	3	gR	170M **1408**	170M **1508**	170M **1558**
16	7.2	48	5.5	gR	170M **1409**	170M **1509**	170M **1559**
20	11.5	78	7	gR	170M **1410**	170M **1510**	170M **1560**
25	19	130	9	gR	170M **1411**	170M **1511**	170M **1561**
32	40	270	10	gR	170M **1412**	170M **1512**	170M **1562**
40	69	460	12	gR	170M **1413**	170M **1513**	170M **1563**
50	115	770	15	gR	170M **1414**	170M **1514**	170M **1564**
63	215	1 450	16	gR	170M **1415**	170M **1515**	170M **1565**
80	380	2 550	19	aR	170M **1416**	170M **1516**	170M **1566**
100	695	4 650	24	aR	170M **1417**	170M **1517**	170M **1567**
125	1 200	8 500	28	aR	170M **1418**	170M **1518**	170M **1568**
160	2 300	16 000	32	aR	170M **1419**	170M **1519**	170M **1569**
200	4 200	28 000	37	aR	170M **1420**	170M **1520**	170M **1570**
250	7 750	51 500	42	aR	170M **1421**	170M **1521**	170M **1571**
315	12 000	80 500	52	aR	170M **1422**	170M **1522**	170M **1572**
Accessories							
Fuse blown auxiliary contacts					170H **0236**		170H **0236**
Fuse base recommended					170H **1007**	(3)	6500 **1010**(4)
Fuse combination switch recommended (see page A.200)							FUSERBLOC

(1) Without striker.
(2) With indicator.
(3) Direct mounting on busbar.
(4) Single-pole base 160 A Size 00 (see page A.256).
(5) UL / CSA.
(6) UL.

This document is not a contract. SOCOMEC reserves the right to modify features without prior notice in view of continued improvement. 2008 - 2009

References

690 VAC UR fuses - Size 00

I_n rms value (A)	Pre-arcing I^2t when cold (A^2s)	Operating I^2t at 660 V rms (A^2s)	Losses at I_n (W)	Protection	T/80 Brackets References	BT/60 Threaded bolted tag References
25	19	130	6	gR	170M **2658**	170M **2758**
32	28.5	195	7	gR	170M **2659**	170M **2759**
40	50	360	9	gR	170M **2660**	170M **2760**
50	95	640	10	gR	170M **2661**	170M **2761**
63	170	1 200	12	gR	170M **2662**	170M **2762**
80	310	2 100	15	gR	170M **2663**	170M **2763**
100	620	4 150	20	aR	170M **2664**(1)	170M **2764**
125	1 000	6 950	25	aR	170M **2665**(1)	170M **2765**
160	1 900	13 000	30	aR	170M **2666**(1)	170M **2766**
200	3 400	23 000	35	aR	170M **2667**(1)	170M **2767**
250	6 250	42 000	45	aR	170M **2668**(1)	170M **2768**
315	10 000	68 500	55	aR	170M **2669**(1)	170M **2769**
350	13 500	91 500	60	aR	170M **2670**(1)	170M **2770**
400	18 000	125 000	70	aR	170M **2671**(1)	170M **2771**

Accessories

Fuse blown auxiliary contact	170H **0235**	170H **0235**
Fuse base recommended	170H **1007**	(2)

690 VAC UR fuses - Size 0

I_n rms value (A)	Pre-arcing I^2t when cold (A^2s)	Operating I^2t at 660 V rms (A^2s)	Losses at I_n (W)	Protection	DIN 43620 Knife-edge References
16	3.8	25.5	5	aR	170M **7908**
20	7.2	48	6	aR	170M **7909**
25	11.5	78	7	aR	170M **7910**
32	23.5	160	8	aR	170M **7911**
40	40	270	9	aR	170M **7912**
50	77	515	11	aR	170M **7913**
63	115	770	14	aR	170M **7914**
80	185	1 250	18	aR	170M **7915**
100	360	2 450	21	aR	170M **7916**
125	550	3 700	26	aR	170M **7917**
160	1 100	7 500	30	aR	170M **7918**
200	2 200	15 000	35	aR	170M **7919**

Accessories

Fuse blown auxiliary contacts	170H **0236**
Fuse base recommended	6501 **1010**(3)
Fuse combination switch recommended (see page A.200)	FUSERBLOC

(1) UL.
(2) Direct mounting on busbar.
(3) Single-pole base 160 A Size 0 (see page A.256).

This document is not a contract. SOCOMEC reserves the right to modify features without prior notice in view of continued improvement. 2008 - 2009

High speed fuses (UR)
10 to 2000 A

References

690 VAC UR fuses Size 1*

I_n rms value (A)	Pre-arcing I^2t when cold (A^2s)	Operating I^2t at 660 V rms (A^2s)	Losses at I_n (W)	Protection	K/80[1] Notched References	K/110[1] Notched References	DIN 43620[6] Knife-edge References	EK/76[1] Notched References	BK/50[1] Threaded bolted tag References
40	40	270	9	aR	170M **3108**	170M **3258**	170M **3808**	170M **3358**	170M **3458**
50	77	515	11	aR	170M **3109**	170M **3259**	170M **3809**	170M **3359**	170M **3459**
63	115	770	14	aR	170M **3110**	170M **3260**	170M **3810**	170M **3360**	170M **3460**
80	185	1 250	18	aR	170M **3111**	170M **3261**	170M **3811**	170M **3361**	170M **3461**
100	360	2 450	21	aR	170M **3112**	170M **3262**	170M **3812**	170M **3362**	170M **3462**
125	550	3 700	26	aR	170M **3113**	170M **3263**	170M **3813**	170M **3363**	170M **3463**
160	1 100	7 500	30	aR	170M **3114**	170M **3264**	170M **3814**	170M **3364**	170M **3464**
200	2 200	15 000	35	aR	170M **3115**	170M **3265**	170M **3815**	170M **3365**	170M **3465**
250	4 200	28 500	40	aR	170M **3116**	170M **3266**	170M **3816**	170M **3366**	170M **3466**
315	7 000	46 500	50	aR	170M **3117**	170M **3267**	170M **3817**	170M **3367**	170M **3467**
350	10 000	68 500	55	aR	170M **3118**	170M **3268**	170M **3818**	170M **3368**	170M **3468**
400	15 000	105 000	60	aR	170M **3119**	170M **3269**	170M **3819**	170M **3369**	170M **3469**
450	21 000	140 000	65	aR	170M **3120**	170M **3270**		170M **3370**	170M **3470**
500	27 000	180 000	70	aR	170M **3121**	170M **3271**		170M **3371**	170M **3471**
550	34 000	230 000	75	aR	170M **3122**	170M **3272**			170M **3472**
630	48 500	325 000	80	aR	170M **3123**	170M **3273**			170M **3473**

Accessories

Fuse blown auxiliary contacts	170H **0069**	170H **0069**	170H **0235**	170H **0069**	170H **0069**
Fuse base recommended	170H **3004**	170H **3006**	6501 **1011**[2]	170A **0601**[3]	[4]
Fuse combination switch recommended (see page A.200)			FUSERBLOC		

690 VAC UR fuses Size 1

I_n valeur eff. (A)	Pre-arcing I^2t when cold (A^2s)	Operating I^2t at 660 V rms (A^2s)	Losses at I_n (W)	Protection	K/80[1] Notched References	K/110[1] Notched References	EK/86[1] Notched References	BK/50[1] Threaded bolted tag References
200	1 650	11 500	45	aR	170M **4108**	170M **4258**	170M **4358**	170M **4458**
250	3 100	21 000	55	aR	170M **4109**	170M **4259**	170M **4359**	170M **4459**
315	6 200	42 000	58	aR	170M **4110**	170M **4260**	170M **4360**	170M **4460**
350	8 500	59 000	60	aR	170M **4111**	170M **4261**	170M **4361**	170M **4461**
400	13 500	91 500	65	aR	170M **4112**	170M **4262**	170M **4362**	170M **4462**
450	17 000	120 000	70	aR	170M **4113**	170M **4263**	170M **4363**	170M **4463**
500	25 000	170 000	72	aR	170M **4114**	170M **4264**	170M **4364**	170M **4464**
550	34 000	230 000	75	aR	170M **4115**	170M **4265**	170M **4365**	170M **4465**
630	52 000	350 000	80	aR	170M **4116**	170M **4266**	170M **4366**	170M **4466**
700	69 500	465 000	85	aR	170M **4117**	170M **4267**	170M **4367**	170M **4467**
800	105 000	725 000	95	aR	170M **4118**	170M **4268**	170M **4368**	170M **4468**
900	155 000	850 000	100	aR	170M **4119**	170M **4269**		170M **4469**

Accessories

Fuse blown auxiliary contacts	170H **0069**	170H **0069**	170H **0069**	170H **0069**
Fuse base recommended	170H **3004**	170H **3006**	170A **0611**[5]	[4]

(1) UL / CSA.
(2) Single pole base 250 A Size 1 (see page A.256).
(3) I_{max} = 200 A.
(4) Direct mounting on busbar.
(5) I_{max} = 250 A.
(6) UL.

This document is not a contract. SOCOMEC reserves the right to modify features without prior notice in view of continued improvement. 2008 - 2009

References

690 VAC UR fuses Size 2

I_n rms value (A)	Pre-arcing I^2t when cold (A^2s)	Operating I^2t at 660 V rms (A^2s)	Losses at I_n (W)	Protection	K/80[1] Notched References	K/110[1] Notched References	DIN 43620[9] Knife-edge References	EK/91[1] Notched References	BK/50[1] Threaded bolted tag References
200	1 200	8 200	50	aR			170M **5804**		
250	2 450	16 500	55	aR			170M **5805**		
315	4 950	33 000	60	aR			170M **5806**		
350	7 000	46 500	60	aR			170M **5807**		
400	11 000	74 000	65	aR	170M **5108**	170M **5258**	170M **5808**	170M **5358**	170M **5458**
450	15 500	105 000	70	aR	170M **5109**	170M **5259**	170M **5809**	170M **5359**	170M **5459**
500	21 500	145 000	75	aR	170M **5110**	170M **5260**	170M **5810**	170M **5360**	170M **5460**
550	28 000	190 000	80	aR	170M **5111**	170M **5261**	170M **5811**	170M **5361**	170M **5461**
630	41 000	275 000	90	aR	170M **5112**	170M **5262**	170M **5812**	170M **5362**	170M **5462**
700	60 500	405 000	95	aR	170M **5113**	170M **5263**	170M **5813**	170M **5363**	170M **5463**
800	86 000	575 000	105	aR	170M **5114**	170M **5264**		170M **5364**	170M **5464**
900	125 000	840 000	110	aR	170M **5115**	170M **5265**		170M **5365**	170M **5465**
1 000	180 000	1 250 000	115	aR	170M **5116**	170M **5266**		170M **5366**	170M **5466**
1 100	245 000	1 600 000	120	aR	170M **5117**	170M **5267**			170M **5467**
1 250	365 000	2 400 000	130	aR	170M **5118**	170M **5268**			170M **5468**

Accessories

Fuse blown auxiliary contacts	170H **0069**	170H **0069**	170H **0235**	170H **0069**	170H **0069**
Fuse base recommended	170H **3004**	170H **3006**	6501 **1012**[2]	170A **0621**[3]	[4]
Fuse combination switch recommended (see page A.200)			FUSERBLOC		

690 VAC UR fuses Size 3

I_n rms value (A)	Pre-arcing I^2t when cold (A^2s)	Operating I^2t at 660 V rms (A^2s)	Losses at I_n (W)	Protection	K/80[1] Notched References	K/110[1] Notched References	DIN 43620[9] Knife-edge References	EK/91[1] Notched References	BK/50[1] Threaded bolted tag References
500	14 000	95 000	95	aR	170M **6108**	170M **6258**	170M **6808**	170M **6358**	170M **6458**
550	19 500	135 000	100	aR	170M **6109**	170M **6259**	170M **6809**	170M **6359**	170M **6459**
630	31 000	210 000	105	aR	170M **6110**	170M **6260**	170M **6810**	170M **6360**	170M **6460**
700	44 500	300 000	110	aR	170M **6111**	170M **6261**	170M **6811**	170M **6361**	170M **6461**
800	69 500	465 000	115	aR	170M **6112**	170M **6262**	170M **6812**	170M **6362**	170M **6462**
900	100 000	670 000	120	aR	170M **6113**	170M **6263**	170M **6813**	170M **6363**	170M **6463**
1 000	140 000	945 000	125	aR	170M **6114**	170M **6264**	170M **6814**	170M **6364**	170M **6464**
1 100	190 000	1 300 000	130	aR	170M **6115**	170M **6265**		170M **6365**	170M **6465**
1 250	290 000	1 950 000	140	aR	170M **6116**	170M **6266**		170M **6366**	170M **6466**
1 400	370 000	2 450 000	155	aR	170M **6117**	170M **6267**		170M **6367**	170M **6467**
1 500	460 000	3 100 000	160	aR	170M **6118**	170M **6268**		170M **6368**	170M **6468**
1 600	580 000	3 900 000	160	aR	170M **6119**	170M **6269**			170M **6469**
1 800	880 000	5 250 000	165	aR	170M **6120**[5]	170M **6270**[5]			170M **6470**[5]
2 000	1 150 000	6 350 000	175	aR	170M **6121**[6]	170M **6271**[6]			170M **6471**[6]

Accessory

Fuse blown auxiliary contacts	170H **0069**	170H **0069**	170H **0236**	170H **0069**	170H **0069**
Fuse base recommended	170H **3004**	170H **3006**	6501 **1013**[7]	170A **0632**[8]	[4]
Fuse combination switch recommended (see page A.200)			FUSERBLOC		FUSERBLOC

(1) UL / CSA. (2) Single pole base 400 A Size 2 (see page A.256). (3) I_{max} = 400 A. (4) Direct mounting on busbar. (5) Nominal voltage of 600 VAC. (6) Nominal voltage of 550 VAC. (7) Single pole base 630 A Size 3 (see page A.256). (8) I_{max} = 710 A. (9) UL.

This document is not a contract. SOCOMEC reserves the right to modify features without prior notice in view of continued improvement. 2008 - 2009

High speed fuses (UR)
10 to 2000 A

References

1250 VAC UR fuses - Size 1*

I_n rms value (A)	Pre-arcing I^2t when cold (A^2s)	Operating I^2t at 1250 V rms (A^2s)	Losses at I_n (W)	Protection	K/110[5] Notched References	BK/75[5] Threaded bolted tag References	BK/80[5] Threaded bolted tag References
50	135	1 100	15	aR	170M **3238**	170M **3388**	170M **3438**
63	215	1 750	20	aR	170M **3239**	170M **3389**	170M **3439**
80	420	3 350	25	aR	170M **3240**	170M **3390**	170M **3440**
100	750	5 950	30	aR	170M **3241**	170M **3391**	170M **3441**
125	1 450	11 500	35	aR	170M **3242**	170M **3392**	170M **3442**
160	2 600	21 000	40	aR	170M **3243**	170M **3393**	170M **3443**
200	5 150	41 000	45	aR	170M **3244**	170M **3394**	170M **3444**
250	9 200	73 000	55	aR	170M **3245**	170M **3395**	170M **3445**
315	18 500	150 000	60	aR	170M **3246**	170M **3396**	170M **3446**
350	27 000	220 000	65	aR	170M **3247**	170M **3397**	170M **3447**
400	53 000	335 000	70	aR	170M **3248**		170M **3448**
Accessories							
Fuse blown auxiliary contacts					170H **0069**	170H **0069**	170H **0069**
Fuse base recommended					170H **3006**	(1)	(1)

1250 VAC UR fuses - Size 1

I_n rms value (A)	Pre-arcing I^2t when cold (A^2s)	Operating I^2t at 1250 V rms (A^2s)	Losses at I_n (W)	Protection	K/110[5] Notched References	BK/75[5] Threaded bolted tag References	BK/80[5] Threaded bolted tag References
160	1 900	15 500	45	aR	170M **4238**	170M **4388**	170M **4438**
200	3 800	30 000	50	aR	170M **4239**	170M **4389**	170M **4439**
250	7 750	61 500	60	aR	170M **4240**	170M **4390**	170M **4440**
315	15 000	120 000	65	aR	170M **4241**	170M **4391**	170M **4441**
350	20 000	165 000	70	aR	170M **4242**	170M **4392**	170M **4442**
400	29 500	235 000	75	aR	170M **4243**	170M **4393**	170M **4443**
450	42 000	335 000	80	aR	170M **4244**	170M **4394**	170M **4444**
500	69 500	435 000	85	aR	170M **4245**	170M **4395**[2]	170M **4445**
550	95 000	590 000	95	aR	170M **4246**	170M **4396**[3]	170M **4446**
630	130 000	600 000[4]	100	aR	170M **4247**[2]	170M **4397**[3]	170M **4447**[2]
Accessories							
Fuse blown auxiliary contacts					170H **0069**	170H **0069**	170H **0069**
Fuse base recommended					170H **3006**	(1)	(1)

(1) Direct mounting on busbar.
(2) Nominal voltage of 1100 VAC.
(3) Nominal voltage of 1000 VAC.
(4) Operating I^2t at 1000 V rms (A^2s).
(5) UL.

This document is not a contract. SOCOMEC reserves the right to modify features without prior notice in view of continued improvement. 2008 - 2009

References

1250 VAC UR fuses - Size 2

I_n rms value (A)	Pre-arcing I^2t when cold (A^2s)	Operating I^2t at 1250 V rms (A^2s)	Losses at I_n (W)	Protection	K/110[5] Notched References	BK/75[5] Threaded bolted tag References	BK/80[5] Threaded bolted tag References
250	6 500	51 500	65	aR	170M **5238**	170M **5388**	170M **5438**
280	9 350	74 500	70	aR	170M **5239**	170M **5389**	170M **5439**
315	13 000	105 000	75	aR	170M **5240**	170M **5390**	170M **5440**
350	16 500	135 000	80	aR	170M **5241**	170M **5391**	170M **5441**
400	23 000	180 000	85	aR	170M **5242**	170M **5392**	170M **5442**
450	34 000	270 000	90	aR	170M **5243**	170M **5393**	170M **5443**
500	48 000	380 000	95	aR	170M **5244**	170M **5394**	170M **5444**
550	62 000	495 000	100	aR	170M **5245**	170M **5395**	170M **5445**
630	115 000	730 000	110	aR	170M **5246**	170M **5396**[1]	170M **5446**
700	160 000	1 050 000	115	aR	170M **5247**	170M **5397**[2]	170M **5447**[1]
800	245 000	1 550 000	120	aR	170M **5248**	170M **5398**[2]	170M **5448**[2]
900	360 000	1 750 000	125	aR	170M **5249**[1]		
1 000	480 000	2 350 000	135	aR	170M **5250**[1]		

Accessories

Fuse blown auxiliary contacts	170H **0069**	170H **0069**	170H **0069**
Fuse base recommended	170H **3006**	[3]	[3]

1250 VAC UR fuses - Size 3

I_n rms value (A)	Pre-arcing I^2t when cold (A^2s)	Operating I^2t at 1250 V rms (A^2s)	Losses at I_n (W)	Protection	K/110[5] Notched References	BK/75[5] Threaded bolted tag References	BK/80[5] Threaded bolted tag References
315	9 500	77 500	85	aR	170M **6238**	170M **6338**	170M **6538**
350	13 500	110 000	90	aR	170M **6239**	170M **6339**	170M **6539**
400	19 500	160 000	95	aR	170M **6240**	170M **6340**	170M **6540**
450	31 000	245 000	100	aR	170M **6241**	170M **6341**	170M **6541**
500	39 000	310 000	105	aR	170M **6242**	170M **6342**	170M **6542**
550	55 000	435 000	110	aR	170M **6243**	170M **6343**	170M **6543**
630	83 500	665 000	115	aR	170M **6244**	170M **6344**	170M **6544**
700	115 000	940 000	120	aR	170M **6245**	170M **6345**	170M **6545**
800	205 000	1 300 000	125	aR	170M **6246**	170M **6346**[1]	170M **6546**
900	305 000	1 900 000	130	aR	170M **6247**	170M **6347**[2]	170M **6547**[1]
1 000	450 000	2 750 000	135	aR	170M **6248**	170M **6348**[2]	170M **6548**[1]
1 100	575 000	3 600 000	140	aR	170M **6249**	170M **6349**[2]	170M **6549**[2]
1 250	810 000	3 950 000[4]	145	aR	170M **6250**[1]		
1 400	1 250 000	6 000 000[4]	150	aR	170M **6251**[1]		

Accessories

Fuse blown auxiliary contacts	170H **0069**	170H **0069**	170H **0069**
Fuse base recommended	170H **3006**	[3]	[3]

(1) Nominal voltage of 1100 VAC.
(2) Nominal voltage of 1000 VAC.
(3) Direct mounting on busbar.
(4) Operating I^2t at 1000 V rms (A^2s).
(5) UL.

This document is not a contract. SOCOMEC reserves the right to modify features without prior notice in view of continued improvement. 2008 - 2009

High speed fuses (UR)
10 to 2000 A

Accessories

Fuse blown auxiliary contacts

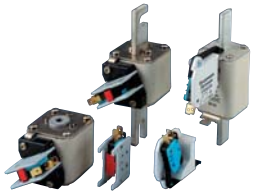

Connection
Fast-on terminal 6.3 x 0.8 mm.

Electrical principle
An auxiliary contact detects when the fuse has blown.

References
(see pages “References”)

Electrical characteristics

Voltage (VAC)	Nominal current (A)
250	2

Dimensions

690 VAC UR fuses

• **14 x 51 and 22 x 58**

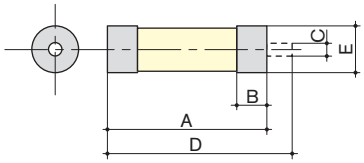

Size	A	B	C	D	E
14 x 51	51	11	4	59	ø 14.3
22 x 58	58	15	4	66	ø 22.2

• **DIN 43653 and T/80**

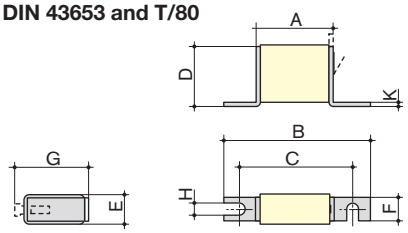

Size	A	B	C	D	E	F	G	H	K
0000	54	100	78	19	18	17		8	1.5
000	54	100	78	40	21	20	51	8	2
00	54	100	78	51	30	28	67	10	2

• **F/65 and F/70**

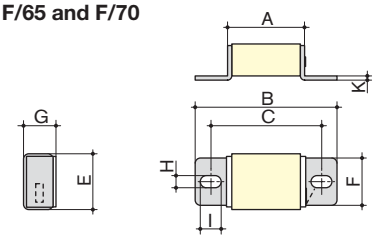

Size	A	B	C	E	F	G	H	I	K
0000	54	78	65	18	13	19	7	10	1.5
00	54	95	70	36	32	23	9	10	2

• **DIN 43620**

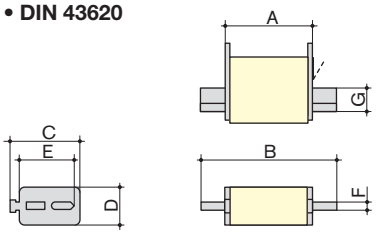

Size	A	B	C	D	E	F	G
000	54	79	48	21	35	6	15
0	68	125	60	35	35	6	15
1*	71	135	58	45	40	6	20
2	72	150	71	55	48	6	26
3	72	150	88	76	60	6	33

• **BT/60**

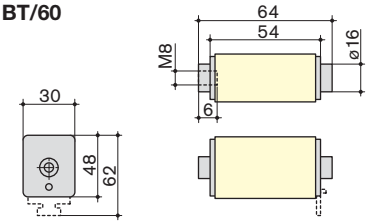

This document is not a contract. SOCOMEC reserves the right to modify features without prior notice in view of continued improvement. 2008 - 2009

Dimensions

690 VAC UR fuses

• **K/80 and K/110**

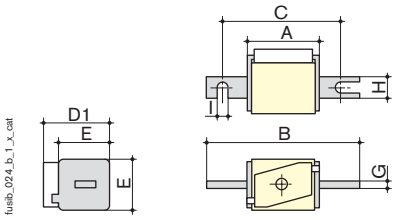

K/80 - Size	A	B	C	D_1	E	G	H	I
1*	50	104	78	59	45	6	22	11
1	50	108	78	69	53	6	25	11
2	50	108	78	77	61	6	25	11
3	51	109	78	92	76	6	30	11

K/110 - Size	A	B	C	D_1	E	G	H	I
1*	50	134	108	59	45	6	22	11
1	50	138	108	69	53	6	25	11
2	50	138	108	77	61	6	25	11
3	51	139	108	92	76	6	30	11

• **EK/76, EK/86 and EK/91**

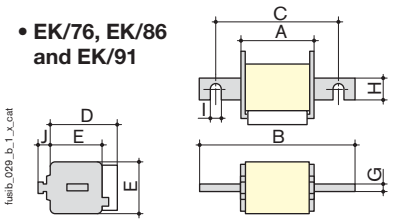

Size	A	B	C	D	E	G	H	I	J
1*	50	102	76	59	45	6	18	9	13
1	50	111	86	69	53	6	25	11	11
2	50	126	91	77	61	6	30	13	12
3	51	126	91	92	76	6	36	13	13

• **BK/50**

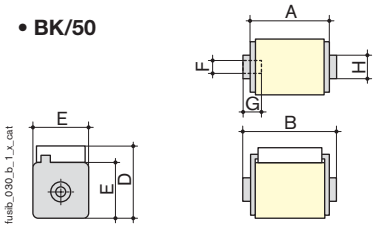

Size	A	B	D	E	F	G	H
1*	50	51	59	45	M8	5	ø 17
1	50	51	59	53	M8	8	ø 20
2	50	51(1)	77	61	M10	10	ø 24
3	51	53(2)	92	76	M12	10	ø 30

(1) B = 65 mm for ratings 1100 to 1250 A.
(2) B = 65 mm for ratings 1600 to 2000 A.

1250 VAC UR fuses

• **K/110**

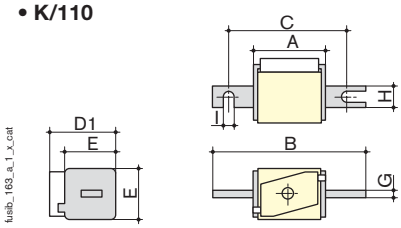

Size	A	B	C	D_1	E	G	H	I
1*	80	138	108	59	45	6	20	11
1	80	138	108	69	53	6	25	11
2	80	138	108	77	61	6	25	11
3	81	139	108	92	76	6	30	11

• **BK/75 and BK/80**

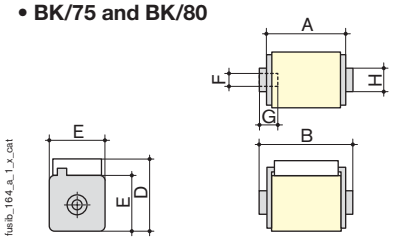

BK/75 - Size	A	B	D	E	F	G	H
1*	74	75	59	45	M8	5	ø17
1	74	75	69	53	M8	8	ø20
2	74	75	77	61	M10	10	ø24
3	74	76	92	76	M12	10	ø30

BK/80 - Size	A	B	D	E	F	G	H
1*	80	81	59	45	M8	5	ø17
1	80	81	69	53	M8	8	ø20
2	80	81	77	61	M10	10	ø24
3	81	83	92	76	M12	10	ø30

This document is not a contract. SOCOMEC reserves the right to modify features without prior notice in view of continued improvement. 2008 - 2009

RM - RMS
32 to 100 A

- Functions
- References
- Accessories
- Characteristics
- Dimensions

rm_043_c_1_cat

rm_049_a_2_cat

Functions

RM and **RMS** are modular fuse disconnect switches for cylindrical fuses.
They provide safety disconnection and protection against overcurrents in any low voltage electrical circuit.

RM: fuse disconnect switches without signalisation (for fuses without striker).

RMS: fuse disconnect switches with pre-break, presence, fuse blown and position signalisation auxiliary contact.

Conformity to standards

- IEC 60269-2-1
- IEC 60269-1
- IEC 60269-2
- NF EN 60269-1
- NF C 63-210
- NF C 63211
- VDE 0636-10
- DIN 43620

For RM 32 (1P, 1P+N, 2P, 3P, 3P+N) :
- CAN/CSA C22-2 n° 0-M91 (R2001)
- CSA Std C22-2 n° 39-M1987
- CSA Std C22-2 n° 65-93
- UL listed, File E307648.

Approvals and certifications

- Bureau Véritas.

General characteristics

- Omnipolar, simultaneous breaking.
- High dielectric strength.
- Modular DIN 45 mm cut-out.

This document is not a contract. SOCOMEC reserves the right to modify features without prior notice in view of continued improvement. 2008 - 2009

References

rm_049_a_1_cat

rm_034_a_2_cat

rm_035_a_2_cat

Rating	32 A	50 A	100 A
Fuse size	10 x 38	14 x 51	22 x 58

RM - Device without signalisation

No. of poles	Pack qty	References	Pack qty	References	Pack qty	References
1 P	12	5601 **0015**	6	5602 **5001**	6	5603 **5001**
N	12	5601 **0016**	6	5602 **5000**	6	5603 **5000**
1 P + N (2 modules)	6	5601 **0017**	3	5602 **5005**	3	5603 **5005**
1 P + N (1 module)	12	5601 **5005**				
2 P	6	5601 **0020**	3	5602 **5002**	3	5603 **5002**
3 P	4	5601 **0018**	2	5602 **5003**	2	5603 **5003**
3 P + N	3	5601 **0019**	1	5602 **5004**	1	5603 **5004**
4 P			1	5602 **5006**	1	5603 **5006**

RMS - Device with signalisation auxiliary contact(1)

1 P	1 AC		6	5602 **5011**	6	5603 **5011**
2 P	2 AC		3	5602 **5012**	3	5603 **5012**
3 P	1 AC		2	5602 **5013**	2	5603 **5013**
3 P + N	1 AC		1	5602 **5014**	1	5603 **5014**
4 P	2 AC				1	5603 **5016**

(1) The signalisation auxiliary contact provides the pre-break, fuse presence and also signals a blown fuse.

Accessories

Coupling system

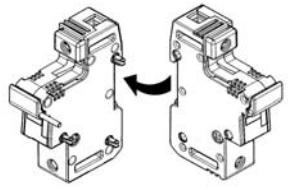
rm_030_a_1_x_cat

acces_227_a

Use
To link together multiple single-pole RM-RMS.

References
For RM and RMS

Rating (A)	References
32	5604 **0003**(1)
50	5602 **9020**(1)
100	5603 **9020**(1)

(1) One reference = 1 batch of 10 coupling system.
A coupling up allows to couple 2 RM/RMS.

Handle key interlocking accessories

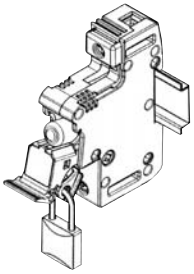
rm_038_a_1_x_cat

Use
Padlocking of the handle (padlock not supplied).

Reference
For RM and RMS

Rating (A)	Reference
50 … 100	standard

This document is not a contract. SOCOMEC reserves the right to modify features without prior notice in view of continued improvement. 2008 - 2009

RM - RMS
32 to 100 A

Accessories

Auxiliary contact for RMS

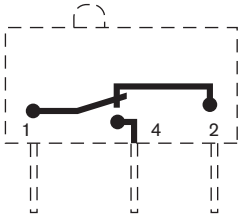

acces_068_a_1_x_cat

rm_050_a

rm_051_a

Use
Pre-break, presence and fuse blown for RMS 50 and 100:
1 or 2 NO/NC auxiliary contacts.

Connection
By fast-on terminal 6.35 mm.

References

NO/NC contact

Rating (A)	Contacts	References
50	1 AC 1 P	5602 **9901**
50	1 AC 3 P	5602 **9903**
50	2 AC 3 P	5602 **9030**
100	1 AC 1 P	5603 **9901**
100	1 AC 3 P	5603 **9903**
100	2 AC 3 P	5603 **9030**

Two-level NO/NC contact

Rating (A)	Contacts	References
50	1 AC 1 P	5602 **9911**
50	1 AC 3 P	5602 **9913**
100	1 AC 1 P	5603 **9911**
100	1 AC 3 P	5603 **9913**

Characteristics

NO/NC contact

Rating (A)	Operating current I_e (A) 250 VAC AC-13
50 … 100	5

Two-level NO/NC contact

Rating (A)	Operating current I_e (A) 250 VAC AC-13
50 … 100	0.1

This document is not a contract. SOCOMEC reserves the right to modify features without prior notice in view of continued improvement. 2008 - 2009

Characteristics

Thermal current I_{th} (20 °C)	**32 A**	**50 A**	**100 A**
Fuse size	10 x 38	14 x 51	22 x 58
Rated insulation voltage U_i (V)	500(5)	690	690
Fuse rating (A)			**gG / aM**
At 400 VAC	32	50	100 / 125
At 500 VAC	32	50	100 / 125
At 690 VAC		50	100 / 125
Fuse protected short-circuit withstand (kA rms prospective)			
Prospective short-circuit current (kA rms)(1)	100	100	100
Design current derating coefficient for N pole side by side			
N = 1 … 3	1	1	1
N = 4 … 6	0.8	0.8	0.8
N = 7 … 9	0.7	0.7	0.7
N ≥ 10	0.6	0.6	0.6
Connection			
Minimum Cu cable section (mm²)	4	2.5	2.5
Maximum Cu cable section (mm²)	25(2)/16(3)	35(2)/25(3)	50(2)/35(3)
Maximum Cu cable section (mm²) (4)	16(2)/10(3)	-	-
Mechanical characteristics			
Weight of 1 P or N (kg)	0.1	0.15	0.21
Weight of 1 P + N (kg)		0.31	0.44
Weight of 3 P + N (kg)		0.70	1.10

(1) For a rated operating voltage U_e = 400 VAC.
(2) Rigid cable.
(3) Flexible cable.
(4) Connection for the RM 32 1 P + N (1 module).
(5) For the RM 32 1 P + N (1 module), U_i = 400 V.

Dimensions

• RM 32 A

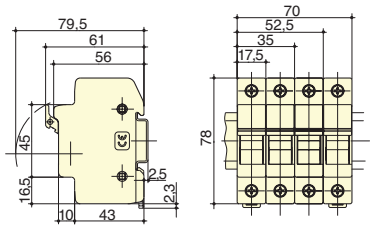

rm_047_b_1_x_cat

• RM / RMS 50 A

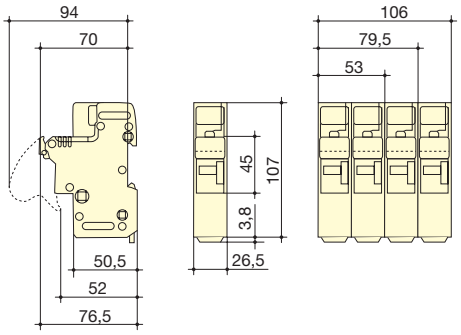

rm_027_a_1_x_cat

• RM / RMS 100 A

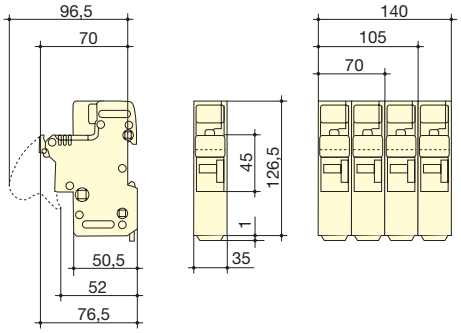

rm_028_a_1_x_cat

This document is not a contract. SOCOMEC reserves the right to modify features without prior notice in view of continued improvement. 2008 - 2009

Fuse bases
160 to 2500 A

socle_046_b_1_cat

socle_066_b_1_cat

socle_058_a_1_cat

socle_016_c_1_x_cat

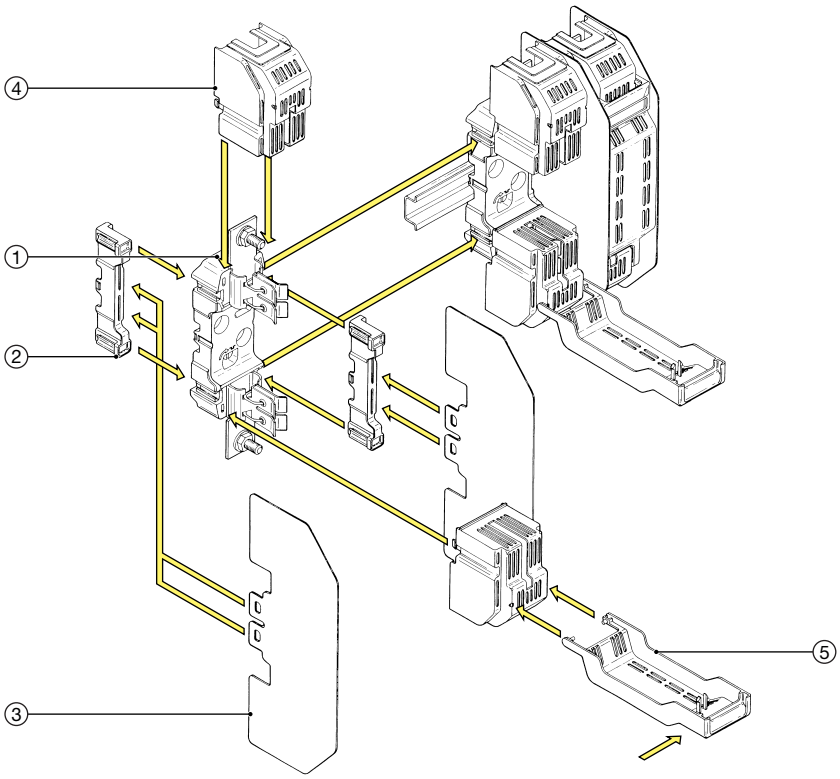

Functions

SOCOMEC **fuse bases** provide fixed, unipolar or multipolar support for knife edge fuses.

Conformity to standards

- IEC 60269-1
- IEC 60269-2
- IEC 60269-2-1
- NF EN 60269-1
- NF C 63211
- VDE 0636-10
- DIN 43620

Approvals and certifications(1)

- Bureau Véritas
- Lloyd's Register of Shipping

(1) Please consult us.

General characteristics

- High dielectric strength.

1. Bases
2. Connecting block:
   - block for assembling unipolar bases T00, T0, T1, T2 and T3
   - screen support for phases T00, T0, T1, T2 and T3
3. Phase separation shield
4. Terminal shrouds (mandatory for mounting fuse covers)
5. Fuse cover (provides IP2 protection for any brand of fuse)

IP20 KIT:

- unipolar = 2 connecting blocks + 2 phase separation shields + 2 terminal shrouds + 1 fuse cover
- tripolar = 2 connecting blocks for the ends + 2 phase separation shields for the ends + 6 terminal shrouds + 3 fuse covers

This document is not a contract. SOCOMEC reserves the right to modify features without prior notice in view of continued improvement. 2008 - 2009

▶ *Bases for fuses without a striker from 160 to 630 A (U = 690 V)*

References

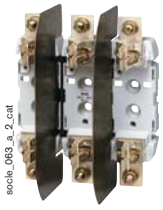

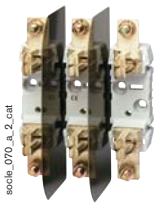

Rating		160 A	160 A	250 A	400 A	630 A
Fuse size		**00**	**0**	**1**	**2**	**3**
Back plate mounted device						
No. of poles	Pack qty	References	References	References	References	References
1 P	3	6500 **1010**	6501 **1010**	6501 **1011**	6501 **1012**	6501 **1013**
3 P	1	6500 **1030**	6501 **1030**	6501 **1031**	6501 **1032**	6501 **1033**
DIN rail-mounted device						
1 P	3	6500 **1110**	6501 **1110**	6501 **1111**	6501 **1112**	6501 **1113**
3 P	1	6500 **1130**	6501 **1130**	6501 **1131**	6501 **1132**	6501 **1133**

Options

IP20 kit						
1 P(1)		6510 **1010**	6511 **1010**	6511 **1011**	6511 **1012**	6511 **1013**
3 P(2)		6510 **1030**	6511 **1030**	6511 **1031**	6511 **1032**	6511 **1033**

(1) IP20 single-pole kit consisting of 2 connecting blocks, 2 phase separation shields, 2 terminal shrouds and 1 fuse cover.
(2) IP20 three-pole kit consisting of 2 connecting blocks for the ends, 2 phase separation shields for the ends, 6 terminal shrouds and 3 fuse covers.

Accessories

	Pack qty	References	References	References	References	References
Connecting block - set of 1 piece	2	6500 **0033**	6500 **0030**	6500 **0031**	6500 **0031**	6500 **0032**
Phase separation shield - set of 1 piece	2	6500 **0001**	6500 **0002**	6500 **0003**	6500 **0003**	6500 **0004**
Terminal shrouds - set of 1 piece	6	6500 **0010**	6500 **0011**	6500 **0012**	6500 **0013**	6500 **0014**
Fuse cover - set of 1 piece	3	6500 **0020**	6500 **0021**	6500 **0022**	6500 **0022**	6500 **0023**

Dimensions

• Fuse base 160 A size 00

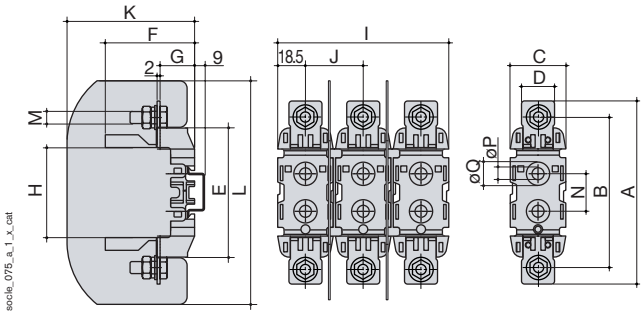

• Fuse base 160 A sizes 0 - 1 - 2 - 3

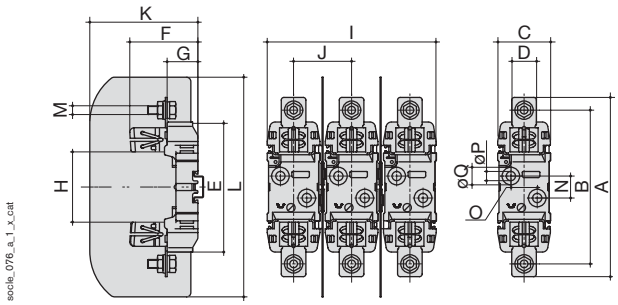

Rating (A)	Fuse size	A	B	C	D	E	F	G	H	I	J	K	L	M	N	O	P	Q
160	00	122	100	37	22	86	59.5	23	-	114	38.5	85	-	M8	25	-	8	-
160	0	170	150	47	24	122	63	29	74	144	48.5	91.5	185	M8	25	-	7.5	15
250	1	200	175	60	28	148	77.5	35	80	192	66	123	250	M10	25	30	10.5	20.5
400	2	225	200	60	32	148	88	35	80	192	66	123	250	M12	25	30	10.5	20.5
630	3	240	210	60	38	148	97	35	80	224	82	143	270	M12	25	30	10.5	20.5

This document is not a contract. SOCOMEC reserves the right to modify features without prior notice in view of continued improvement. 2008 - 2009

Fuse bases
160 to 2500 A

Unipolar fuse bases for fuses with a striker from 160 to 630 A (U = 690 V)

References

Rating Fuse size	160 A 0	250 A 1	400 A 2	630 A 3
Back plate mounted device without AC				
No. of poles	References	References	References	References
1 P	6501 **1010**	6501 **1011**	6501 **1012**	6501 **1013**
DIN rail-mounted accessory without AC				
1 P	6501 **1110**	6501 **1111**	6501 **1112**	6501 **1113**
Accessories				
Presence and fuse blown signalling AC (DDMM)				
1 P	6500 **0040**	6500 **0041**	6500 **0042**	6500 **0043**
Characteristics				
NO/NC contact				
Nominal current I_n (A) - 250 VAC	16	16	16	16

Dimensions

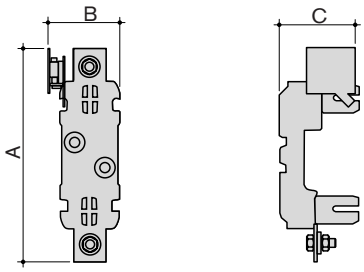

Rating (A)	Fuse size	A	B	C
160	0	193	65.5	90
250	1	215	76	98
400	2	227	76	102
630	3	235	76	102

Multipolar fuse bases for fuses with a striker from 160 to 400 A (U = 690 V)

References

Rating Fuse size	160 A 0	250 A 1	400 A 2
Back plate mounted device with presence and fuse blown signalling AC (DDMM)			
No. of poles	References	References	References
2 P	6301 **2016**	6301 **2024**	6301 **2039**
3 P	6301 **3016**	6301 **3024**	6301 **3039**
4 P	6301 **4016**	6301 **4024**	6301 **4039**
Accessories			
Fuse blown signalling auxiliary contact			
1st AC	standard	standard	standard
2nd AC	3994 **1901**	3994 **1901**	3994 **1901**
Terminal shrouds (1 piece)			
2 P	3998 **2016**	3998 **2025**	3998 **2025**
3 P	3998 **3016**	3998 **3025**	3998 **3025**
4 P	3998 **4016**	3998 **4025**	3998 **4025**

This document is not a contract. SOCOMEC reserves the right to modify features without prior notice in view of continued improvement. 2008 - 2009

▶ *Multipolar fuse bases for fuses with a striker from 160 to 400 A (U = 690 V)*

Dimensions

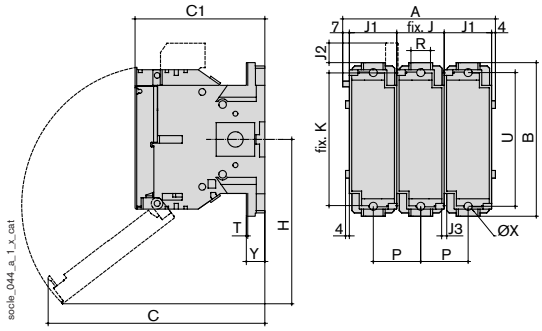

Rating (A)	Fuse size	A 2p.	3p.	4p.	B	C	C1	H	J	J1	J2	J3	K	P	R	T	U	ØX	Y
160	0	111	161	211	162	229	136.5	174	50	60	20.5	5.4	140	50	20	2.5	141	8.5	19.5
250	1	131	131	251	195	251	146	185	60	60	7.5	6.4	162	60	32	2.5	166	11	19.5
400	2	143	209	275	205	260	149	200	66	66	2.5	6.4	172	66	50	3	175	11	20

▶ *Fuse bases for fuses with or without a striker from 1 000 to 2 500 A (U = 690 V)*

References

Rating Fuse size	1 000 A 4	1 250 A 4	2 500 A 2 x 4	2 500 A 2 x 4 (S)	2 500 A 6
Device without presence and fuse blown signalling (DDMM)					
No. of poles	References	References	References	Reference	Reference
1 P	6431 **0004**	6431 **0005**	6431 **0006**		6431 **0007**(1)

(1) Without solid link.

Device with presence and fuse blown signalling (DDMM)					
1 P	7304 **0001**	7305 **0001**	7306 **0001**	6433 **0005**	

Dimensions

• 1000 and 1250 A fuse base, size 4A

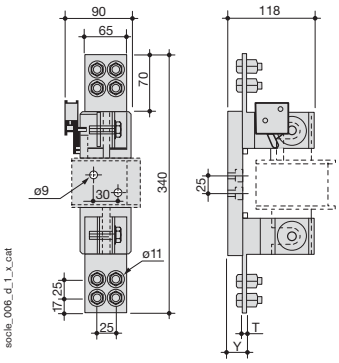

Rating (A)	Y (mm)	T (mm)
1000	25	4
1250	30	9

• 2500 A fuse base, size 2x4

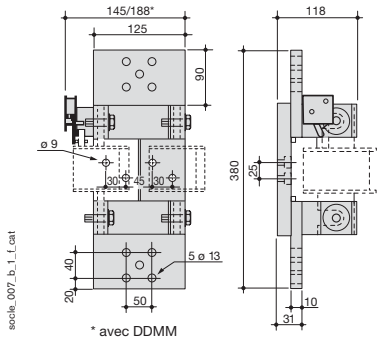

* avec DDMM

• 2500 A fuse base, size 2 x 4 (S)

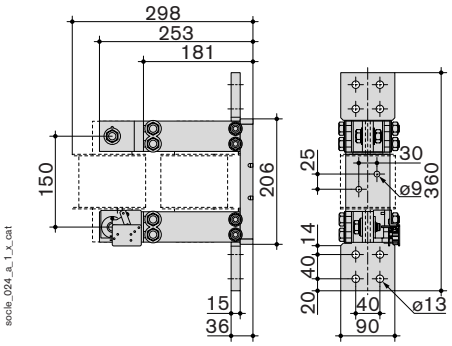

• 2500 A fuse base, size 6 (for neutral)

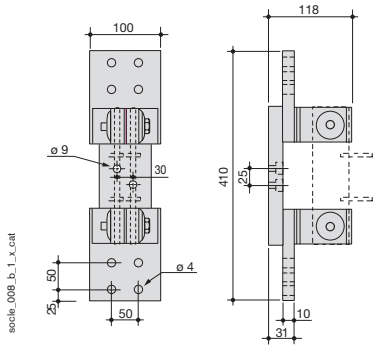

This document is not a contract. SOCOMEC reserves the right to modify features without prior notice in view of continued improvement. 2008 - 2009

Fuse bases
160 to 2500 A

Unipolar fuse bases for UR fuses

References

		690 VAC	1 000 VAC	1 400 VAC
L shape bracket 00/80 (distance between centres 80)				
Thermal current I_{th} à 40 °C (A)	Fuse type	References	References	Reference
200	00 bolted connection	170A **6080**		
400	00 bolted connection		170H **1007**	
L shape bracket 00/110 (distance between centres 110)				
200	00 bolted connection	170A **6110**	170A **1110**	
Knife-edge fuses /80 (distance between centres 80)				
1250(1)	from 1* to 3		170H **3004**	
Knife-edge fuses /110 (distance between centres 110)				
200	1* clamp connection	170A **0101**		
250	1 clamp connection	170A **0111**		
400	2 clamp connection	170A **0121**		
710	3 bolted connection		170A **0132**	
1250(1)	from 1* to 3			170H **3006**
EK knife-edge fuses				
200	1* clamp connection	170A **0601**		
250	1 clamp connection	170A **0611**		
400	2 clamp connection	170A **0621**		
710	3 bolted connection	170A **0632**		

(1) For current > 1250 A, please consult us.

Dimensions

• **L shape bracket 00/80 - 200 A - 1000 VAC -** Ref.: 170H 1007

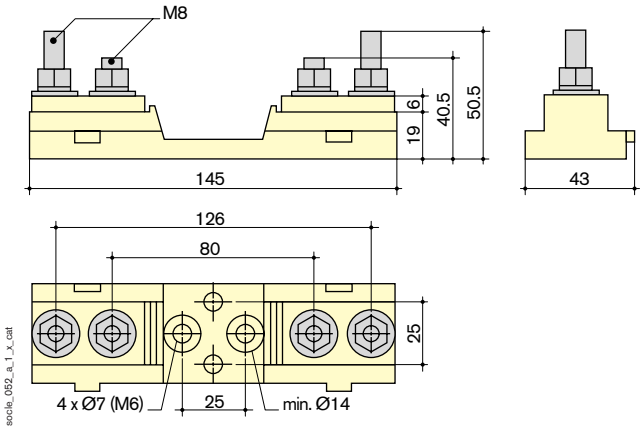

• **L shape bracket 00/110 - 200 A - 690 VAC -** Ref.: 170A 6110

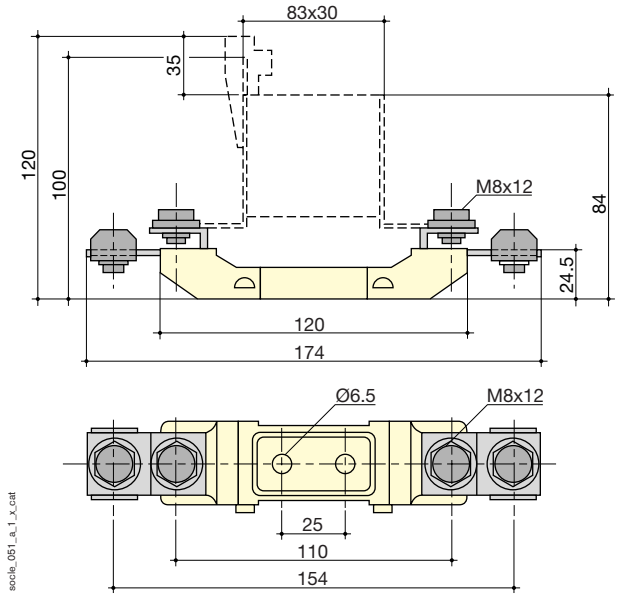

This document is not a contract. SOCOMEC reserves the right to modify features without prior notice in view of continued improvement. 2008 - 2009

Dimensions

• **Knife edge /80 - 1250 A - 1000 VAC -** Ref.: 170H 3004

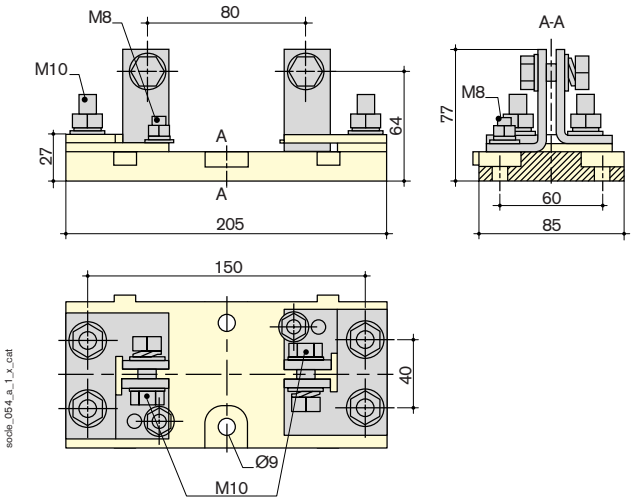

• **Knife edge /110 - 200 A - 690 VAC -** Ref.: 170A 0101

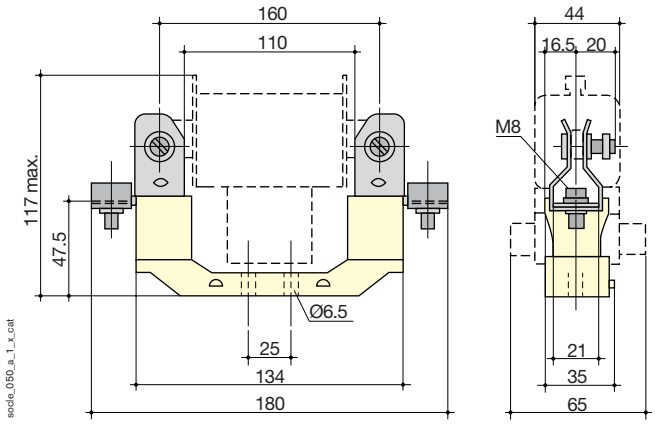

• **Knife edge /110 - 250 A - 690 VAC -** Ref.: 170A 0111

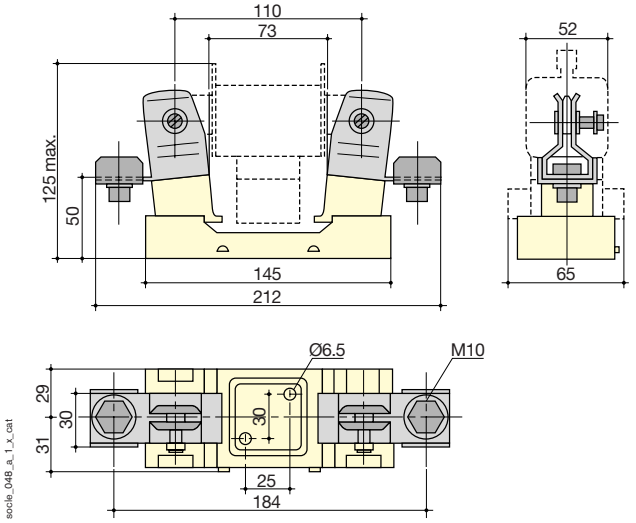

• **Knife edge /110 - 400 A - 690 VAC -** Ref.: 170A 0121

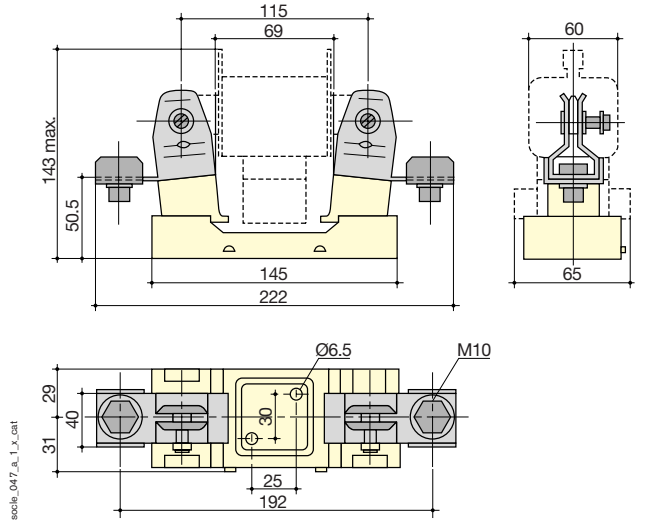

• **Knife edge /110 - 710 A - 690 VAC -** Ref.: 170A 0132

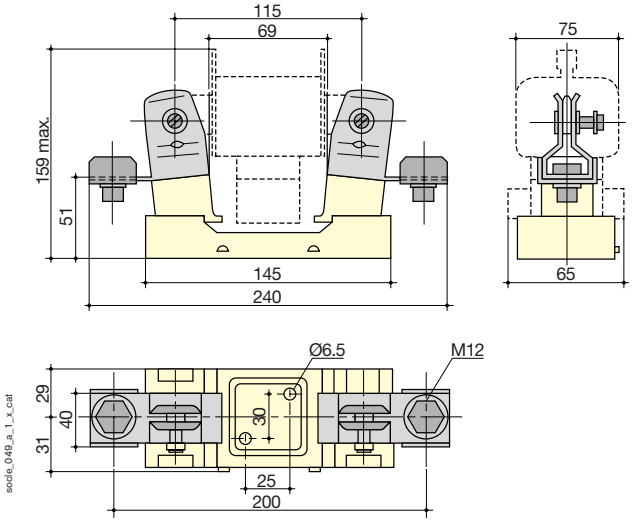

• **Knife edge /110 - 1250 A - 1400 VAC -** Ref.: 170H 3006

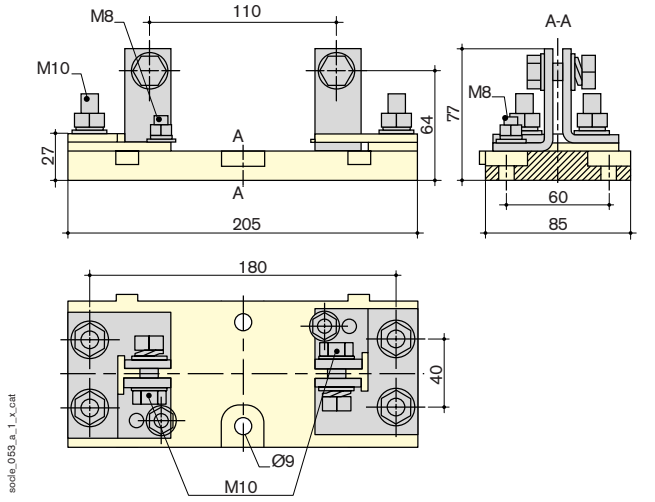

This document is not a contract. SOCOMEC reserves the right to modify features without prior notice in view of continued improvement. 2008 - 2009

SELECTION GUIDE

UL / CSA RANGE

APPLICATIONS

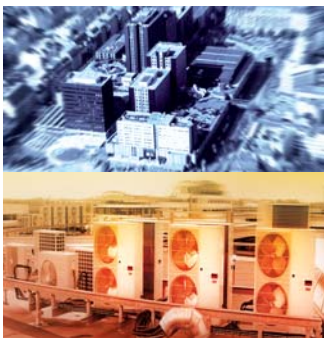

- Wiring systems
- Section incomers
- Section feeders
- Emergency breaking
- Generator set output
- Network coupling
- Local safety breaking
- Machine control
- Motor circuits

CHARACTERISTICS

STANDARD

- UL 98
- UL 508
- UL list - 248
- DC list - UL 198
- CSA C22.2

DIRECT HANDLE

- Front
- Side
- Door mounting

DOOR INTERLOCKED EXTERNAL HANDLE

- Front - Rotary
- Side - Rotary

access_150_a_1_cat

- Side - Flange

sirco_246_a_1_cat

BREAKING

- Fully visible
- Visible

PAGES

This document is not a contract. SOCOMEC reserves the right to modify features without prior notice in view of continued improvement. 2008 - 2009

NON FUSE DISCONNECTS		FUSE DISCONNECTS		
como_059_a_2_cat	sirco_093_a_1_cat	fuser_367_a_2_cat	fusib_132_a_2_cat	
LBS UL 16 to 125 A	**SIRCO UL 30 to 1200 A**	**FUSERBLOC UL 30 to 800 A**	**UL fuses 0.25 to 800 A**	
			•	
•	•	•	•	
•	•	•		
•	•			
	•			
	•			
•	•			
•				
		•	•	
				DIRIS A20
	•	•		
•				
			•	
			•	
•			•	
•	•	•		
	•	•		
•				
				see page B.50
•	•	•		
	•			
				DIRIS A40/A41
		up to 400 A		
				diris_561_b_2_cat
•	•	•		
	•			
see page A.264	see page A.274	see page A.290	see page A.308	see page B.54

This document is not a contract. SOCOMEC reserves the right to modify features without prior notice in view of continued improvement. 2008 - 2009

LBS UL
16 to 125 A
(North American market)

Functions
References
Accessories
Characteristics
Dimensions

como_061_a_1_cat

como_059_a_2_cat

como_063_a_2_cat

Functions

The **LBS R & M** range ensures making or breaking on load and safety isolation for low voltage electrical circuits, particular for machine control circuit up to 600 V.

Conformity to standards

- UL 508 listed, Guide NLRV, file E173959
- CSA 22.2 §14, Class 3211-05, file 223437
- IEC 60947-3

General characteristics

LBS R range:
- rating 3 pole from 30 to 125 A and 4 pole from 30 to 40 A,
- suitable as motor disconnect,
- back plate or door mounted,
- direct or external handle (padlockable in ON position),
- double breaking per phase,
- fully visible breaking.

LBS M range:
- rating from 16 to 30 A,
- motor controller only,
- 3 pole and possibility of adding an additional switched and/or unswitched pole,
- back plate or door mounted,
- direct or external handle (padlockable in ON position),
- double breaking per phase,
- fully visible breaking.

This document is not a contract. SOCOMEC reserves the right to modify features without prior notice in view of continued improvement. 2008 - 2009

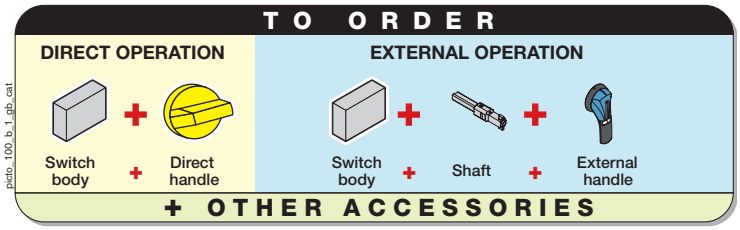

References

▶ *Base mounted LBS R UL*

como_061_a_4_cat

Rating (A)	No. of poles	Switch body only	Direct handle	Door interlocked external handle	Shaft extensions for external handle	Contact holder + 1st auxiliary contacts(2)(3)(4)	Additional auxiliary contacts(2)(3)(4)	Door mounting kit(5)
30	3 P	2101 **3U03**	Black 3 P 2109 **0U01** Black 4 P 2109 **0U03**	Black Selector (M) 4, 4X(1) 2109 **0U16** Black S1 type defeatable 1, 3R, 12(1) 141F **2111** Black S1 type defeatable 4, 4X(1) 141D **2111**	200 mm 7.9 in Selector (M) 2499 **1U20** 320 mm 12.6 in S1 type 1402 **0532**	3 P NO 2199 **0011** 4 P NO 2199 **0021**	3/4 P NC 2199 **0U10** 3/4 P NO 2199 **0U20**	2199 **5015**
	4 P	2101 **4U03**						
40	3 P	2101 **3U04**						
	4 P	2101 **4U04**						
60	3 P	2101 **3U06**	Black 3 P 2109 **0U02**			3 P NO 2199 **0031**		
	4 P	-						
80	3 P	2101 **3U08**						
	4 P	-						
100	3 P	2101 **3U10**						
	4 P	-						
125	3 P	2101 **3U11**						
	4 P	-						

(1) Nema type.
(2) For the use of an auxiliary contacts, use a shaft extension of at least 180 mm in length.
(3) For externally operated switch.
(4) Maximum 6 auxiliary contacts.
(5) No auxiliary contact capability.

This document is not a contract. SOCOMEC reserves the right to modify features without prior notice in view of continued improvement. 2008 - 2009

LBS UL
16 to 125 A
(North American market)

References

Base mounted LBS M UL

Rating (A)	No. of poles	Switch body only	Switched fourth pole module	Unswitched neutral module	Unswitched protective earth module	Direct handle	Door interlocked external front handle	Shaft extensions for external handle	Auxiliary contacts	Terminal shrouds[2]
16	3 P	2411 **3U00**	1 P 2410 **1U00**	1 P 2410 **5U05**	1 P 2410 **9U05**	Black 2419 **0U11**	Black Selector (M) 4, 4X[1] 2109 **0U16** Black S1 type defeatable 1, 3R, 12[1] 141F **2111** Black S1 type defeatable 4, 4X[1] 141D **2111**	200 mm 7.9 in Selector (M) 2499 **1U20** 320 mm 12.6 in S1 type 1402 **0532**	NC + NO 2419 **0U01**	1 P 2409 **4105** 3 P 2409 **4305**
20	3 P	2411 **3U01**	1 P 2410 **1U01**							
25	3 P	2411 **3U02**	1 P 2410 **1U02**							
30	3 P	2411 **3U03**	1 P 2410 **1U03**							

(1) Nema type.
(2) Top/bottom.

Door mounted LBS M UL

Rating (A)	No. of poles	Switch body only	Switched fourth pole module	Unswitched neutral module	Unswitched protective earth module	Door interlocked external front handle	Auxiliary contacts	Terminal shrouds[2]
16	3 P	2420 **3U00**	1 P 2420 **1U00**	1 P 2420 **5U05**	1 P 2420 **9U05**	Black Selector (M) 4, 4X[1] 2109 **0U16**	NO + NC 2429 **0U01**	1 P 2409 **4105** 3 P 2409 **4305**
20	3 P	2420 **3U01**	1 P 2420 **1U01**					
25	3 P	2420 **3U02**	1 P 2420 **1U02**					
30	3 P	2420 **3U03**	1 P 2420 **1U03**					

(1) Nema type.
(2) Top/bottom.

This document is not a contract. SOCOMEC reserves the right to modify features without prior notice in view of continued improvement. 2008 - 2009

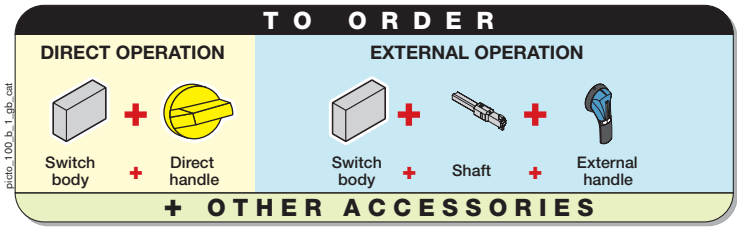

picto_100_b_1_gb_cat

Accessories

Direct handle

como_143_a_1_cat

Use

Padlocking in 0 position.

References

For base mounted LSB R UL

Rating (A)	No. of poles	Handle colour	References
30 … 40	3 P	Black	2109 **0U01**
60 … 125	3 P	Black	2109 **0U02**
30 … 40	4 P	Black	2109 **0U03**

For base mounted LSB M UL

Rating (A)	Handle colour	Reference
16 … 30	Black	2419 **0U11**

Door interlocked external front handle

como_067_a_2_cat

M type handle

acces_149_a_1_cat

S type handle

Use

Selector, and Pistol handles are padlockable in 0 position.

Pistol handles are defeatable in 1 position.

Nema type 1, 3R, 12: degree of protection against circulating dust, falling dirt and dripping non corrosive liquids.

Nema type 4, 4X: degree of protection against corrosion, wind blown dust and rain, splashing water, hose directed water.

For dimensions, see page A.272.

References

For base mounted interlocked handle LBS R UL and LBS M UL

Rating (A)	Handle colour	Handle type	Nema type	References
16 … 125	Black	Selector (M)	4, 4X	2109 **0U16**
16 … 125	Red/yellow	Selector (M)	4, 4X	2109 **0U15**
16 … 125	Black	S1 type(1)	1, 3R, 12	141F **2111**
16 … 125	Red/yellow	S1 type(1)	1, 3R, 12	141G **2111**
16 … 125	Black	S1 type(1)	4, 4X	141D **2111**
16 … 125	Red/yellow	S1 type(1)	4, 4X	141E **2111**

(1) Defeatable handle.

For door mounted handle LBS M UL

Rating (A)	Handle colour	Handle type	Nema type	References
16 … 30	Black	Selector (M)	4, 4X	2109 **0U16**
16 … 30	Red/yellow	Selector (M)	4, 4X	2109 **0U15**

Shaft extensions for external handle

acces_145_b_1_cat

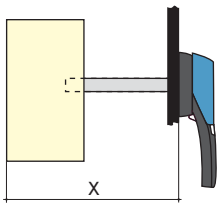

acces_202_a_1_cat

Use

For external operation according to the corresponding handle.

For enclosure minimum depth, see page A.273.

References

Rating (A)	Handle type	Shaft length (mm)	Shaft length (inches)	References
16 …125	Selector (M)	120	4.7	2499 **1U12**
16 … 125	Selector (M)	200	7.9	2499 **1U20**
16 … 125	Selector (M)	305	12.0	2499 **1U30**
16 … 125	S1 type(1)	200	7.9	1402 **0520**
16 … 125	S1 type(1)	320	12.6	1402 **0532**
16 … 125	S1 type(1)	400	15.7	1402 **0540**

(1) Defeatable handle.

This document is not a contract. SOCOMEC reserves the right to modify features without prior notice in view of continued improvement. 2008 - 2009

LBS UL
16 to 125 A
(North American market)

Functions
References
Accessories
Characteristics
Dimensions

Accessories

Switched fourth pole module for LBS M UL

Use
Transforms the 3 pole switch into 4 pole switch.

References

For base mounted

Rating (A)	References
16	2410 **1U00**
20	2410 **1U01**
25	2410 **1U02**
30	2410 **1U03**

For door mounted

Rating (A)	References
16	2420 **1U00**
20	2420 **1U01**
25	2420 **1U02**
30	2420 **1U03**

Unswitched neutral module for LBS M UL

Use
Transforms the 3 pole switch into 3 pole + unswitched neutral switch.

References

For base mounted

Rating (A)	Reference
16 … 30	2410 **5U05**

For door mounted

Rating (A)	Reference
16 … 30	2420 **5U05**

Unswitched protective earth module for LBS M UL

Use
Adds a protective earth module to the switch.

References

For base mounted

Rating (A)	Reference
16 … 30	2410 **9U05**

For door mounted

Rating (A)	Reference
16 … 30	2420 **9U05**

This document is not a contract. SOCOMEC reserves the right to modify features without prior notice in view of continued improvement. 2008 - 2009

Accessories

Auxiliary contacts

como_128_a_1_cat

Use

Pre break and indication of the 0 and 1 position.

LBS M UL from 1 to 2 NO + NC auxiliary contacts per switch.

LBS R UL with only external operation.

Max 6 NO or NC auxiliary contacts.

Referencess

For LBS R UL

Rating (A)	Position of AC	No. of poles	Contact type	References
30 … 40	1st	3 P	NO	2199 **0011**
30 … 40	1st	4 P	NO	2199 **0021**
60 … 125	1st	3 P	NO	2199 **0031**
30 … 125	from 2nd to 6th	3/4 P	NC	2199 **0U10**
30 … 125	from 2nd to 6th	3/4 P	NO	2199 **0U20**

For base mounted LBS M UL

Rating (A)	Contact type	References
16 … 30	NC + NO	2419 **0U01**

For door mounted LBS M UL

Rating (A)	Contact type	References
16 … 30	NC + NO	2429 **0U01**

Terminal shrouds

como_100_a_1_cat

Use

Top and bottom protection against direct contact with the terminals.

Top and bottom pair.

Referencess

For LBS M UL

Rating (A)	No. of poles	Position	Pack qty	References
16 … 30	1 P	top / bottom	2	2409 **4105**(1)
16 … 30	3 P	top / bottom	2	2409 **4305**(1)

(1) 1 pack of 2 pieces required to shroud both sides of switch.

This document is not a contract. SOCOMEC reserves the right to modify features without prior notice in view of continued improvement. 2008 - 2009

LBS UL
16 to 125 A
(North American market)

Functions
References
Accessories
Characteristics
Dimensions

UL and CSA characteristics for LBS R "Motor Controller suitable as motor disconnect"

Technical characteristics	30 A[1]	40 A[1]	60 A	80 A	100 A	125 A
Approvals	UL508 / CSA MD	UL508 / CSA MD	UL508 / CSA MD	UL508 / CSA MD	UL508 MD	UL508[2]
Short-circuit rating at 600 VAC (kA)	10	10	10	10	10	10
Branch circuit fuse type	RK5	RK5	H, K or RK5	H, K or RK5	H, K or RK5	H, K or RK5
Max fuse rating (A)	80	80	150	150	150	150
Maximum UL Horsepower ratings (3-ph)						
208 VAC	7.5	7.5	10	15	20	20
220-240 VAC	7.5	7.5	15	20	20	25
440-480 VAC	15	20	30	40	40	50
600 VAC	20	25	40	50	-	60
Maximum UL Horsepower ratings (1-ph)						
120 VAC	1.5	2	2	3	5	5
240 VAC	3	3	7,5	10	15	15
DC ratings - 2 pole in series						
125 VDC	30	40	60	80	80	80
Terminal lugs						
Wire type	Cu	Cu	Cu	Cu	Cu	Cu
Rigid connection section	#10 - #14	#10 - #14	#10 - #14	#10 - #14	#10 - #14	#10 - #14
Flexible connection section	#4 - #14	#4 - #14	#1 - #14	#1 - #14	#1 - #14	#1 - #14
Weight						
Weight (lb)	0.44	0.44	0.66	0.66	0.66	0.66

(1) Consult factory for "approvals of" 4 pole ratings.
(2) UL 508 Motor Controller only.

UL and cUL characteristics for LBS M "Motor Controller only"

Technical characteristics	16 A	20 A	25 A	30A
Approvals	UL508 / cUL	UL508 / cUL	UL508 / cUL	UL508 / cUL
Short-circuit rating at 600 VAC (kA)	5	5	5	5
Branch circuit fuse type	RK5	RK5	RK5	RK5
Max fuse rating (A)	30	30	30	30
Maximum UL Horsepower ratings (3-ph)				
208 VAC	3	5	7.5	7.5
220-240 VAC	5	5	7.5	7.5
440-480 VAC	10	10	15	15
600 VAC	10	15	20	20
Maximum UL Horsepower ratings (1-ph)				
120 VAC	1	1,5	2	2
240 VAC	2	3	3	5
DC ratings - 2 pole in series				
125 VDC	16	20	25	30
Terminal lugs				
Wire type	Cu	Cu	Cu	Cu
Rigid connection section	#10 - #14	#10 - #14	#10 - #14	#10 - #14
Flexible connection section	#6 - #14	#6 - #14	#6 - #14	#6 - #14
Weight				
Weight (lb)	0.32	0.32	0.32	0.32

This document is not a contract. SOCOMEC reserves the right to modify features without prior notice in view of continued improvement. 2008 - 2009

Dimensions

Base mounted LBS R UL

• 30 to 40 A - 3 pole

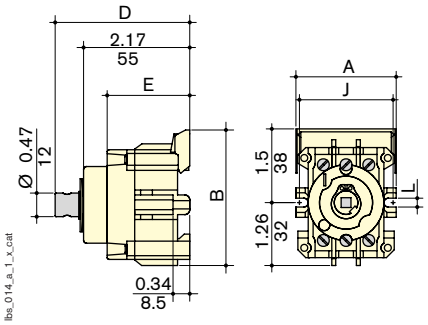

• 30 to 40 A - 4 pole

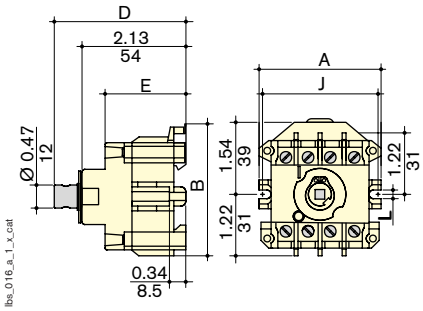

• 60 to 125 A - 3 pole

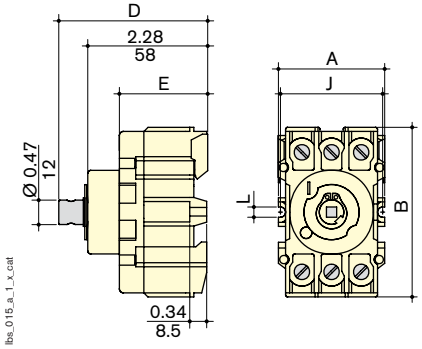

Rating (A)	No. of poles	A		B		D		E		J		L	
		In	mm	In	mm	In	mm	In	mm	In	mm	In	mm
30 ... 40	3	2.01	51	2.76	70	2.71	69	1.66	42	1.89	48	0.17	4.2
30 ... 40	4	2.42	61.5	2.76	70	2.71	69	1.66	42	2.38	60.5	0.17	4.2
60 ... 125	3	2.09	53	3.35	85	2.87	73	1.69	43	2.05	52	0.17	4.2

LBS R UL with auxiliary contacts

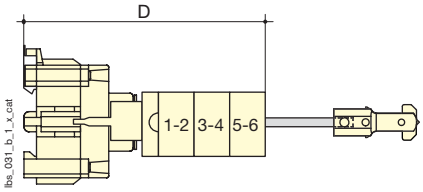

Rating (A)	No. of poles	D					
		1 - 2 AC		3 - 4 AC		5 - 6 AC	
		In	mm	In	mm	In	mm
30 … 40	3/4	3.63	92	4.53	115	5.44	138
60 … 125	3	3.78	96	4.69	119	5.60	142

Base mounted LBS M UL

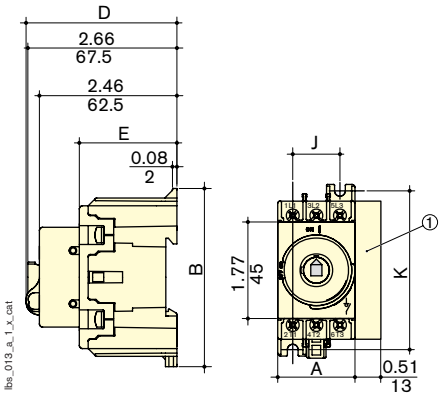

1. Fourth power pole.

Rating (A)	No. of poles	A		B		D		E		J		K	
		In	mm	In	mm	In	mm	In	mm	In	mm	In	mm
16 … 125	3	1.42	36	3.15	80	2.76	70	1.76	44.5	0.87	22	2.92	74

This document is not a contract. SOCOMEC reserves the right to modify features without prior notice in view of continued improvement. 2008 - 2009

LBS UL
16 to 125 A
(North American market)

Dimensions

Base mounted LBS M UL

- External front operation with selector handle

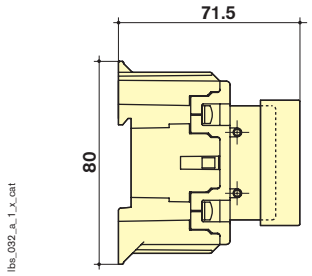

- External front operation with rotary handle

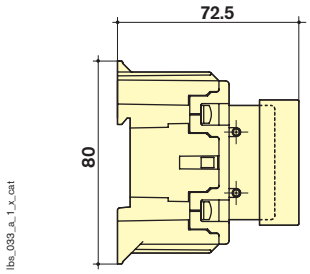

Door interlocked external front handle

- M type: selector handle

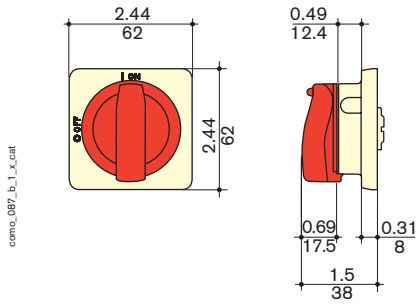

- S1 type: pistol handle

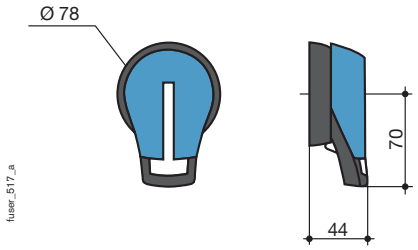

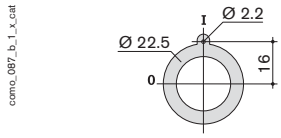

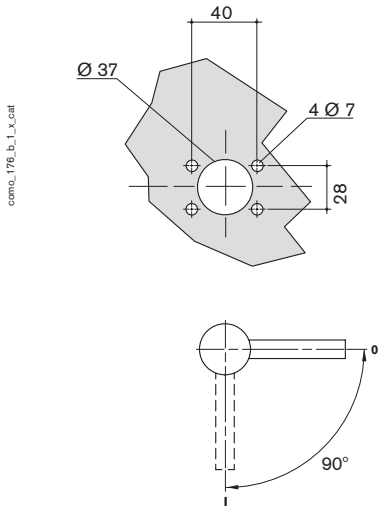

This document is not a contract. SOCOMEC reserves the right to modify features without prior notice in view of continued improvement. 2008 - 2009

Dimensions

Shaft extensions for external handle

• M type: selector handle

LBS R UL 30 to 40 A - LBS M UL 16 to 30 A

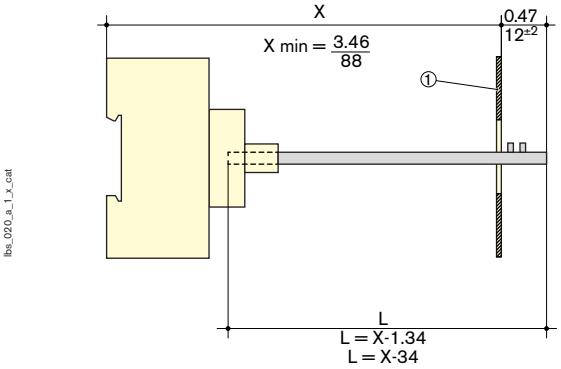

LBS R UL 60 to 125 A

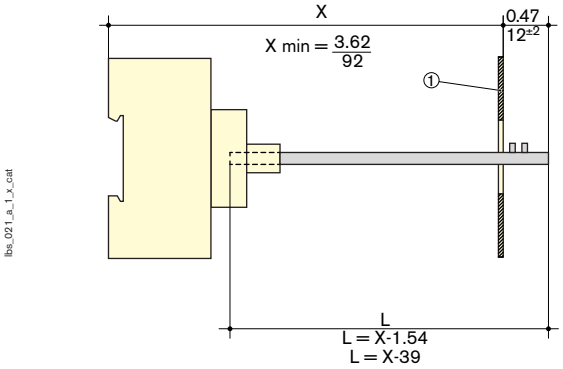

1. Door

• S type: pistol handle

LBS R UL 30 to 40 A - LBS M UL 16 to 30 A

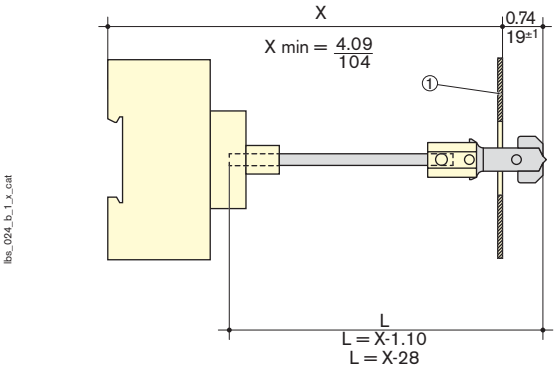

LBS R UL 60 to 125 A

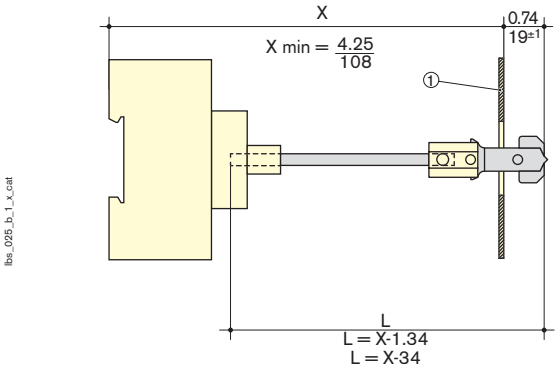

1. Door

This document is not a contract. SOCOMEC reserves the right to modify features
without prior notice in view of continued improvement. 2008 - 2009

SIRCO UL
30 to 1200 A
(North American market)

Functions
References
Accessories
Characteristics
Dimensions

ul_028_a

ul_008_a

Functions

SIRCO UL are manually operated multipolar load-break switches.
They break on and off under load and provide safety isolation for any low voltage circuit.

Conformity to standards

- UL 489 listed, Guide WJAZ, file E255272 for 30 A rating
- CSA 22.2 §5, Class 4652-06, file 112964
- UL 98 listed, Guide WHTY, file E201138 for 60 to 1200 A ratings
- CSA 22.2 §4, Class 4652-04, file 112964
- IEC 60947-3

General characteristics

- Fully visible breaking.
- High thermal and dynamic withstand.
- Arduous categories of applications.
- Good electrical and mechanical endurances.

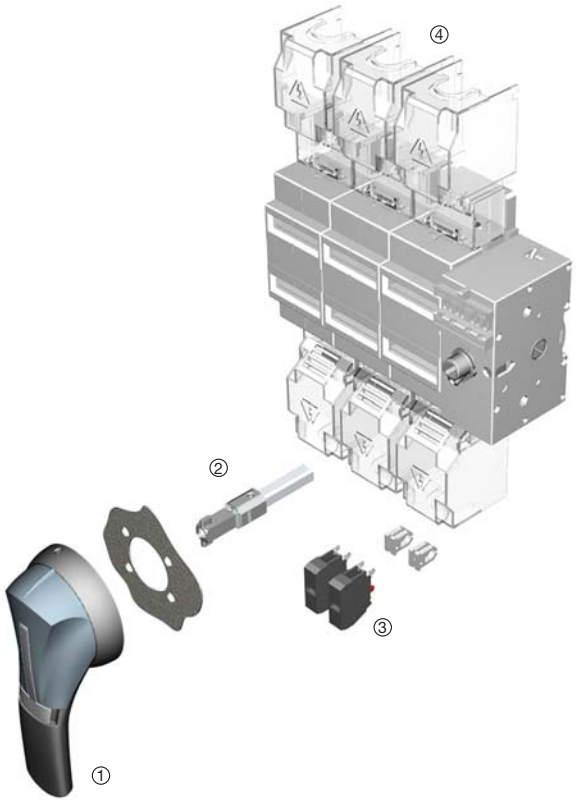

sider_104_b_1_x_cat

Overview (for further details, please see the installation instructions supplied with each device).

1. External front handle
2. Shaft extensions for external handle
3. Configurable U type ACs, for pre-break and signalling or TEST
4. Terminal shrouds

This document is not a contract. SOCOMEC reserves the right to modify features without prior notice in view of continued improvement. 2008 - 2009

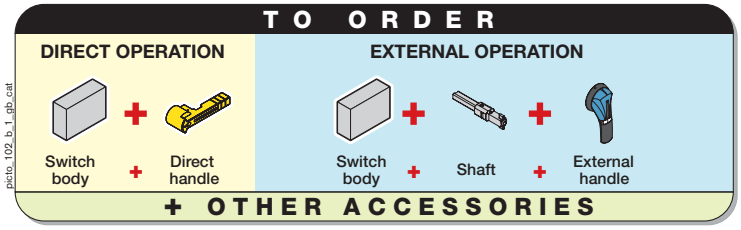

References

▶ *Front operation SIRCO V*

Rating (A)	No. of poles	Switch body only	Direct handle	Door interlocked external handle	Shaft extensions for external handle	NFPA 79 kit[1]	Auxiliary contacts	Terminal shrouds	Terminal lugs
V 30	3 P	2700 **3003**	Black 3729 **4012** Red 3729 **4013**	Black Selector (M) 4, 4X 2109 **0U16**[2] Black Pistol (S) defeatable 1, 3R, 12 141F **2111**[2]	320 mm 12.6 in Selector (M) 379M **0532** 320 mm 12.6 in Pistol (S) 1401 **0532**	3729 **4532**	1 AC U type NO 3999 **0701** 1 AC U type NC 3999 **0702**	3/4 pole integrated	3/4 pole integrated
	3 P + switched neutral	2700 **4003**							
V 60	3 P	2701 **3006**	3629 **7910**[5]	Black Pistol (S) defeatable 1, 3R, 12 142F **2111**[2] Black Pistol (S) defeatable 4, 4X 142D **2111**[2]	320 mm 12.6 in Pistol (S) 1400 **1032**	3729 **7541**	1 AC U type NO 3999 **0701** 1 AC U type NC 3999 **0702** 1 AC S type NC + NO 3999 **U041** 2 AC S type NC + NO 3999 **U042**		
	4 P	2701 **4006**							
V 100	3 P	2701 **3010**							
	4 P	2701 **4010**							
V 200	3 P	2701 **3020**				3729 **7542**		3798 **3020**[3]	3954 **6020**
	4 P	2701 **3020**						3798 **4020**[3]	3954 **8020**
V 400	3 P	2701 **3039**						2798 **3039**[4]	3954 **6060**
	4 P	2701 **4039**						2798 **4039**[4]	3954 **8060**

(1) Includes mechanism, shaft and internal handle. Please order external handle.
(2) Nema type.
(3) Top supplied as standard.
(4) As replacement only as top and bottom shrouds are included.
(5) Not UL.

This document is not a contract. SOCOMEC reserves the right to modify features without prior notice in view of continued improvement. 2008 - 2009

SIRCO UL
30 to 1200 A
(North American market)

References

Front operation SIRCO

Rating (A)	No. of poles	Switch body only	Direct handle	Door interlocked external handle	Shaft extensions for external handle	Auxiliary contact	Terminal screens	Terminal lugs
400	3 P	2700 **3040**	3799 **6012**	Black 4, 4X defeatable Pistol (S) 143D **7111**(1) Black 4, 4X defeatable Pistol (S) 143D **3111**(1)	200 mm 1401 **1520**	2699 **U144**(5)	3 P 2798 **3060**(2) 4 P 2798 **4060**(2)	3 P 3954 **6060**(3) 4 P 3954 **8060**(3)
	4 P	2700 **4040**						
600	3 P	2700 **3060**						
	4 P	2700 **4060**						
800	3 P	2700 **3080**					3 P 2798 **3120**(2) 4 P 2798 **4120**(2)	3 P 3954 **6120**(4) 4 P 3954 **8120**(4)
	4 P	2700 **4080**						
1000	3 P	2700 **3100**						
	4 P	2700 **4100**						
1200	3 P	2700 **3120**						
	4 P	2700 **4120**						

(1) Nema type.
(2) Top supplied as standard. be ordered at the same time as the AC contact holder.
(3) 6 terminals for 3 pole - 8 terminals for 4 pole.
(4) 12 terminals for 3 pole - 16 terminals for 4 pole.
(5) 4 auxiliary contacts as standard.

This document is not a contract. SOCOMEC reserves the right to modify features without prior notice in view of continued improvement. 2008 - 2009

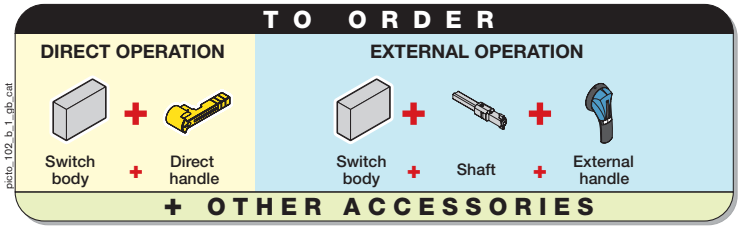

References

▶ *Side operation SIRCO V*

Rating (A)	No. of poles	Switch body only	Direct handle	"Flange" handle[1]	Cable for "Flange" handle[1]	Rod for "Flange" handle[1]	Auxiliary contacts	Terminal shrouds	Terminal lugs
V 60	3 P	2705 **3006**	Black 3729 **7901**	Standard handle 1, 3, 3R, 4, 12 defeatable 3729 **9002**[2] Chrome-plated handle 1, 3, 3R, 4, 4x, 12 defeatable 3729 **9003**[2]	Mechanism for "Flange" handle 3729 **9902** 900 mm 36 Inches 3729 **9992** 1500 mm 60 Inches 3729 **9993** 3000 mm 120 Inches 3729 **9994**	For enclosure depth of 6 Inches minimum 3729 **9940** For enclosure depth from 8 to 24 Inches 3729 **9500**	1 AC S type NC + NO 3999 **U041** 2 AC S type NC + NO 3999 **U041**	3/4 pole integrated	3/4 pole integrated
	4 P	2705 **4006**							
V 100	3 P	2705 **3010**							
	4 P	2705 **4010**							
V 200	3 P	2705 **3020**						3798 **3020**[3]	3954 **6020**[5]
	4 P	2705 **4020**						3798 **4020**[3]	3954 **8020**[5]
V 400	3 P	2705 **3039**						2798 **3039**[4]	3954 **6060**[5]
	4 P	2705 **4039**						2798 **4039**[4]	3954 **8060**[5]

(1) NFPA 79 compliant accessories, see page A.278.
(2) Nema type.
(3) Top supplied as standard.
(4) As replacement only as shrouds are included.
(5) 6 terminals for 3 poles - 8 terminals for 4 poles.

This document is not a contract. SOCOMEC reserves the right to modify features without prior notice in view of continued improvement. 2008 - 2009

SIRCO UL
30 to 1200 A
(North American market)

NFPA 79 compliant accessories

"Flange" handle for side operated SIRCO V

sirco_246_a_1_cat

Use

For side operated switches only provides heavy duty flange style operation.
Meets both UL508A and NFPA 79 requirement.
Please order cable or rod link between handle and switch.

References

Rating (A)	Handle type	Nema type	References
V 60 … V 400	standard handle	1, 3, 3R, 4, 12	3729 **9002**(1)
V 60 … V 400	chrome-plated handle	1, 3, 3R, 4, 4X, 12	3729 **9003**(1)

(1) Defeatable.

Cables for "Flange" handle for side operated SIRCO V

sirco_247_a_1_cat

ul_042_b_1

Use

Link between "Flange" handle and side operated switches, please order mechanism and "Flange" handle.

References

Rating (A)	Type	Reference
V 60 … V 400	mechanism for "Flange" handle	3729 **9902**

Cable length (inches)	Cable length (mm)	References
36	900	3729 **9992**
60	1500	3729 **9993**
120	3000	3729 **9994**

Rod for "Flange" handle for side operated SIRCO V

ul_043_a

Use

Link between "Flange" handle and side operated switches.
Mechanism included, cost effective solution.
Please order "Flange" handle.

References

For enclosure depth (inches)	For enclosure depth (mm)	References
6	150	3729 **9940**
8 ... 24	203 ... 613	3729 **9500**

NFPA 79 kit for front operated SIRCO V

ul_121_b

Use

For front operated switches only. Meets both UL508A and NFPA 79 requirement.
Kit includes mechanism, shaft and internal handle.
Please order external handle (see page A.279).

References

Rating (A)	References
V 30	3729 **4532**
V 60 ... V 100	3729 **7541**
V 200 ... V 400	3729 **7542**

This document is not a contract. SOCOMEC reserves the right to modify features without prior notice in view of continued improvement. 2008 - 2009

Accessories

Direct handle

acces_147_a_2_cat

Fig. 1

acces_261_a

Fig. 2

acces_148_a_2_cat

Fig. 3

acces_135_a_2_cat

Fig. 4

For dimensions, see page A.288.

References

Front operation

Rating (A)	Handle colour	Fig.	References
V 30	Black	1	3729 **4012**
V 30	Red	1	3729 **4013**
V 60 … V 400	Black	2	3629 **7910**(1)
400 … 1200	Black	4	3799 **6012**

(1) Not UL

Side operation

Rating (A)	Handle colour	Fig.	References
V 60 … V 400	Black	3	3729 **7901**

Door interlocked external handle

como_067_a_1_cat

M type handle

acces_149_a_1_cat

S1 type handle

acces_150_a_1_cat

S2 type handle

acces_151_a_1_cat

S3 type handle

Use

The door interlocked external handle include one lockable handle, one escutcheon and most be associated with a shaft extension.

For dimensions, see page A.289.

References

Front operation

Rating (A)	Handle type	Handle colour	Nema type	Defeatable(1)	References
V 30	M	Black	4, 4X	no	2109 **0016**
V 30	M	Red	4, 4X	no	2109 **0015**
V 30	S1	Black	1, 3R, 12	yes	141F **2111**
V 30	S1	Red	1, 3R, 12	yes	141G **2111**
V 30	S1	Black	4, 4X	yes	141D **2111**
V 30	S1	Red	4, 4X	yes	141E **2111**
V 60 ... V 400	S2	Black	1, 3R, 12	yes	142F **2111**
V 60 ... V 400	S2	Red	1, 3R, 12	yes	142G **2111**
V 60 ... V 400	S2	Black	4, 4X	yes	142D **2111**
V 60 ... V 400	S2	Red	4, 4X	yes	142E **2111**
400 … 1200	S3	Black	4, 4X	no	143D **7111**
400 … 1200	S3	Black	4, 4X	yes	143D **3111**
400 … 1200	S3	Red	4, 4X	no	143E **7111**
400 … 1200	S3	Red	4, 4X	yes	143E **3111**

(1) Allow the door to be opened when the switch is on 1 (ON) position.

This document is not a contract. SOCOMEC reserves the right to modify features without prior notice in view of continued improvement. 2008 - 2009

SIRCO UL
30 to 1200 A
(North American market)

Accesories

Shaft extensions for external front handle

acces_143_a_1_cat

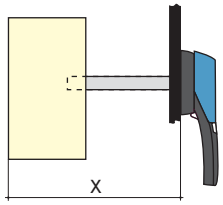

acces_202_a

Use

Standard length:
- 120 mm,
- 200 mm,
- 320 mm,
- 400 mm.

Other lengths: please consult us.

References

Rating (A)	Handle type	Shaft length (in/mm)	References
V 30	M	4.7 / 120	379M **0512**
V 30	M	7.9 / 200	379M **0520**
V 30	M	12.6 / 320	379M **0532**
V 30	M	15.7 / 400	379M **0540**
V 30	S1	7.9 / 200	1401 **0520**
V 30	S1	12.6 / 320	1401 **0532**
V 30	S1	15.7 / 400	1401 **0540**
V 60 … V 400	S2	7.9 / 200	1400 **1020**
V 60 … V 400	S2	12.6 / 320	1400 **1032**
V 60 … V 400	S2	15.7 / 400	1400 **1040**
400 … 1200	S3	7.9 / 200	1401 **1520**
400 … 1200	S3	15.7 / 400	1401 **1540**

X minimum dimension

Rating (A)	Handle type M		Handle type S	
	in	mm	in	mm
V 30	4.14	105	5.31	135
V 60 … V 100	-	-	5.31	135
V 200	-	-	7.32	186
V 400	-	-	11.30	287
400 … 1200	-	-	11.30	287

Snap-on U type pre-break auxiliary contacts for front operation

acces_045_a_1_cat

Use

For ratings from SIRCO V 30 to 100 A, up to 4 ACs max.

From SIRCO V 200 to 400 A, up to 8 ACs max.

Up to 1200 A, please consult us.

Connection to the control circuit

By terminal with a section of 2 x 2,5 mm² max.

References

NO auxiliary contact

Rating (A)	No. of AC	Reference
V 30 … V 400	1	3999 **0701**

NC auxiliary contact

Rating (A)	No. of AC	Reference
V 30 … V 400	1	3999 **0702**

NO/NC auxiliary contact

Rating (A)	Reference
400 … 1200	2699 **U144** (1)

(1) 4 auxiliary contacts included a standard.

S type auxiliary contacts for SIRCO V only

acces_051_a_3_cat

Use

Position 0 and I signalling by 1 to 4 auxiliary contacts NO + NC.

Installation on the side of the switch with a maximum of two blocks.

High electrical characteristics.

Connection

By cage with a section of 10 mm².

References

NC + NO auxiliary contacts

Rating (A)	No. of AC	References
V 60 … V 400	1	3999 **U041**
V 60 … V 400	2	3999 **U042**

This document is not a contract. SOCOMEC reserves the right to modify features without prior notice in view of continued improvement. 2008 - 2009

Accessories

Terminal shrouds or terminal screens

sirco_099_a_1_cat

fusom_059_a_1_cat

Use

Top and bottom protection against direct contacts with terminals or connection parts.

References

Rating (A)	No. of poles	Type	References
V 30 … V 100	3/4 P		integrated
V 200	3 P	terminal shrouds	3798 **3020**(1)
V 200	4 P	terminal shrouds	3798 **4020**(1)
V 400	3 P	terminal shrouds	2798 **3039**(2)
V 400	4 P	terminal shrouds	2798 **4039**(2)
400 … 600	3 P	terminal screens	2798 **3060**(1)
400 … 600	4 P	terminal screens	2798 **4060**(1)
800 … 1200	3 P	terminal screens	2798 **3120**(1)
800 … 1200	4 P	terminal screens	2798 **4120**(1)

(1) Top supplied as standard.
(2) Top and bottom supplied as standard, for replacement only.

Top and bottom terminal lugs

ul_032_a

Use

Connection of copper cables on to the terminals
(no spade lugs).

For dimensions, see page A.289.

References

Max. rating (A)	No. of poles	No. cable per lugs	Cable type	References
V 30 … V 100	3/4 P	1	Cu	integrated
V 200	3 P	1	Cu	3954 **6020**(1)
V 200	4 P	1	Cu	3954 **8020**(1)
V 400	3 P	2	Cu	3954 **6060**(1)
V 400	4 P	2	Cu	3954 **8060**(1)
400 … 600	3 P	2	Cu	3954 **6060**(1)
400 … 600	4 P	2	Cu	3954 **8060**(1)
800 … 1200	3 P	2	Cu	3954 **6120**(2)
800 … 1200	4 P	2	Cu	3954 **8120**(2)

(1) 6 lugs for 3 pole - 8 lugs pole.
(2) 12 lugs for 3 pole - 16 lugs for 4 pole.

This document is not a contract. SOCOMEC reserves the right to modify features without prior notice in view of continued improvement. 2008 - 2009

SIRCO UL
30 to 1200 A
(North American market)

UL and CSA characteristics for SIRCO V

Technical characteristics	V 30 A	V 60 A	V 100 A	V 200 A	V 400 A
Operating voltage	600	600	600	600	600
Short-circuit rating at 600 VAC (kA)	65	200	200	200	200
Fuse type	J or CC	J	J	J	J
Max. fuse rating (A)	30	60	100	200	400
Max. horsepower rating / Max. motor FLA current 3 ph					
220-240 VAC	7.5 / 22	15 / 42	30 / 80	60 / 154	125 / 312
440-480 VAC	15 / 21	30 / 40	60 / 77	125 / 156	250 / 302
600 VAC	20 / 22	50 / 52	75 / 77	150 / 144	350 / 336
125 VDC	3 / 25(1)	3 / 25(1)	7.5 / 58(1)	15 / 112(1)	20 / 148(1)
250 VDC	5 / 20(1)	10 / 38(2)	20 / 72(2)	40 / 140(2)	50 / 173(2)
Mechanical characteristics					
Endurance (number of operating cycles)	10 000	10 000	10 000	8 000	6 000
Terminal lugs					
Type	standard	standard	standard	option	option
Min. conn. section / AWG(3)	#14	# 10	#10	#6	2 x 2
Max. conn. section / AWG(3)	#10	# 3	#3	3 / 0	2 x 600 kcmil

(1) 2 pole in series.
(2) 3 pole in series.
(3) AWG: cross section of the American cable.

IEC 60947-1 and 60947-3 characteristics for SIRCO V

Technical characteristics		32 A	63 A	100 A	200 A	400 A
Rated insulation voltage U_i (V)		800	750	750	750	750
Rated impulse withstand voltage U_{imp} (kV)		8	8	8	8	8
Rated operation current I_e (A)						
Rated voltage	Load duty category	A(1)	A(1)	A(1)	A(1)	A(1)
400 VAC	AC-22 A	32	63	100	200	400
	AC-23 A	32	63	100	200	400
690 VAC	AC-22 A	32	63	100	200	400
	AC-23 A	32	63	100	200	315
Operational power in AC-23 A (kW)(1)(2)						
At 400 VAC without pre-break AC		15	30	51	100	220
At 500 VAC without pre-break AC		18.5	40	63	140	220
At 690 VAC without pre-break AC		25	55	90	185	295
Conditional short-circuit current(3)						
Rated peak withstand current (kA peak)		5.5	17.6	17.6	32	40
Connection						
Minimum Cu cable section (mm²)		6	10	25	50	185

(1) Category with index A = frequent operation.
(2) The power value is given for information only, the current values vary from one manufacturer to another.
(3) For a rated operating voltage U_e = 400 VAC.

This document is not a contract. SOCOMEC reserves the right to modify features without prior notice in view of continued improvement. 2008 - 2009

UL and CSA characteristics for SIRCO

Technical characteristics	400 A	600 A	800 A	1000 A	1200 A
Operating voltage	600	600	600	600	600
Short-circuit rating at 600 VAC (kA)	200	200	100	100	100
Fuse type	J	J	L	L	L
Max. fuse rating (A)	400	600	800	1000	1200
Max. horsepower rating / Max. motor FLA current 3 ph					
220-240 VAC	125 / 312	200 / 480	200 / 480	200 / 480	200 / 480
440-480 VAC	250 / 302	400 / 477	500 / 590	500 / 590	500 / 590
600 VAC	350 / 336	350 / 336	500 / 472	500 / 472	500 / 472
125 VDC	20 / 148(1)	20 / 148(1)	-	-	-
250 VDC	50 / 173(2)	50 / 173(2)	-	-	-
Mechanical characteristics					
Endurance (number of operating cycles)	6 000	6 000	3 500	3 500	3 500
Terminal lugs					
Type	option	option	option	option	option
Min. conn. section / AWG(3)	2 x 2	2 x 2	4 x 2	4 x 2	4 x 2
Max. conn. section / AWG(3)	2 x 600 kcmil	2 x 600 kcmil	4 x 600 kcmil	4 x 600 kcmil	4 x 600 kcmil

(1) 2 pole in series.
(2) 3 pole in series.
(3) AWG: cross section of the American cable.

IEC 60947-1 and 60947-3 characteristics for SIRCO

Technical characteristics		400 A	600 A	800 A	1000 A	1250 A
Rated insulation voltage U_i (V)		1000	1000	1000	1000	1000
Rated impulse withstand voltage U_{imp} (kV)		12	12	12	12	12
Rated operation current I_e (A)						
Rated voltage	Load duty category	A(1)	A(1)	A(1)	A(1)	A(1)
400 VAC	AC-22 A	400	630	800	1000	1200
	AC-23 A	400	630	800	1000	1000
690 VAC	AC-22 A	400	500	630	630	630
	AC-23 A	200	200	400	400	400
Operational power in AC-23 A (kW)(1)(2)						
At 400 VAC without pre-break AC		220	355	450	560	560
At 500 VAC without pre-break AC		280	450	560	560	560
At 690 VAC without pre-break AC		185	185	400	400	400
Conditional short-circuit current(3)						
Rated peak withstand current (kA peak)		48	48	75	75	75
Connection						
Minimum Cu cable section (mm²)		185	2 x 150	2 x 185	2 x 240	-
Minimum Cu busbar section (mm²)		-	2 x 30 x 5	2 x 40 x 5	2 x 50 x 5	2 x 60 x 5

(1) Category with index A = frequent operation.
(2) The power value is given for information only, the current values vary from one manufacturer to another.
(3) For a rated operating voltage U_e = 400 VAC.

This document is not a contract. SOCOMEC reserves the right to modify features without prior notice in view of continued improvement. 2008 - 2009

SIRCO UL
30 to 1200 A
(North American market)

Dimensions

Front operation

• **SIRCO V UL 30 A**

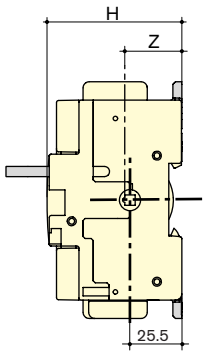

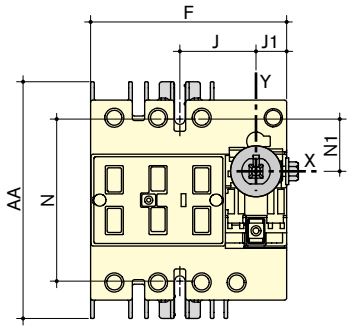

sirco_264_a_1_x_cat

Switch body								Switch mounting				Connection terminals			
F		H		J		J1		N		N1		AA		Z	
in	mm	in	mm	in	mm	in	mm	in	mm	in	mm	in	mm	in	mm
3.78	96	2.59	66	1.47	37.5	0.59	15	3.13	79.5	1	25.5	4.56	116	1.12	28.5

• **SIRCO V UL 60 and 100 A**

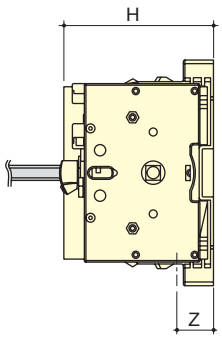

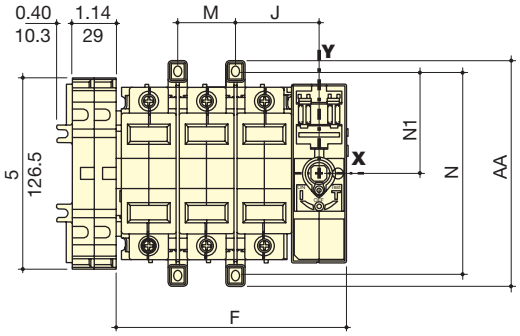

ul_001_a_1_cat

Switch body										Switch mounting				Connection terminals			
F 3p.		F 4p.		H		J		M		N		N1		AA		Z	
in	mm	in	mm	in	mm	in	mm	in	mm	in	mm	in	mm	in	mm	in	mm
5.98	152	7.48	190	3.89	99	2.12	54	1.5	38	5.25	133.5	2.63	66.5	5.87	149	0.95	24.5

This document is not a contract. SOCOMEC reserves the right to modify features without prior notice in view of continued improvement. 2008 - 2009

Dimensions

▶ *Front operation*

• SIRCO V UL 200 A

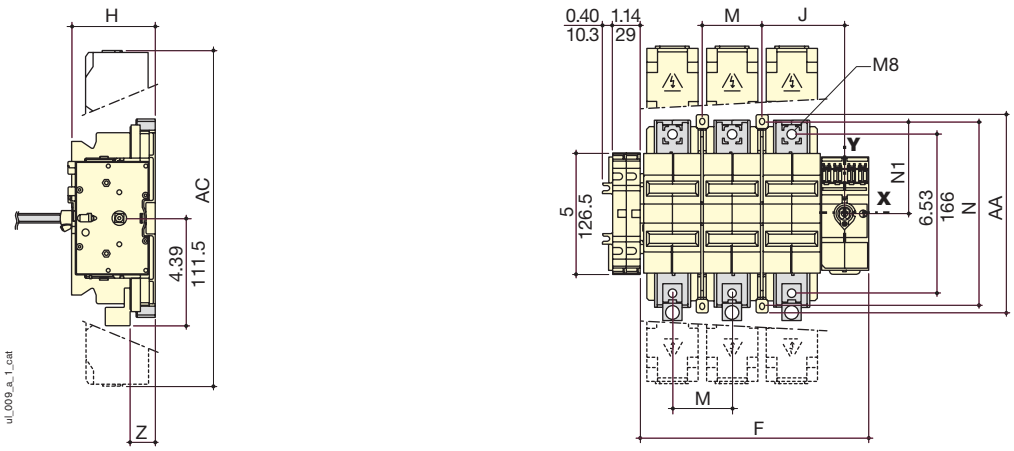

Terminal shrouds				Switch body								Switch mounting				Connection terminals			
AC		F 3p.		F 4p.		H		J		M		N		N1		AA		Z	
in	mm	in	mm	in	mm	in	mm	in	mm	in	mm	in	mm	in	mm	in	mm	in	mm
13.74	349	9.37	238	11.81	300	3.42	87	3.38	86	2.44	62	7.5	190.5	3.74	95	8.13	206.5	0.95	24.5

• SIRCO V UL 400 A

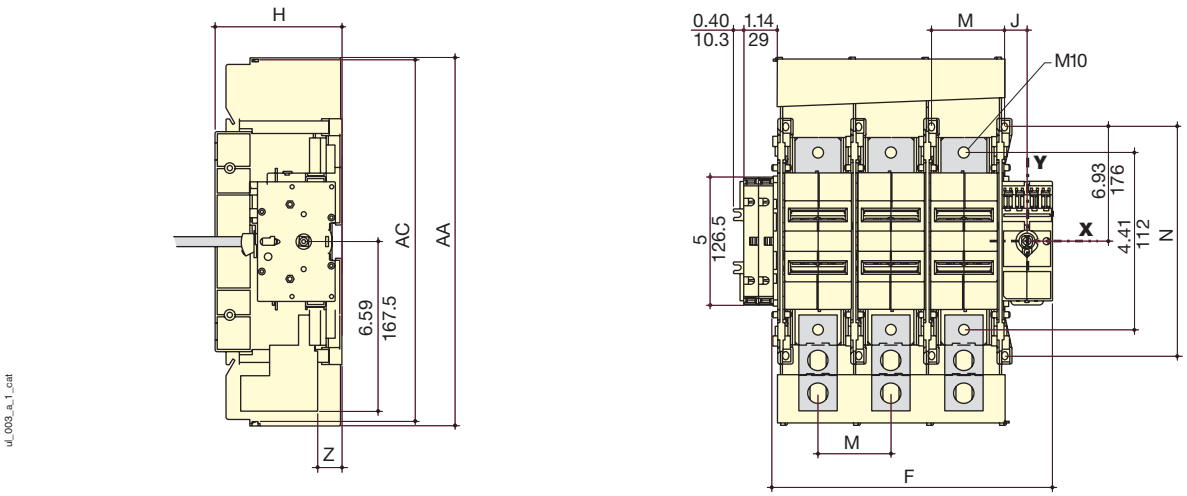

Terminal shrouds				Switch body								Switch mounting				Connection terminals			
AC		F 3p.		F 4p.		H		J		M		N		AA		Z			
in	mm	in	mm	in	mm	in	mm	in	mm	in	mm	in	mm	in	mm	in	mm	in	mm
14.08	358	10.8	276	13.7	348	4.92	125	0.88	22.5	2.84	72	8.83	224	14.31	363.5	1.06	27		

This document is not a contract. SOCOMEC reserves the right to modify features without prior notice in view of continued improvement. 2008 - 2009

SIRCO UL
30 to 1200 A
(North American market)

Dimensions

Front operation

• **SIRCO UL 400 to 600 A**

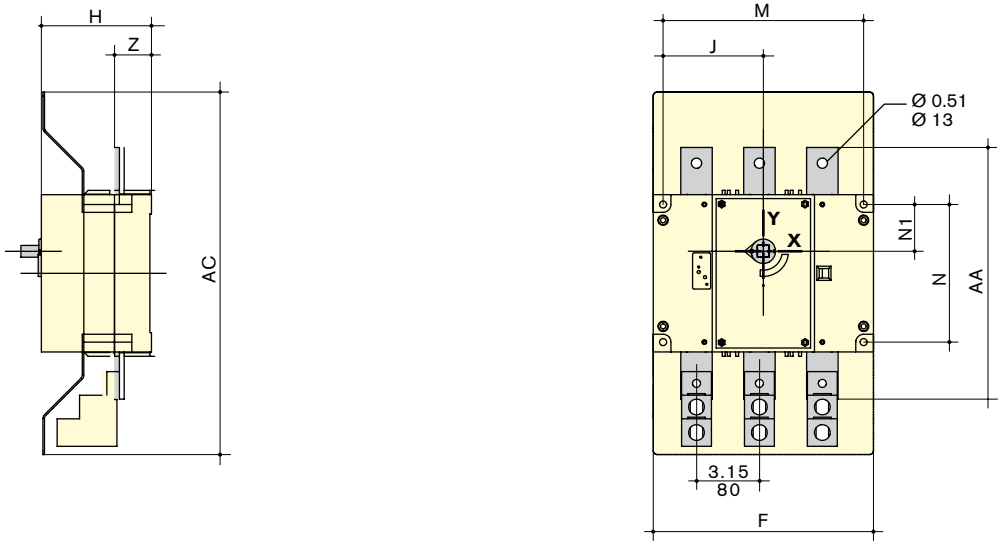

sirco_107_d_1_x_cat

Terminal shrouds						Switch body								Switch mounting						Connection terminals			
AC		F 3p.		F 4p.		H		J 3p.		J 4p.		M 3p.		M 4p.		N		N1		AA		Z	
in	mm	in	mm	in	mm	in	mm	in	mm	in	mm	in	mm	in	mm	in	mm	in	mm	in	mm	in	mm
18.12	460	11	280	14.17	360	5.5	140	5	127.5	6.59	167.5	10.03	255	13.19	335	6.88	175	2.34	59.5	12.6	320	1.85	47

• **SIRCO UL 800 to 1 200 A**

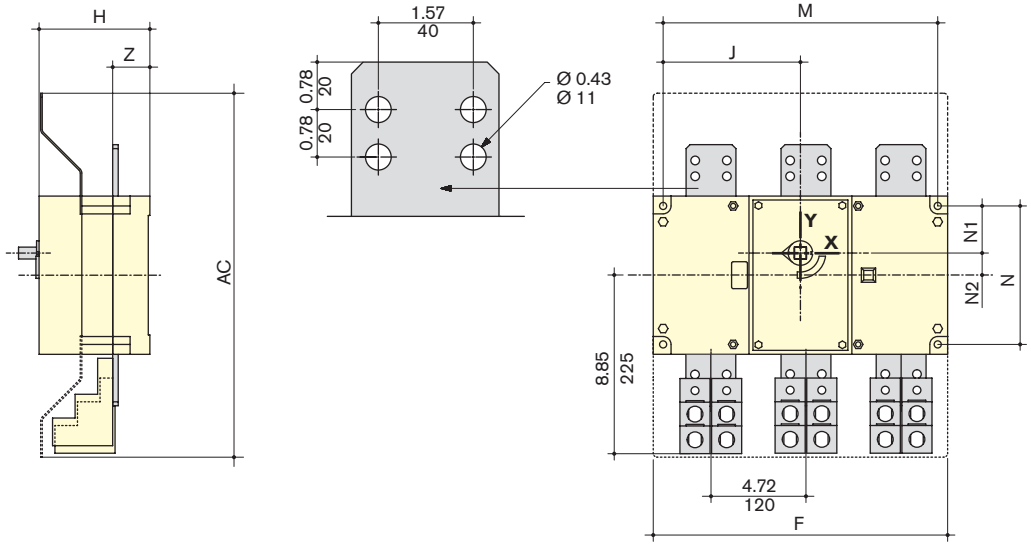

sirco_228_d_1_x_cat

Terminal shrouds						Switch body								Switch mounting						Connection terminals			
AC		F 3p.		F 4p.		H		J 3p.		J 4p.		M 3p.		M 4p.		N		N1		N2		Z	
in	mm	in	mm	in	mm	in	mm	in	mm	in	mm	in	mm	in	mm	in	mm	in	mm	in	mm	in	mm
18.12	460	14.64	372	19.37	492	5.5	140	6.83	173.5	9.19	233.5	13.66	347	18.38	467	6.88	175	2.34	59.5	1.10	28	1.85	47

This document is not a contract. SOCOMEC reserves the right to modify features without prior notice in view of continued improvement. 2008 - 2009

Dimensions

Side operation

• SIRCO V UL 60 and 100 A

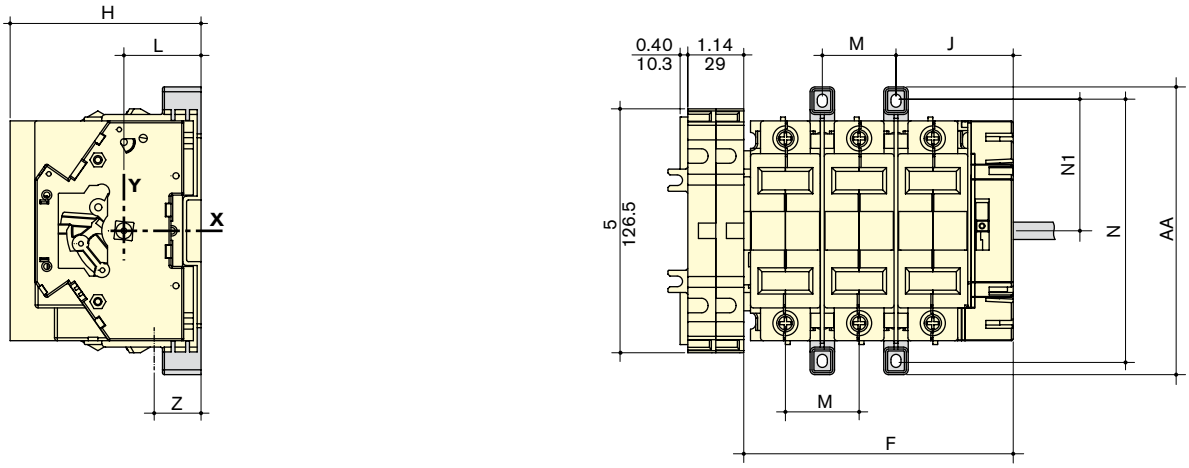

sirco_229_c_1_x_cat

Rating (A)	Switch body F 3p. in	F 3p. mm	F 4p. in	F 4p. mm	H in	H mm	J in	J mm	L in	L mm	Switch mounting M in	M mm	N in	N mm	N1 in	N1 mm	Connection terminals AA in	AA mm	Z in	Z mm
60	5.45	138.5	6.95	176.5	3.89	99	2.32	59	1.57	40	1.49	38	5.25	133.5	2.62	66.5	5.86	149	0.96	24.5
100	7.09	180	9.13	232	3.89	99	2.32	59	1.47	37.5	1.49	38	5.25	133.5	2.62	66.5	5.86	149	0.96	24.5

• SIRCO V UL 200 A

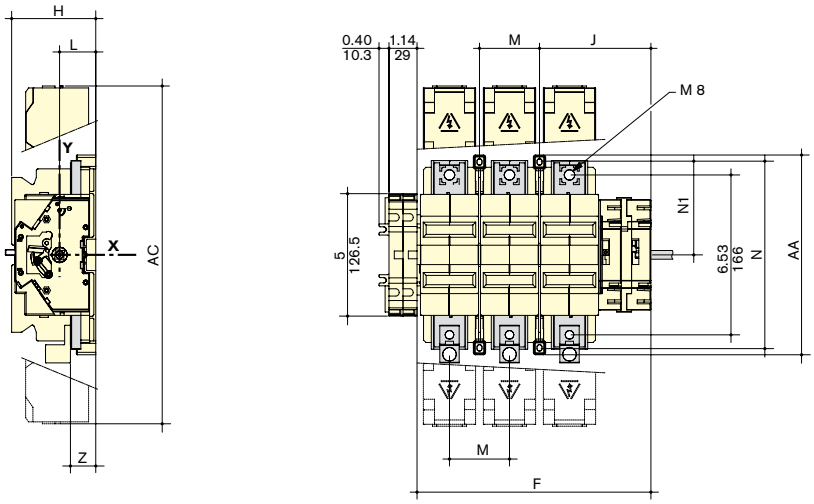

sirco_230_b_1_x_cat

Terminal shrouds AC in	AC mm	Switch body F 3p. in	F 3p. mm	F 4p. in	F 4p. mm	H in	H mm	J in	J mm	L in	L mm	Switch mounting M in	M mm	N in	N mm	N1 in	N1 mm	Connection terminals AA in	AA mm	Z in	Z mm
13.74	349	9.47	240.5	11.9	302.5	3.42	87	4.47	113.5	1.47	37.5	2.44	62	7.5	190.5	3.74	95	8.13	206.5	0.96	24.5

This document is not a contract. SOCOMEC reserves the right to modify features without prior notice in view of continued improvement. 2008 - 2009

SIRCO UL
30 to 1200 A
(North American market)

Dimensions

Side operation

• **SIRCO V UL 400 A**

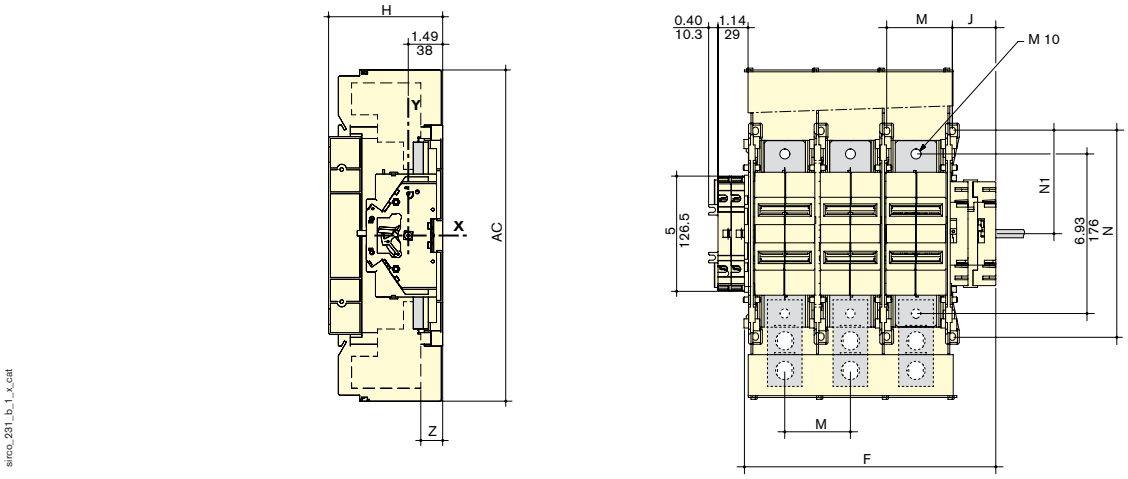

Terminal shrouds				Switch body								Switch mounting				Connection terminals			
AC		F 3p.		F 4p.		H		J		M		N		N1		AA		Z	
in	mm	in	mm	in	mm	in	mm	in	mm	in	mm	in	mm	in	mm	in	mm	in	mm
14.08	358	10.9	277	13.74	349	4.92	125	1.89	48	2.84	72	8.82	224	4.41	112	14.31	363.5	1.06	27

Direct handle

Front operation

SIRCO V 30 A

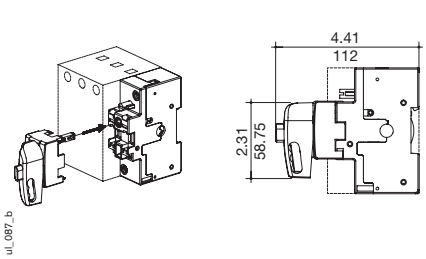

SIRCO 400 to 1200 A

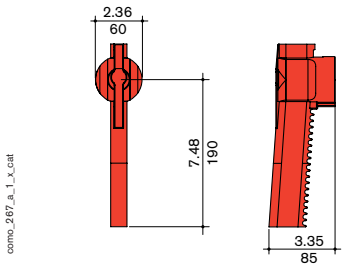

Side operation

SIRCO V 60 to 400 A

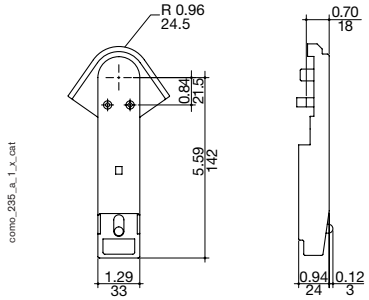

"Flange" style handle

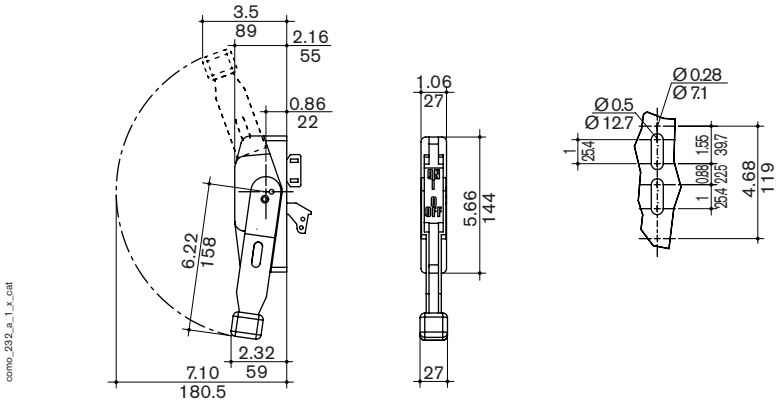

This document is not a contract. SOCOMEC reserves the right to modify features without prior notice in view of continued improvement. 2008 - 2009

Dimensions

Door interlocked external handle

S1 type handle

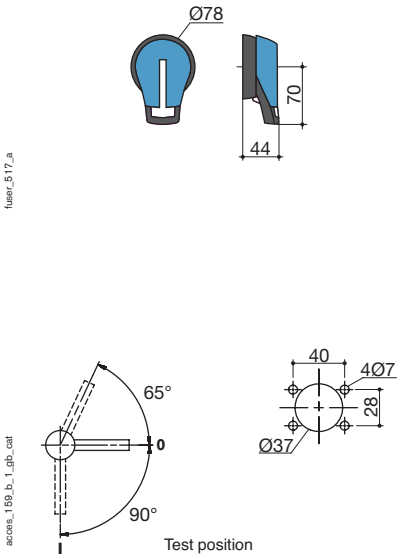

S2 type handle

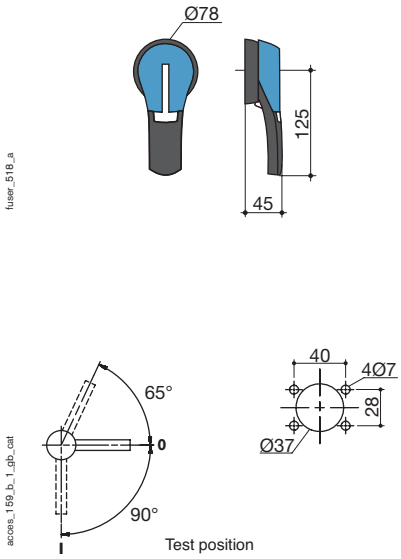

S3 type handle

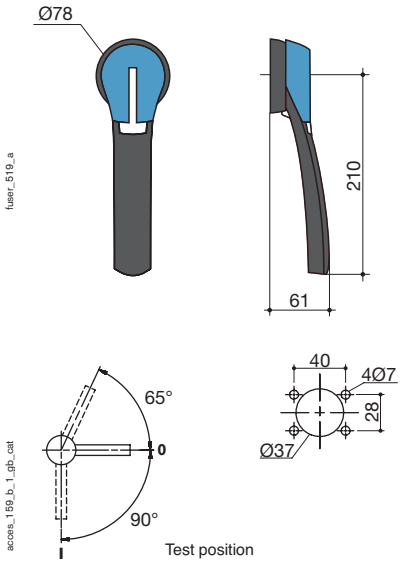

Top and bottom terminal lugs

SIRCO V 200 A (6 or 8 lugs)

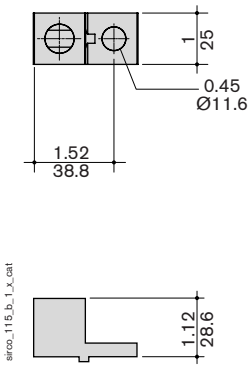

1 x 3/0 max

SIRCO V 400 and SIRCO 400 and 600 A (6 or 8 lugs)
SIRCO 800, 1000 and1 200 A (12 or 16 lugs)

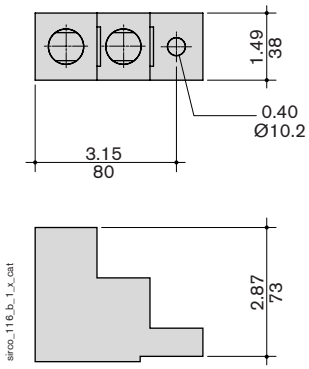

2 x 600 kcmil max

This document is not a contract. SOCOMEC reserves the right to modify features
without prior notice in view of continued improvement. 2008 - 2009

FUSERBLOC UL
30 to 800 A
(North American market)

Functions
References
Accessories
Characteristics
Dimensions

ul_002_a

ul_007_a

ul_004_a

Functions

FUSERBLOC UL are manual operated multipolar fusible disconnect switches.
The switches employ double break contacts per pole that ensure complete isolation of the fuse when the switch is in OFF position.
Associated with fuses they ensure the protection of low voltage electrical installation against short circuit and overload.

Conformity to standards

- UL 98, Guide WHTY, file E201138 for 30 to 800 A ratings
- UL 489, Guide WJAZ, file E255272 for CD 30 A/CC and CD 30 A/J ratings
- CSA 22.2 §4, Class 4652-04, file 112964 for 30 to 800 A ratings
- CSA 22.2 §5, Class 4652-06, file 112964 for CD 30 A/CC and CD 30 A/J ratings
- IEC 60947-1
- IEC 60947-3
- CE mark
- NFPA 79 (2002 Edition)

General characteristics

- Make and break power circuit applications on load.
- Double break contacts.
- Up to 200 kA Short Circuit rating with class CC, J or L fuses.
- Touch safe covers / line shrouding standard (IP2).
- Compact Footprints.
- The optional TEST position function (up to 400 A) enables testing of the control circuit auxiliaries without switching the main contacts; This function provides a simple alternative to a separately wired push button.
- Defeatable pistol handles automatically re-latch when the panel door is closed.
- Front or side operation.
- Flange operation.
- Internal handle with interlocking feature.
- NFPA 79 compliant kits.

Special products

- 2 pole, 6 pole, 8 pole... switches.
- Rear connection.
- Side connection.
- Central operation.

This document is not a contract. SOCOMEC reserves the right to modify features without prior notice in view of continued improvement. 2008 - 2009

Illustrations

FUSERBLOC UL CD 30 A/CC and CD 30 A/J - Direct and external operation

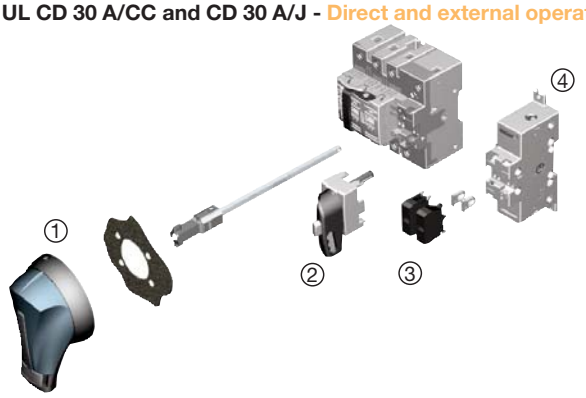

ul_010_a_1_x_cat

Functional diagram (for further details see the installation instructions supplied with every device).

1. External front handle.
2. Direct front handle.
3. Additional U type ACs block needed if ACs required, for pre-break and signalling or TEST (2x2 for CD 30 A/CC - 2x1 for CD 30 A/J).
4. Additional U type AC block holder for 2x2 ACs max.

FUSERBLOC UL 60, 100, 200 and 400 A/J - Direct operation

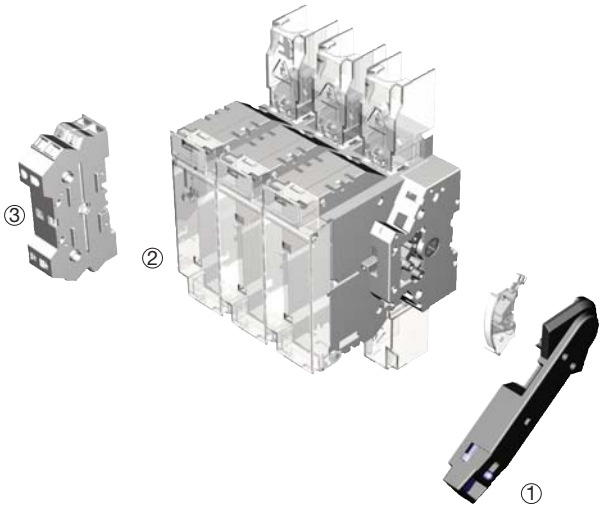

ul_005_a_1_x_cat

1. Direct side handle.
2. Fuse screen cover.
3. S type block (2 max).

FUSERBLOC UL 600 A/J and 800 A/L - Direct operation

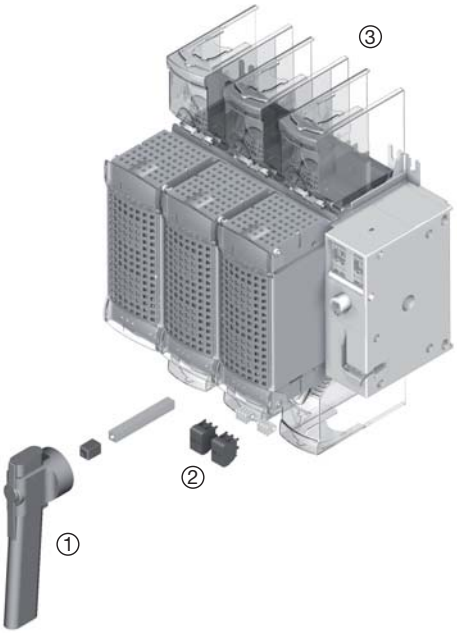

ul_006_a_1_cat

1. Direct front handle.
2. 2x4 configurable U type ACs, for pre-break and signalling or TEST.
3. Terminal shrouds.

This document is not a contract. SOCOMEC reserves the right to modify features without prior notice in view of continued improvement. 2008 - 2009

FUSERBLOC UL
30 to 800 A
(North American market)

Illustrations

FUSERBLOC UL 60, 100, 200 and 400 A/J - External front operation

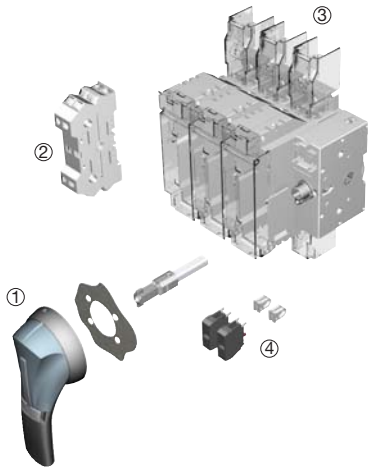

ul_011_a_1_x_cat

1. External front handle.
2. S type block (2 max).
3. Terminal shrouds.
4. Configurable U type ACs, for pre-break and signalling or TEST (2x2 for 60 and 100 A/J - 2x4 for 200 and 400 A/J).

FUSERBLOC UL 600 A/J and 800 A/L - External front operation

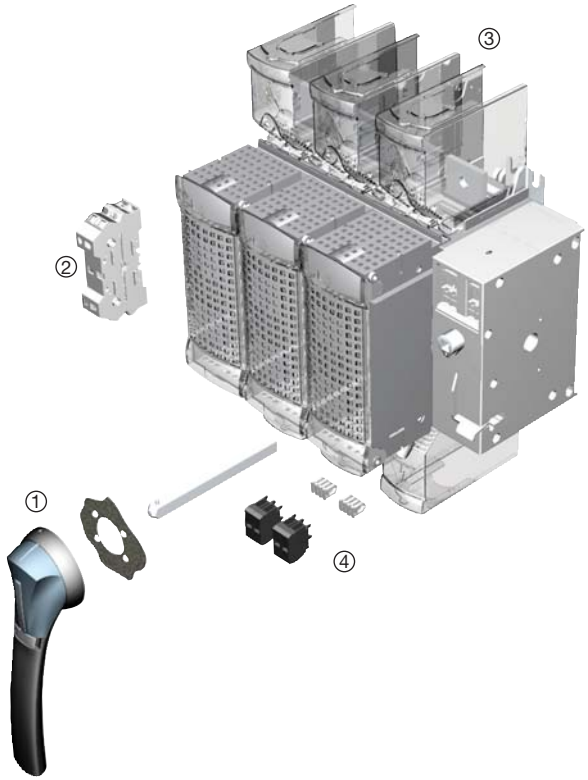

ul_012_a_1_x_cat

1. External front handle.
2. S type block (2 max).
3. Terminal shrouds.
4. 2x4 configurable U type ACs, for pre-break and signalling or TEST.

This document is not a contract. SOCOMEC reserves the right to modify features without prior notice in view of continued improvement. 2008 - 2009

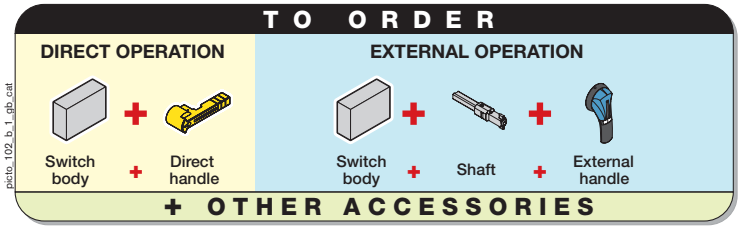

References

Front operation

Rating (A)	No. of poles	Switch body only	Direct handle	Door interlocked external handle	Shaft extensions for external handle	NFPA 79 kit[1]	U type contact holder	U type auxiliary contacts	S type auxiliary contacts	Terminal shrouds
CD 30 A CC	3 P	3710 **3003**	Black 3729 **4012**[5]	Black 4, 4X I - 0 Selector (M) 2109 **0U16**[2]	200 mm 7.9 in Selector (M) 379M **0520**	3729 **4532**	3/4 pole 3999 **0710**[3]	1 AC NC 3999 **0701**	-	standard
	3 P + switched neutral	3710 **4003**								
	3 P + solid neutral	3710 **5003**		Black 1, 3R, 12 I - 0 Pistol (S) defeatable 141F **2111**[2]	320 mm 12.6 in Pistol (S) 1401 **0532**					
CD 30 A J	3 P	3710 **3004**	Black 3729 **4014**[5]				3/4 pole 3999 **0710**[4]			
	3 P + switched neutral	3710 **4004**		Black 4, 4X I - 0 Pistol (S) defeatable 141D **2111**[2]						
	3 P + solid neutral	3710 **5004**								
30 A CC	3 P	3860 **3003**	3629 **7910**[6]	Black 1, 3R, 12 I - 0 Pistol (S) defeatable 142F **2111**[2]	200 mm 7.9 in Pistol (S) 1400 **1020**	3729 **7541**	-	1 AC NO 3999 **0702**	1 AC NO+NC 3999 **U041**	
	4 P	3860 **6003**								
30 A J	3 P	3860 **3005**		Black 4, 4X I - 0 Pistol (S) defeatable 142D **2111**[2]	320 mm 12.6 in Pistol (S) 1400 **1032**					
	4 P	3860 **6005**							2 AC NO+NC 3999 **U042**	
60 A J	3 P	3860 **3006**		Black 4, 4X I - 0 - Test Pistol (S) defeatable 142D **2115**[2]						
	4 P	3860 **6006**								

(1) Includes mechanism, shaft and internal handle. Please order external handle.
(2) Nema type.
(3) 30 A CC CD FUSERBLOC, from 5 to 8 AC, 4 AC can be fitted on the switch body (1 holder max).
(4) 30 A J CD FUSERBLOC, from 3 to 6 AC, 2 AC can be fitted on the switch body (1 holder max).
(5) If AC required, please order U type contact holder with numbers of ACs needed.
(6) Not UL.

This document is not a contract. SOCOMEC reserves the right to modify features without prior notice in view of continued improvement. 2008 - 2009

FUSERBLOC UL
30 to 800 A
(North American market)

Functions
References
Accessories
Characteristics
Dimensions

References

Front operation

Rating (A)	No. of poles	Switch body only	Direct handle	Door interlocked external handle	Shaft extensions for external handle	NFPA 79 kit[1]	U type auxiliary contacts	S type auxiliary contacts	Terminal shrouds
100 A J	3 P	3860 **3010**	3629 **7910**[4]	Black 1, 3R, 12 I - 0 Pistol (S) defeatable 142F **2111**[2] Black 4, 4X I - 0 Pistol (S) defeatable 142D **2111**[2] Black 4, 4X I - 0 - Test Pistol (S) defeatable 142D **2115**[2]	200 mm 7.9 in Pistol (S) 1400 **1020** 320 mm 12.6 in Pistol (S) 1400 **1032**	3729 **7541**	1 AC NC 3999 **0701** 1 AC NO 3999 **0702**	1 AC NO+NC 3999 **U041** 2 AC NO+NC 3999 **U042**	3798 **3010**[3]
	4 P	3860 **6010**							3798 **4010**[3]
200 A J	3 P	3860 **3020**				3729 **7542**			3798 **3020**[3]
	4 P	3860 **6020**							3798 **4020**[3]
400 A J	3 P	3860 **3040**							standard
	4 P	3860 **6040**							
600 A J	3 P	3850 **3060**	Black 3859 **6011**	Black 1, 3R, 12 I - 0 Pistol (S) defeatable 143F **3111**[2] Black 4, 4X I - 0 Pistol (S) defeatable 143D **3111**[2]	200 mm 7.9 in Pistol (S) 1400 **1220** 320 mm 12.6 in Pistol (S) 1400 **1232**	consult us			3 P 3898 **3080**[3] 4 P 3898 **4080**[3]
	4 P	3850 **6060**							
800 A J	3 P	3850 **3080**							
	4 P	3850 **6080**							

(1) Includes mechanism, shaft and internal handle. Please order external handle.
(2) Nema type.
(3) Bottom terminal shrouds (the top terminal shrouds is delivered with the switch).
(4) Not UL.

This document is not a contract. SOCOMEC reserves the right to modify features without prior notice in view of continued improvement. 2008 - 2009

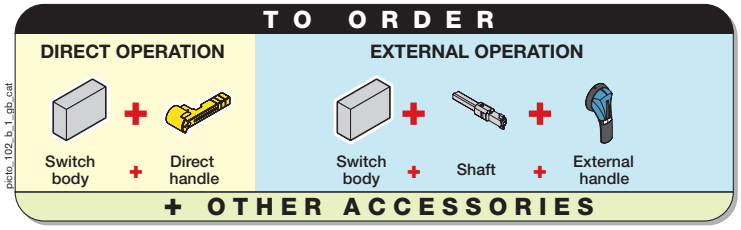

References

Side operation

Rating (A)	No. of poles	Switch body only	Direct handle	"Flange" handle	Cable for "Flange" handle	Rod for "Flange" handle	S type auxiliary contacts	Terminal shrouds
30 A CC	3 P	3716 **3003**	Black 3729 **7900**	Standard handle 1, 3, 3R, 4, 12 defeatable 3729 **9002**(1) Chrome-plated handle 1, 3, 3R, 4, 4X, 12 defeatable 3729 **9003**(1)	Mechanism for "Flange" handle 3729 **9902** 900 mm 36 inches 3729 **9992** 1500 mm 60 inches 3729 **9993** 3000 mm 120 inches 3729 **9994**	For enclosure depth of 6 inches minimum 3729 **9940** For enclosure depths from 8 to 24 inches 3729 **9500**	1 AC NO+NC 3999 **U041** 2 AC NO+NC 3999 **U042**	standard
	4 P	3716 **6003**						
30 A J	3 P	3716 **3005**	Black 3729 **7901**					
	4 P	3716 **6005**						
60 A J	3 P	3716 **3006**						
	4 P	3716 **6006**						
100 A J	3 P	3716 **3010**						3798 **3010**(2)
	4 P	3716 **6010**						3798 **4010**(2)
200 A J	3 P	3716 **3020**						3798 **3020**(2)
	4 P	3716 **6020**						3798 **4020**(2)
400 A J	3 P	3716 **3040**						standard
	4 P	3716 **6040**						

(1) Nema type.
(2) Bottom terminal shrouds (the top terminal shrouds is delivered with the switch).

This document is not a contract. SOCOMEC reserves the right to modify features without prior notice in view of continued improvement. 2008 - 2009

FUSERBLOC UL
30 to 800 A
(North American market)

NFPA 79 compliant accessories

"Flange" handle for side operated

sirco_246_a_1_cat

Use

For side operated switches only provides heavy duty flange style operation.
Meets both UL508A and NFPA 79 requirement.
Please order cable or rod link between handle and switch.

References

Rating (A)	Handle type	Nema type	References
30 … 400	standard handle	1, 3, 3R, 4, 12	3729 **9002**(1)
30 … 400	chrome-plated handle	1, 3, 3R, 4, 4X, 12	3729 **9003**(1)

(1) Defeatable.

Cables for "Flange" handle for side operated

sirco_247_a_1_cat

ul_042_b_1

Use

Link between "Flange" handle and side operated switches, please order mechanism and "Flange" handle.

References

Rating (A)	Type	Reference
30 … 400	mechanism for "Flange" handle	3729 **9902**

Cable length (inches)	Cable length (mm)	References
36	900	3729 **9992**
60	1500	3729 **9993**
120	3000	3729 **9994**

Rod for "Flange" handle for side operated

ul_043_a

Use

Link between "Flange" handle and side operated switches.
Mechanism included, cost effective solution.
Please order "Flange" handle.

References

For enclosure depth (inches)	For enclosure depth (mm)	References
6	150	3729 **9940**
8 ... 24	203 ... 613	3729 **9500**

NFPA 79 kit for front operated

ul_121_b

Use

For front operated switches only. Meets both UL508A and NFPA 79 requirement.
Kit includes mechanism, shaft and internal handle.
Please order external handle (see page A.297).

References

Rating (A)	References
CD 30	3729 **4532**
30 ... 100	3729 **7541**
200 ... 400	3729 **7542**
600 ... 800	consult us

This document is not a contract. SOCOMEC reserves the right to modify features without prior notice in view of continued improvement. 2008 - 2009

Accessories

Direct handle

Fig. 1

Fig. 2

Fig. 3

For dimensions, see page A.288 "SIRCO UL".

References

Front operation

Rating (A)	Handle colour	Fuse	Fig.	References
CD 30	Black	CC	1	3729 **4012**
CD 30	Black	J	1	3729 **4014**
30	Black	CC	2	3629 **7910** (1)
30 … 400	Black	J	2	3629 **7910** (1)
600 … 800	Black		2	3859 **6011**

(1) Not UL.

Side operation

Rating (A)	Handle colour	Fuse	Fig.	References
30	Black	CC	3	3729 **7900**
30 … 400	Black	J	3	3729 **7901**

Door interlocked external front handle

M type handle

S1 type handle

S2 type handle

S3 type handle

References

Rating (A)	Handle type	Handle colour	Nema type	Defeatable handle(1)	Test	References
CD 30	M	Black	4, 4X	no	I - 0	2109 **0U16**
CD 30	M	Red/Yellow	4, 4X	no	I - 0	2109 **0U15**
CD 30	S1	Black	1, 3R, 12	yes	I - 0	141F **2111**
CD 30	S1	Red/Yellow	1, 3R, 12	yes	I - 0	141G **2111**
CD 30	S1	Black	4, 4X	yes	I - 0	141D **2111**
CD 30	S1	Red/Yellow	4, 4X	yes	I - 0	141E **2111**
CD 30	S1	Black	4, 4X	yes	I - 0 - Test	141D **2115**
CD 30	S1	Red/Yellow	4, 4X	yes	I - 0 - Test	141E **2115**
30 … 400	S2	Black	1, 3R, 12	yes	I - 0	142F **2111**
30 … 400	S2	Red/Yellow	1, 3R, 12	yes	I - 0	142G **2111**
30 … 400	S2	Black	4, 4X	yes	I - 0	142D **2111**
30 … 400	S2	Red/Yellow	4, 4X	yes	I - 0	142E **2111**
30 … 400	S2	Black	4, 4X	yes	I - 0 - Test	142D **2115**
30 … 400	S2	Red/Yellow	4, 4X	yes	I - 0 - Test	142E **2115**
600 … 800	S3	Black	1, 3R, 12	yes	I - 0	143F **3111**
600 … 800	S3	Red/Yellow	1, 3R, 12	yes	I - 0	143G **3111**
600 … 800	S3	Black	4, 4X	yes	I - 0	143D **3111**
600 … 800	S3	Red/Yellow	4, 4X	yes	I - 0	143E **3111**

(1) Allow the door to be opened when the switch is on ON position.
Please consult us for non defeatable handles.

This document is not a contract. SOCOMEC reserves the right to modify features without prior notice in view of continued improvement. 2008 - 2009

FUSERBLOC UL
30 to 800 A
(North American market)

Accessories

Shaft extensions for external handle

acces_143_a_1_cat

sirco_090_a_1_cat

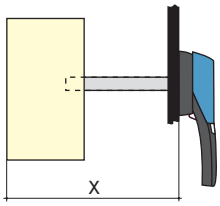

acces_202_a

References

Rating (A)	Handle type	Shaft length (in/mm)	References
CD 30	M	4.7 / 120	379M **0512**
CD 30	M	7.9 / 200	379M **0520**
CD 30	M	12.6 / 320	379M **0532**
CD 30	M	15.7 / 400	379M **0540**
CD 30	S1	7.9 / 200	1401 **0520**
CD 30	S1	12.6 / 320	1401 **0532**
CD 30	S1	15.7 / 400	1401 **0540**
30 … 400	S2	7.9 / 200	1400 **1020**
30 … 400	S2	12.6 / 320	1400 **1032**
30 … 400	S2	15.7 / 400	1400 **1040**
600 … 800	S3	7.9 / 200	1400 **1220**
600 … 800	S3	12.6 / 320	1400 **1232**
600 … 800	S3	15.7 / 400	1400 **1240**

X minimum dimension

Rating (A)	Handle type M		Handle type S	
	in	mm	in	mm
CD 30 / CC	4.73	120	5.32	135
CD 30 / J	5.32	135	5.98	152
30 / CC	-	-	5.98	152
30 … 100 / J	-	-	7.04	179
200	-	-	7.40	188
400	-	-	6.96	177
600 … 800	-	-	10.11	255

S type auxiliary contacts

acces_051_a_1_cat

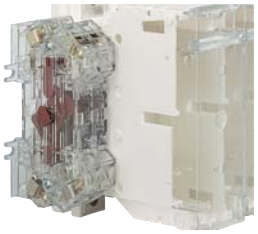
acces_083_a_1_cat

Use
For the FUSERBLOC UL 30 to 400 A, indication of the 0 and I positions by 1 to 4 NO + NC auxiliary contacts.

Electrical principle
The S type NO + NC auxiliary contacts can be configurable in 2 NO or 2 NC.

Cabling
By cage with 10 mm² max section.

High electrical characteristics
30 000 operations - 600 VAC - 10 A.

References
NO + NC auxiliray contacts

Rating (A)	No. of AC	References
30 … 800	1	3999 **U041**
30 … 800	2	3999 **U042**

Characteristics

Rating (A)	Nominal current (A)	Operating current I_e (A) 250 VAC AC-13	400 VAC AC-13	24 VDC DC-13	48 VDC DC-13
30 … 800	20	10	8	14	6

This document is not a contract. SOCOMEC reserves the right to modify features without prior notice in view of continued improvement. 2008 - 2009

Accessories

U type pre-break auxiliary contacts for front operation

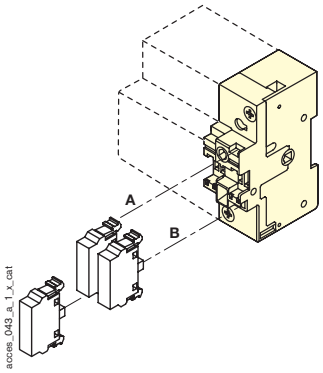

acces_043_a_1_x_cat

acces_056_a_1_cat

Use

The different functions (pre-break, 0 and 1 indication, TEST feature) are configurable easily with pegs (1 or 2 pegs per position). 2 superposed auxiliary contacts max can be fitted by emplacement.

- For CD 30 A / CC, max of 4 ACs (8 with additional holder).
- For CD 30 A / J, max of 2 ACs (6 with additional holder).
- For 30 to 100 A / J, max of 4 ACs.
- For 200 to 800 A / J, max of 8 ACs.

Cabling to the control circuit

by terminals with a max section of 2 x 2.5 mm².

References

NO auxiliary contact

Rating (A)	No. of AC	Reference
CD 30 … 800	1	3999 **0701**

NC auxiliary contact

Rating (A)	No. of AC	Reference
CD 30 … 800	1	3999 **0702**

Contact holder for additional auxiliary contacts

Rating (A)	Fuse	References
CD 30	CC	3999 **0710**(1)
CD 30	J	3999 **0710**(2)

(1) From 5 to 8 ACs, 4 ACs can be fitted on the switch body.
(2) From 3 to 6 ACs, 2 ACs can be fitted on the switch body.

Characteristics

Rating (A)	Contact type	Nominal current (A)	Operating current I_e (A) 250 VAC AC-13	400 VAC AC-13	24 VDC DC-13	48 VDC DC-13
30 … 800	NO + NC	10	6	4	5	3

Terminal shrouds

fuser_314_a_1_cat

Use

Bottom protection against direct contacts with the terminals or the connection parts.

The top terminal shrouds is delivered with the switch.

References

Rating (A)	No. of poles	References
CD 30 … 60	3/4 P	standard
100	3 P	3798 **3010**(1)
100	4 P	3798 **4010**(1)
200	3 P	3798 **3020**(1)
200	4 P	3798 **4020**(1)
400	3/4 P	standard
600 … 800	3 P	3898 **3080**(1)
600 … 800	4 P	3898 **4080**(1)

(1) Bottom terminal shrouds (the top terminal shrouds delivered with the switch).

This document is not a contract. SOCOMEC reserves the right to modify features without prior notice in view of continued improvement. 2008 - 2009

FUSERBLOC UL
30 to 800 A
(North American market)

Functions
References
Accessories
Characteristics
Dimensions

Accessories

Top and bottom cage terminals

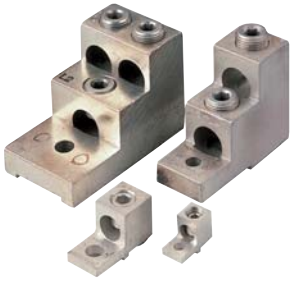

sirco_098_a_1_cat

Use
Connection of bare copper cables on to the terminals (no spade lugs).

References

Rating (A)	Fuse	Lugs per kit	No. cable per terminal	Connection type	Cable type	References
CD 30	CC/J		1	#14 - #10	Cu	standard
30	CC		1	#14 - #10	Cu	standard
30 … 60	J		1	#10 - #3	Cu	standard
100	J	6	1	#14 - 2 / 0	Cu / Al	3954 **6010**
100	J	8				3954 **8010**
200	J	6	1	#6 - 3 / 0	Cu / Al	3954 **6020**
200	J	8				3954 **8020**
400 …800	J/L	6	2	2 x #2 - 2 x 600	Cu / Al	3954 **6060**
400 …800	J/L	8				3954 **8060**

Neutral links

References

Rating (A)	Fuse	Pack qty	References
60	J	3	3799 **9006**
60	J	4	3799 **8006**
100	J	3	3799 **9010**
100	J	4	3799 **8010**
200	J	3	3799 **9020**
200	J	4	3799 **8020**
400	J	3	3799 **9040**
400	J	4	3799 **8040**
600 … 800	J / L	3	3799 **9080**
600 … 800	J / L	4	3799 **8080**

Class T fuse adapter

Use
The adapter allows the installation of class T fuses in the FUSERBLOC fuse disconnect switches.

References

Rating (A)	Class T fuse size (in/mm)	References for 3 pole	References for 4 pole
100	2.34 / 59.5	3729 **8010**	3729 **9010**
200	2.48 / 63	3729 **8020**	3729 **9020**
400	2.71 / 69	3729 **8040**	3729 **9040**
600	2.95 / 75	3729 **8060**	3729 **9060**
800	3.17 / 80.5	3729 **8080**	3729 **9080**

This document is not a contract. SOCOMEC reserves the right to modify features without prior notice in view of continued improvement. 2008 - 2009

UL and CSA characteristics

Technical characteristics	CD 30 A	CD 30 A	30 A	30 A	60 A
Short-circuit rating at 600 VAC (kA)	65	65	100	100 (3)	200
Fuse type	CC	J	CC	J	J
Max. fuse rating (A)	30	30	30	30	60
Max. horsepower rating / Max. motor FLA current 3 ph					
220-240 VAC	7.5 / 22	7.5 / 22	7.5 / 22	7.5 / 22	15 / 42
440-480 VAC	15 / 21	15 / 21	15 / 21	15 / 21	30 / 40
600 VAC	20 / 22	20 / 22	20 / 22	20 / 22	50 / 52
125 VDC(1)	3 / 25	3 / 25	3 / 25	3 / 25	3 / 25
250 VDC(1)	5 / 20	5 / 20	5 / 20	5 / 20	10 / 38
Mechanical characteristics					
Endurance (number of operating cycles)	10 000	10 000	10 000	10 000	10 000
Terminal lugs					
Type	integrated	integrated	integrated	integrated	integrated
Min. conn. section / AWG(2)	#14	#14	#14	#10	#10
Max. conn. section / AWG(2)	#10	#10	#10	#3	#3

(1) 2 pole in series.
(2) AWG: cross section of the American cable.
(3) 200 kA on request.

IEC 60947-1 and 60947-3 characteristics

Technical characteristics		CD 30 A	CD 30 A	30 A	30 A	60 A
Rated insulation voltage U_i (V)		800	800	750	750	750
Rated impulse withstand voltage U_{imp} (kV)		8	8	8	8	8
Rated operation current I_e (A)						
Rated voltage	Load duty category	A(1)	A(1)	A(1)	A(1)	A(1)
400 VAC	AC-22 A	32	32	32	32	63
	AC-23 A	32	32	32	32	63
690 VAC	AC-22 A	32	32	32	32	63
	AC-23 A	32	32	32	32	63
Operational power in AC-23 A (kW)(1)(2)						
At 400 VAC without pre-break AC		15	15	15	15	30
At 500 VAC without pre-break AC		18.5	18.5	18.5	18.5	40
At 690 VAC without pre-break AC		25	25	25	25	55
Conditional short-circuit current(3)						
Rated peak withstand current (kA peak)		5.5	5.5	7.6	17.6	17.6
Connection						
Minimum Cu cable section (mm^2)		2.5	2.5	6	6	6
Maximum Cu busbar width (mm)		16	32	25	50	50

(1) Category with index A = frequent operation.
(2) The power value is given for information only, the current values vary from one manufacturer to another.
(3) For a rated operating voltage U_e = 400 VAC.

This document is not a contract. SOCOMEC reserves the right to modify features without prior notice in view of continued improvement. 2008 - 2009

FUSERBLOC UL
30 to 800 A
(North American market)

UL and CSA characteristics

Technical characteristics	100 A	200 A	400 A	600 A	800 A
Short-circuit rating at 600 VAC (kA)	200	200	200	200	200
Fuse type	J	J	J	J	L
Max. fuse rating (A)	100	200	400	600	800
Max. horsepower rating / Max. motor FLA current 3 ph					
220-240 VAC	30 / 80	60 / 154	125 / 312	200 / 480	200 / 480
440-480 VAC	60 / 77	125 / 156	250 / 302	500 / 590	500 / 590
600 VAC	75 / 77	150 / 144	350 / 336	500 / 472	500 / 472
125 VDC(1)	7.5 / 58	15 / 112	20 / 148		
250 VDC(1)	20 / 38	40 / 140(2)	50 / 173(2)		
Mechanical characteristics					
Endurance (number of operating cycles)	10 000	8 000	6 000	5 000	5 000
Terminal lugs					
Type	option	option	option	option	option
Min. conn. section / AWG(3)	#14	#6	2 x #2	2 x #2	2 x #2
Max. conn. section / AWG(3)	2 / 0	3 / 0	2 x 600 kcmil	2 x 600 kcmil	2 x 600 kcmil

(1) 2 pole in series.
(2) 3 pole in series.
(3) AWG: cross section of the American cable.

IEC 60947-1 and 60947-3 characteristics

Technical characteristics		100 A	200 A	400 A	600 A	800 A
Rated insulation voltage U_i (V)		750	750	800	1 000	1 000
Rated impulse withstand voltage U_{imp} (kV)		8	8	8	12	12
Rated operation current I_e (A)						
Rated voltage	Load duty category	A(1)	A(1)	A(1)	A(1)	A(1)
400 VAC	AC-22 A	100	200	400	630	800
	AC-23 A	100	200	400	630	800
690 VAC	AC-22 A	100	200	400	630	800
	AC-23 A	100	200	250	630	630
Operational power in AC-23 A (kW)(1)(2)						
At 400 VAC without pre-break AC		51	100	220	355	450
At 500 VAC without pre-break AC		63	140	220	450	560
At 690 VAC without pre-break AC		90	185	220	600	600
Conditional short-circuit current(3)						
Rated peak withstand current (kA peak)		22	32	36	80	80
Connection						
Minimum Cu cable section (mm^2)		25	95	185	2 x 150	-
Maximum Cu busbar width (mm)		20	32	45	100	100

(1) Category with index A = frequent operation.
(2) The power value is given for information only, the current values vary from one manufacturer to another.
(3) For a rated operating voltage U_e = 400 VAC.

This document is not a contract. SOCOMEC reserves the right to modify features without prior notice in view of continued improvement. 2008 - 2009

Dimensions

Front operation

• **FUSERBLOC UL CD 30 A / CC**

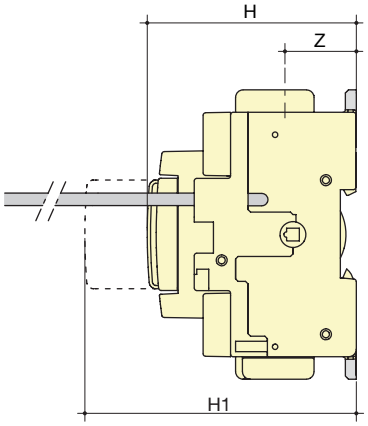

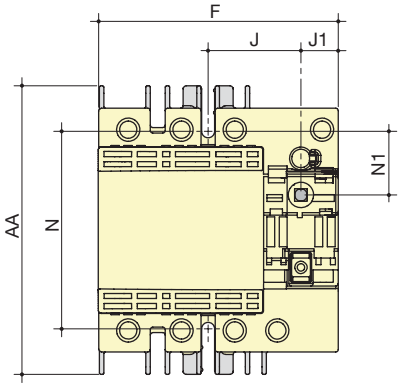

fuser_655_a_1_x_cat

Switch body										Switch mounting				Connection terminals			
F		H		H1		J		J1		N		N1		AA		Z	
in	mm	in	mm	in	mm	in	mm	in	mm	in	mm	in	mm	in	mm	in	mm
3.78	96	3.28	83.5	5.19	132	1.47	37.5	0.59	15	3.13	79.5	1	25.5	4.56	116	1.12	28.5

• **FUSERBLOC UL CD 30 A / J**

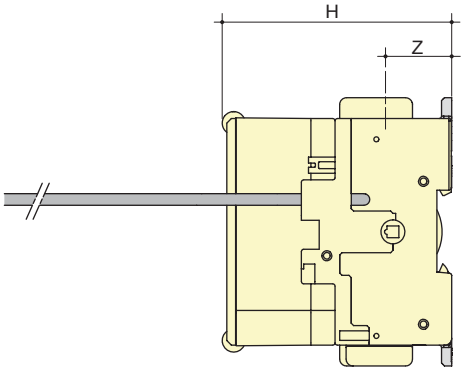

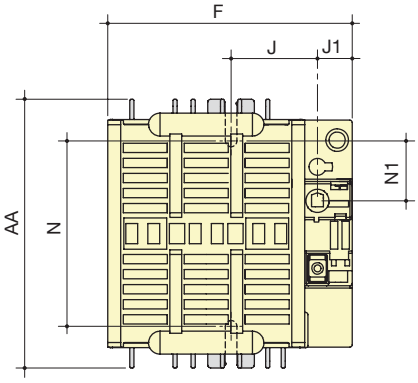

fuser_656_a_1_x_cat

Switch body										Switch mounting				Connection terminals			
F		H		J		J1		N		N1		AA		Z			
in	mm	in	mm	in	mm	in	mm	in	mm	in	mm	in	mm	in	mm	in	mm
4.13	105	3.89	99	1.47	37.5	0.59	15	3.30	84	1	25.5	4.56	116	1.12	28.5		

This document is not a contract. SOCOMEC reserves the right to modify features
without prior notice in view of continued improvement. 2008 - 2009

FUSERBLOC UL
30 to 800 A
(North American market)

Dimensions

Front operation

• **FUSERBLOC UL 30 A / CC, 30 A / J and 60 A / J**

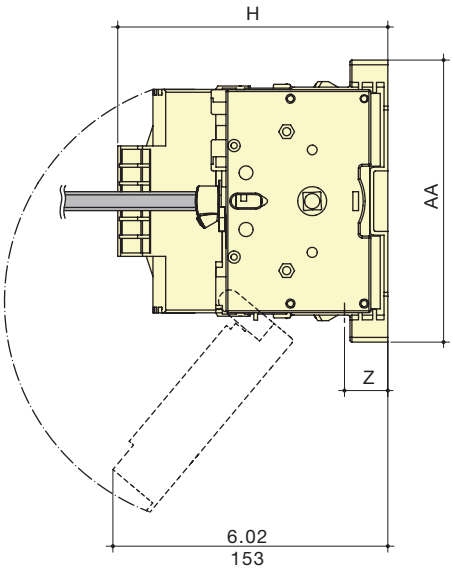

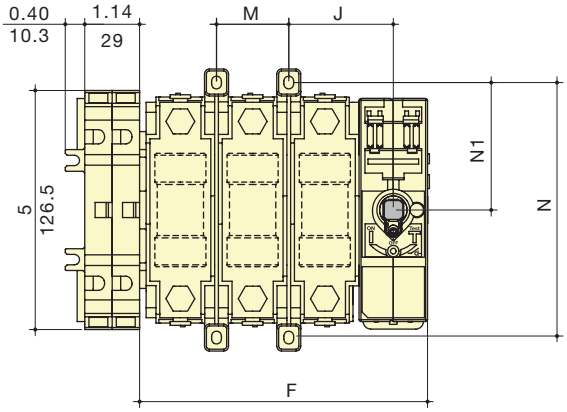

fuser_657_a_1_x.cat

Rating / Fuse	Switch body F 3p. in	F 3p. mm	F 4p. in	F 4p. mm	H in	H mm	J in	J mm	Switch mounting M in	M mm	N in	N mm	N1 in	N1 mm	Connection terminals AA in	AA mm	Z in	Z mm
30 A / CC	4.92	125	6.06	154	3.89	99	1.77	45	1.14	29	5.31	135	2.63	66.5	5.87	149	1.21	31
30 A / J	5.51	140	6.85	174	4.58	116.5	1.97	50	1.33	34	5.31	135	2.63	66.5	5.87	149	0.94	24
60 A / J	5.98	152	7.48	190	5.62	143	2.12	54	1.5	38	5.31	135	2.63	66.5	5.87	149	0.95	24.5

• **FUSERBLOC UL 100 and 200 A / J**

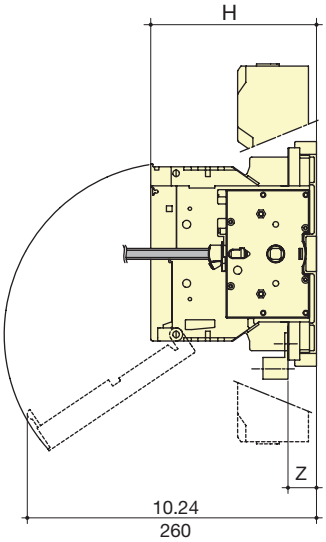

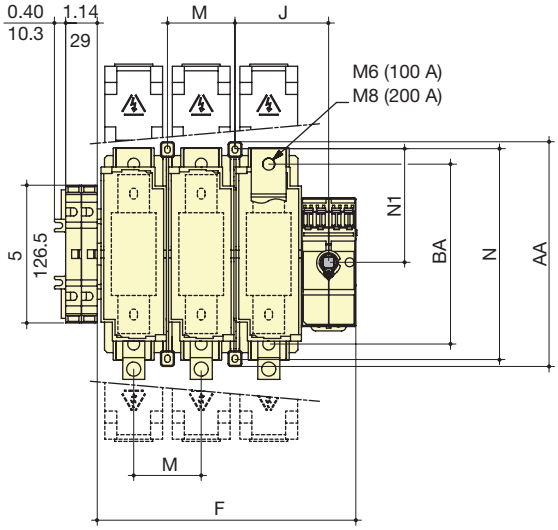

fuser_658_a_1_x.cat

Rating / Fuse	Switch body F 3p. in	F 3p. mm	F 4p. in	F 4p. mm	H in	H mm	J in	J mm	Switch mounting M in	M mm	N in	N mm	N1 in	N1 mm	Connection terminals AA in	AA mm	BA in	BA mm	Z in	Z mm
100 A / J	7.63	194	9.68	246	5.62	143	2.63	67	2.05	52	6.61	168	3.28	83.5	7.19	182.5	5.55	141	1	25.4
200 A / J	9.37	238	11.81	300	6	152	3.38	86	2.44	62	7.56	192	3.75	95.5	8.13	206.5	6.53	166	1.03	26

This document is not a contract. SOCOMEC reserves the right to modify features without prior notice in view of continued improvement. 2008 - 2009

Dimensions

Front operation

• FUSERBLOC UL 400 A / J

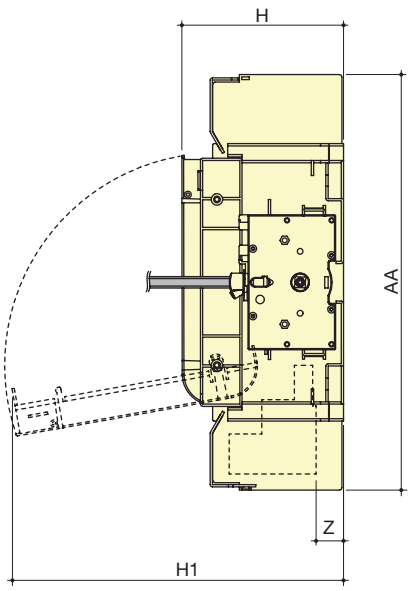

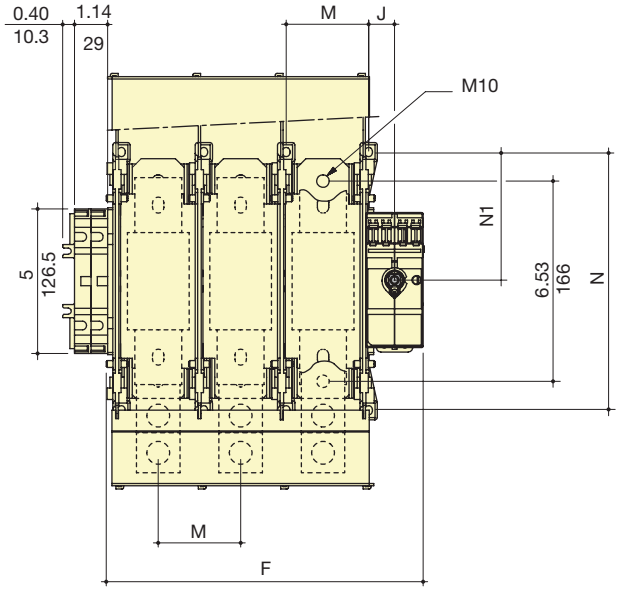

fuser_659_a_1_x_cat

Switch body								Switch mounting								Connection terminals			
F 3p.		F 4p.		H		H1		J		M		N		N1		AA		Z	
in	mm	in	mm	in	mm	in	mm	in	mm	in	mm	in	mm	in	mm	in	mm	in	mm
10.8	276	13.7	348	5.56	141.5	11.41	290	0.88	22.5	2.84	72	8.83	224	4.41	112	14.31	363.5	1.06	27

• FUSERBLOC UL 600 A / J and UL 800 A / L

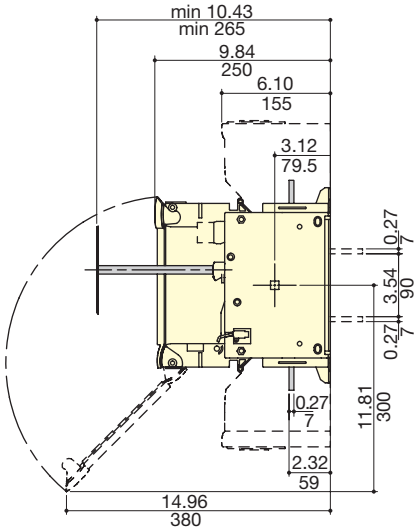

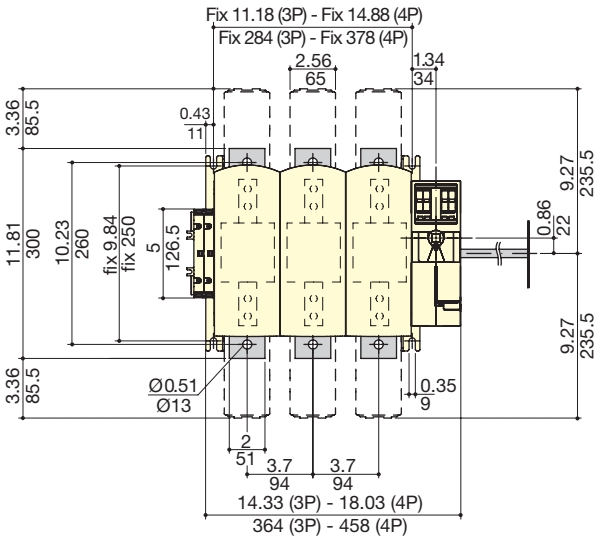

fuser_631_a_1_gb_cat

This document is not a contract. SOCOMEC reserves the right to modify features without prior notice in view of continued improvement. 2008 - 2009

FUSERBLOC UL
30 to 800 A
(North American market)

Dimensions

Side operation

• **FUSERBLOC UL 30 A/CC, 30 A/J and 60 A/J**

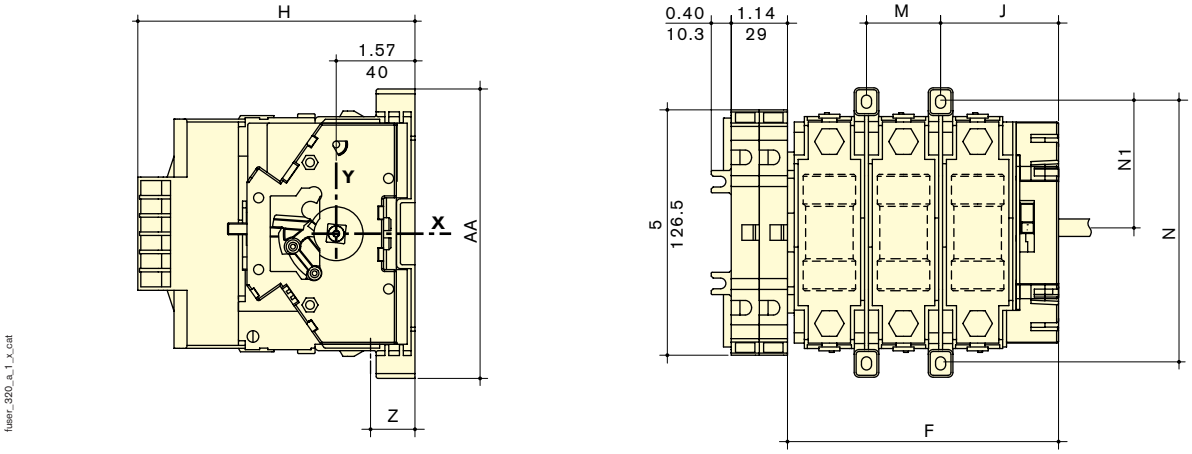

Rating / Fuse	Switch body F 3p. in	F 3p. mm	F 4p. in	F 4p. mm	H in	H mm	J in	J mm	Switch mounting M in	M mm	N in	N mm	N1 in	N1 mm	Connection terminals AA in	AA mm	Z in	Z mm
30 A / CC	4.37	111	5.51	140	3.89	99	1.97	50	1.14	29	5.31	135	2.63	66.5	5.87	149	1.21	31
30 A / J	4.96	126	6.30	160	4.58	116.5	2.16	55	1.33	34	5.31	135	2.63	66.5	5.87	149	0.94	24
60 A / J	5.45	138.5	6.95	176.5	5.62	143	2.32	59	1.5	38	5.31	135	2.63	66.5	5.87	149	0.95	24.5

• **FUSERBLOC UL 100 and 200 A/J**

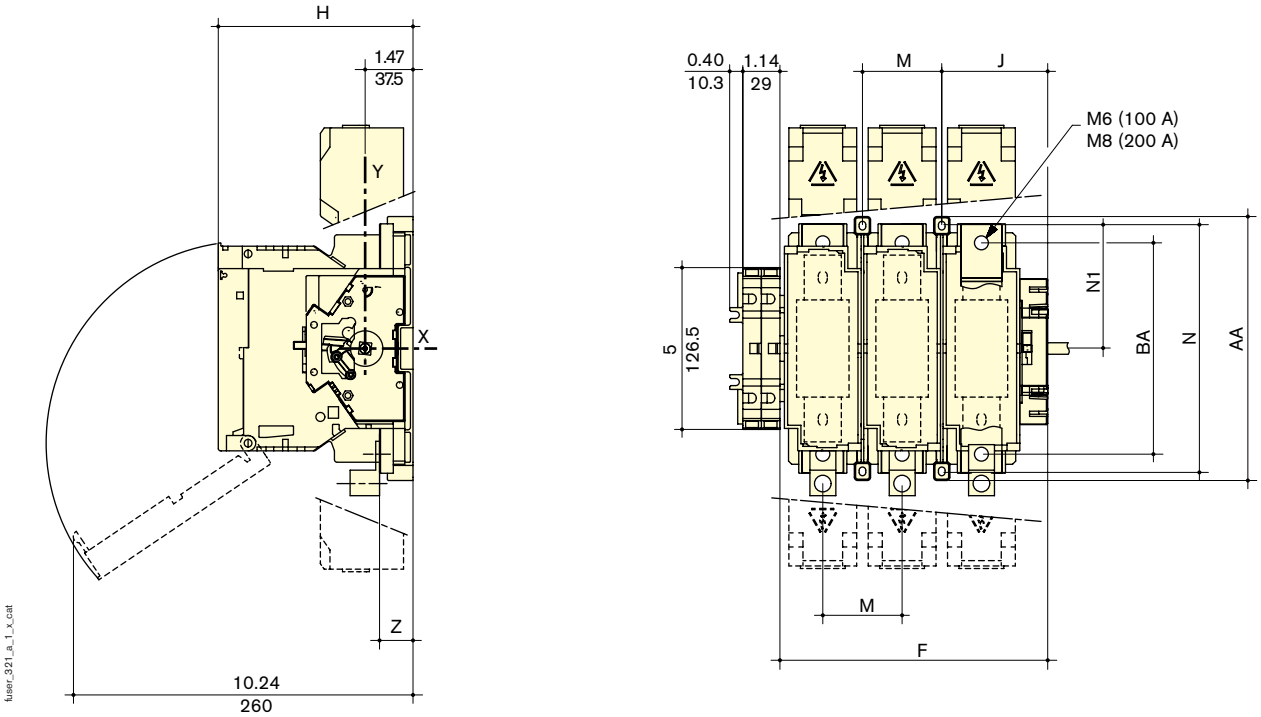

Rating / Fuse	Switch body F 3p. in	F 3p. mm	F 4p. in	F 4p. mm	H in	H mm	J in	J mm	Switch mounting M in	M mm	N in	N mm	N1 in	N1 mm	Connection terminals AA in	AA mm	BA in	BA mm	Z in	Z mm
100 A / J	7.09	180	9.13	232	5.63	143	2.86	73	2.05	52	6.61	168	3.28	83.5	7.19	182.5	5.55	141	1	25.5
200 A / J	9.47	240.5	11.9	302.5	6	152	4.47	113.5	2.44	62	7.56	192	3.75	95.5	8.13	206.5	6.53	166	1.03	26

This document is not a contract. SOCOMEC reserves the right to modify features without prior notice in view of continued improvement. 2008 - 2009

Dimensions

▶ *Side operation*

• FUSERBLOC UL 400 A / J

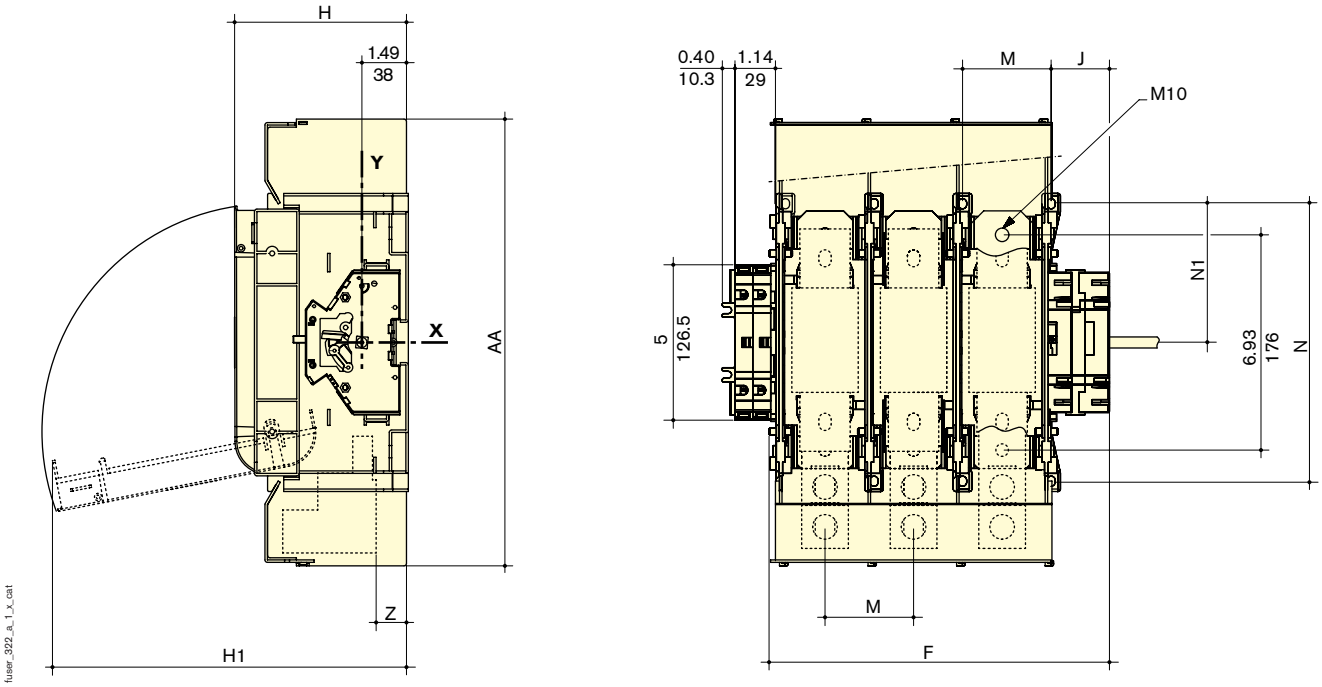

Switch body												Switch mounting				Connection terminals			
F 3p.		F 4p.		H		H1		J		M		N		N1		AA		Z	
in	mm	in	mm	in	mm	in	mm	in	mm	in	mm	in	mm	in	mm	in	mm	in	mm
10.9	277	13.74	349	5.57	141.5	11.42	290	1.89	48	2.84	72	8.82	224	4.41	112	14.31	363.5	1.06	27

This document is not a contract. SOCOMEC reserves the right to modify features
without prior notice in view of continued improvement. 2008 - 2009

UL fuses
0.25 to 800 A

Functions
References
Dimensions

fusib_129_a_1_cat

fusib_130_a_1_cat

fusib_131_a_1_cat

fusib_132_a_1_cat

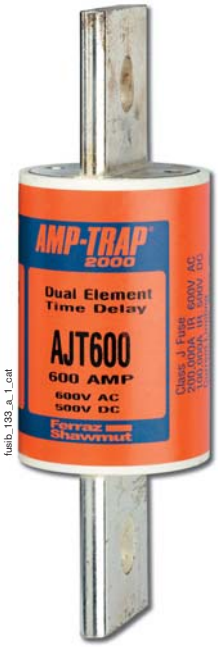

fusib_133_a_1_cat

Functions

The time delay fuses provide IEC Type “2” (no damage) protection to main, feeder and branch circuits, for all types of loads.

Advantages

Performance
- High breaking capacity: 200 kA at 600 V.
- High short circuit limitation power.
- Simple, reliable selectivity.

Reliability

Absolute protection in time guaranteed by the simplicity of manufacture and function (Joule effect).

Safety

The energy given off when eliminating the fault remains inside the cartridge.

Conformity to standards

Class CC
- UL listed to Standard 248-4
- DC listed to UL Standard 198L
- CSA certified to Standard C22.2 - No. 248.4

Class J
- UL listed to Standard 248-4
- DC listed to UL Standard 198L
- CSA certified to Standard C22.2 - No. 248.4
- IEC-269-2-1

Class L
- UL listed to Standard 248-10
- DC listed to UL Standard 198L
- CSA certified to Standard C22.2 - No. 248.10

UL fuses and fuse combination switch possibilities

Fuse combination switch recommanded

Rating (A)	Class CC	Class J	Class L
0.25 … 30	FUSERBLOC CD CC 30 A / FUSERBLOC CC 30 A	FUSERBLOC CD 30 A / FUSERBLOC 30 A	/
35 … 60	/	FUSERBLOC J 60 A	/
70 … 100	/	FUSERBLOC J 100 A	/
110 … 200	/	FUSERBLOC J 200 A	/
225 … 400	/	FUSERBLOC J 200 A	/
450 … 600	/	FUSERBLOC J 600 A	/
601 … 800	/	/	FUSERBLOC L 800 A

This document is not a contract. SOCOMEC reserves the right to modify features without prior notice in view of continued improvement. 2008 - 2009

References

Time delay		Class CC	Class J	Class L
Rating (A)	Voltage (VAC)	References	References	References
0.25	600	6CC0 **2500**		
0.5	600	6CC0 **5000**		
1	600	6CC0 **0001**	6J00 **0001**	
1.25	600	6CC1 **2501**	6J12 **5001**	
1.5	600	6CC1 **5001**	6J15 **0001**	
1.6	600	6CC1 **6001**	6J16 **0001**	
2	600	6CC0 **0002**	6J00 **0002**	
2.5	600	6CC2 **5002**	6J25 **0002**	
3	600	6CC0 **0003**	6J00 **0003**	
3.2	600	6CC3 **2003**	6J32 **0003**	
4	600	6CC0 **0004**	6J00 **0004**	
5	600	6CC0 **0005**	6J00 **0005**	
6	600	6CC0 **0006**	6J00 **0006**	
6.3	600	6CC6 **3006**	6J63 **0006**	
8	600	6CC0 **0008**	6J00 **0008**	
10	600	6CC0 **0010**	6J00 **0010**	
12	600	6CC0 **0012**	6J00 **0012**	
15	600	6CC0 **0015**	6J00 **0015**	
17.5	600		6J00 **0017**	
20	600	6CC0 **0020**	6J00 **0020**	
25	600	6CC0 **0025**	6J00 **0025**	
30	600	6CC0 **0030**	6J00 **0030**	
35	600		6J00 **0035**	
40	600		6J00 **0040**	
45	600		6J00 **0045**	
50	600		6J00 **0050**	
60	600		6J00 **0060**	
70	600		6J00 **0070**	
80	600		6J00 **0080**	
90	600		6J00 **0090**	
100	600		6J00 **0100**	
110	600		6J00 **0110**	
125	600		6J00 **0125**	
150	600		6J00 **0150**	
175	600		6J00 **0175**	
200	600		6J00 **0200**	
225	600		6J00 **0225**	
250	600		6J00 **0250**	
300	600		6J00 **0300**	
350	600		6J00 **0350**	
400	600		6J00 **0400**	
450	600		6J00 **0450**	
500	600		6J00 **0500**	
600	600		6J00 **0600**	
601	600			6L00 **0600**
650	600			6L00 **0650**
700	600			6L00 **0700**
800	600			6L00 **0800**

Dimensions

• **Class CC**

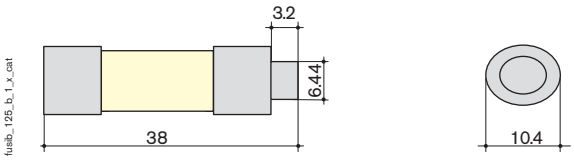

• **Class J**

1 to 60 A

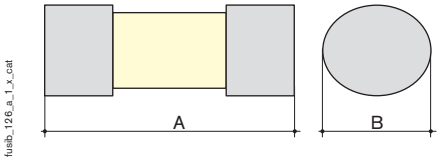

Rating (A)	A	B
1 … 30	57	21
35 … 60	60	27

• **Class J**

70 to 600 A

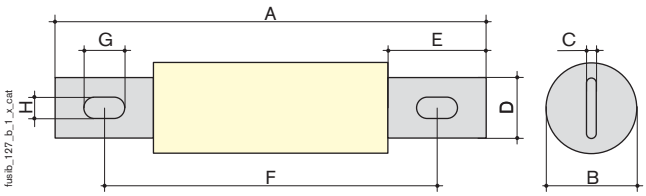

Rating (A)	A	B	C	D	E	F	G	H
70 …100	117	29	3.2	19	25	92	10	7
110 … 200	146	41	4.8	29	35	111	10	7
225 … 400	181	54	6.3	41	48	133	14	10
450 … 600	203	64	9.5	51	54	152	18	13

• **Class L**

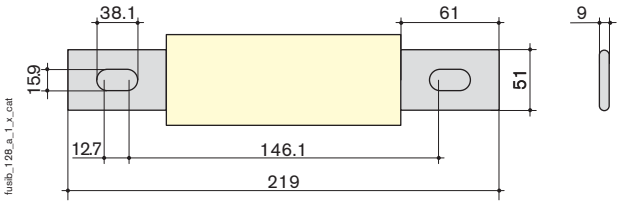

This document is not a contract. SOCOMEC reserves the right to modify features without prior notice in view of continued improvement. 2008 - 2009

SELECTION GUIDE

PUBLIC POWER DISTRIBUTION

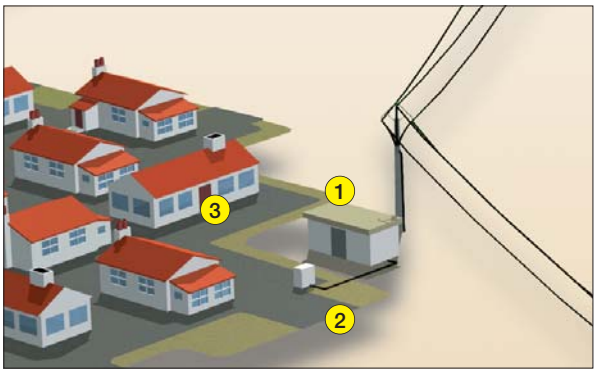

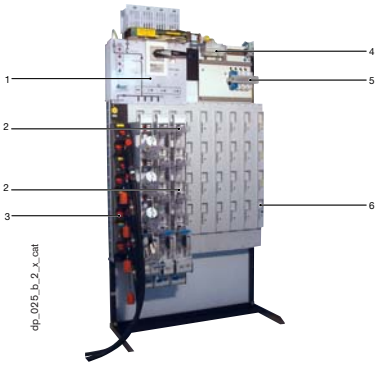

TIPI

YOU NEED

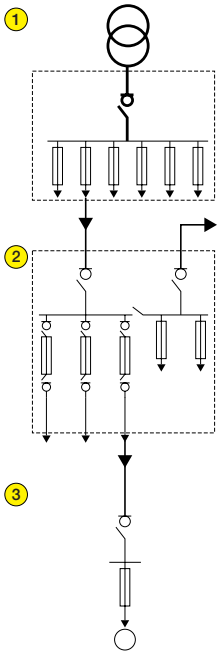

1 In the MV/LV transformer station	●
2 In the distribution cabinets	
3 Closest to the LV consumer	

see page A.312

This document is not a contract. SOCOMEC reserves the right to modify features without prior notice in view of continued improvement. 2008 - 2009

The power suppliers, who are in charge of the maintenance, running and development of the infrastructures, must guarantee the continuity and quality of the public electricity distribution service.

It is with this guiding principle in mind that SOCOMEC has developed with and on behalf of electricity utilities a set of products dedicated to public power distribution. These products are today the most advanced on the market in terms of safety and functionality for the operator.

TRS

see page
A.313

Other components in the LV public distribution networks

see page
A.314

This document is not a contract. SOCOMEC reserves the right to modify features without prior notice in view of continued improvement. 2008 - 2009

TIPI

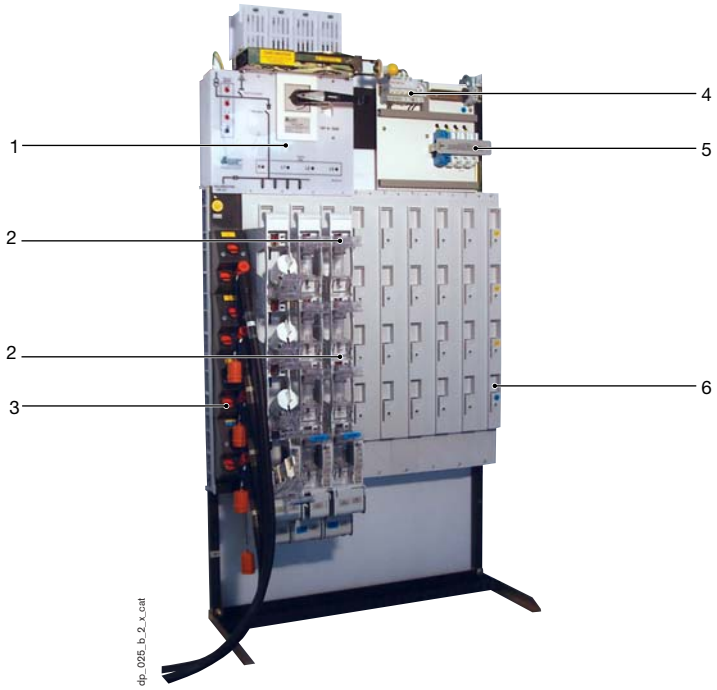

TIPI Substation Cable Distribution Board

1. 4-pole input unit with top short-circuiter and main on-load switch disconnector with fully visualised breaking. The neutral is fitted with an auxiliary contact earthing the LV neutral connection of the transformer to the masses of the substation when the switch is in the open position
2. Outgoing Distribution Units supplied separately (for 3 fuse links size 2 and a solid link size 2 on the neutral)
3. Emergency source re-supply device
4. Internal substation auxiliary circuit output unit (lighting, power outlet, reserves for other supply circuits)
5. Public lighting output unit placed bottom of the input unit
6. Temporary output units

Functions

Substation Cable Distribution Boards are placed bottom of the MV/LV transformer.
They provide, at the head of the LV voltage network, general disconnection breaking under load as well as safety isolation and the distribution of electrical energy on 4 or 8 outgoing distributor units protected by fuse links.

Conformity to standards

- HN 63 S 61 ed. 03/2002
- IEC 60439

Approvals and certifications

- EDF (French electricity company) approved no. 03E019/PLz and no. 03E020/PLz

General characteristics

- IP2X in operation and during maintenance.
- Top short-circuiter for the short-circuiting and earthing of the transformer LV input.
- Voltage taps top and bottom of the input unit, to check the absence of voltage.
- Main on-load switch disconnector AC 22 B with high short-circuit making capacity.
- Connectors for emergency source (generator set).
- Installation of outgoing distributor units with the power on.
- Installation of a temporary outgoing unit (building sites, fairgrounds…).
- Connection of outgoing distributor units using cable clamps with torque limiting screw heads.

References

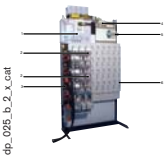

Panels

Transformer power	Thermal rating	Maximum number of outputs	Max. re-supply capacity	Dimensions W x H x D (mm)	TIPI 4-500 References	TIPI 8-1 200 References	TIPI 8-1 800 References
250 kVA	500 A	4 + 1 temporary	400 A: 1 cable	750 x 1 400 x 400	8057 **0001**		
630 kVA	1 200 A	8 + 1 temporary	1 200 A: 3 cables	1 000 x 1 800 x 400		8057 **0002**	
1 000 kVA	1 800 A	8 + 1 temporary	1 200 A: 3 cables	1 000 x 1 800 x 400			8057 **0003**

Output units

400 A output unit (fusebank) for 3 size 2 fuse links + N solid link	8061 **0001**	8061 **0001**	8061 **0001**
Temporary output unit	8061 **0002**	8061 **0002**	8061 **0002**
Fuses for outputs	consult us	consult us	consult us

Accessories

Floor mounting accessory	8061 **0007**	8061 **0008**	8061 **0008**
Insulated key for output fastening	8061 **0009**	8061 **0009**	8061 **0009**

This document is not a contract. SOCOMEC reserves the right to modify features without prior notice in view of continued improvement. 2008 - 2009

TRS

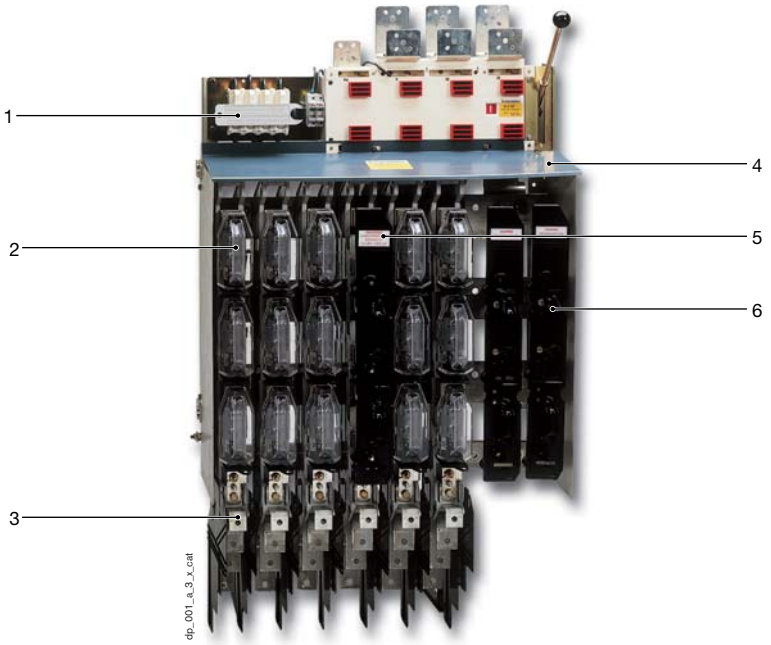

TRS Substation Cable Distribution Board

1. Output for street lighting: fuse switch disconnector
2. Fuse holder cover
3. Monobloc outgoing distributor unit
4. Horizontal protection screen
5. Testing and padlocking panel
6. Reserve panel

Functions

TRS panels are the first generation of Substation Cable Distribution Boards created for the needs of the EDF (the French electricity company) according to the first edition of the HN 63 S 61 (02/79) technical specification.

Conformity to standards

- HN 63 S 61 ed. 02/1979
- IEC 60439

General characteristics

- 4 pole incoming unit with an on-load switch disconnector with visible breaking. The neutral is fitted with an auxiliary earthing contacts.
- 4 or 8 outgoing distributor units by 400 A strip-fuseways. Installation possible with the power on.

References

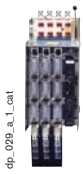

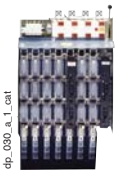

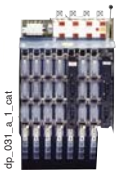

LV public utility boards				TRS 4-800	TRS 8-1 200	TRS 8-1 800
Without fuse switch disconnector for street lighting						
Transformer power	Switch and busbar	Maximum number of outputs	Dimensions W x H x D (mm)	References	References	References
≤ 400 kVA	800 A	4	452 x 1 500 x 430	8051 **0002**		
630 kVA	1 200 A	8	822 x 1 500 x 430		8052 **0002**	
1 000 kVA	1 800 A	8	822 x 1 500 x 430			8053 **0003**
With fuse switch disconnector for street lighting						
≤ 400 kVA	800 A	4	452 x 1 500 x 430	8051 **0032**		
630 kVA	1 200 A	8	822 x 1 500 x 430		8052 **0032**	
1 000 kVA	1 800 A	8	822 x 1 500 x 430			8053 **0032**

Accessories

Monobloc output unit for 3 size 2 fuse links up to 400 A	8060 **0004**	8060 **0004**	8060 **0004**
Fuse holder cover (3 per output)	8056 **0008**	8056 **0008**	8056 **0008**
Reserve panel (awaiting installation of an output)	8056 **0003**	8056 **0003**	8056 **0003**
Locking, short-circuiting and test panel	8056 **0005**	8056 **0005**	8056 **0005**
Insulated handling key for fastening output units with the power on	8056 **0002**	8056 **0002**	8056 **0002**
Size 2 fuse links, distance between centres 115 mm for output units	consult us	consult us	consult us

This document is not a contract. SOCOMEC reserves the right to modify features without prior notice in view of continued improvement. 2008 - 2009

Other products

Specific Substation Cable Distribution Boards

dp_032_a_1_cat

dp_033_a_1_cat

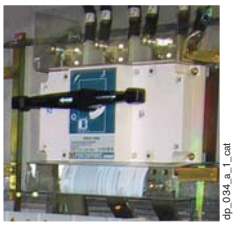
dp_034_a_1_cat

dp_027_a_1_cat - Frédéric ALVADO, Regard 9

As well as standard EDF panels, Socomec also offers specific Substation Cable Distribution Boards such as, for example, those using strip-fuseways in accordance with DIN 43623. Thanks to its long experience in the public power distribution field, Socomec's service as a manufacturer may be of several types:

- **design and construction of complete Substation Cable Distribution Boards** in accordance with specifications specific to an electricity utility,
- **supplying of components** such as main on-load switch disconnectors, measuring and protective devices, fuse links, so that local panels makers can make such public distribution boards. It is this second solution that is most common on the large-scale export market.

Substation Cable Distribution Board

sirco_129_a_1_cat

On-load switch disconnector with fully visualised breaking: SIRCO, see page A.26

The **SIRCO** is very widely used throughout the world as input load break switch for public distribution boards. The excellent visibility of its position indicators and the robustness of its control mechanism make it a very reliable switching device.

Amongst the numerous references, we can mention the new EDF "TIPI" panel which is equipped with **SIRCO** on the input unit (HN 63 s61 e. 03/2002).

sider_080_a_1_cat

On-load switch disconnector with visible breaking: SIDER, see page A.48

The **SIDER**, built according to the same principle as the **SIRCO**, has double visible breaking. It has been used, in particular, for many years in the construction of TRS panels according to the EDF specification (HN 63 S 61 ed. 02/1979).

sdmat_066_a_2_cat

Remote trip load break switch: SIDERMAT, see page A.62

SIDERMAT switches are manually operated switches which can be remotely tripped using a shunt trip release coil or an undervoltage release coil. As well as its function as a general load break switch, it is also possible to add a transformer protection function by means of a relay in the transformer (temperature, oil level, pressure detection), a temperature probe or a DIRIS-type network protection device.

Other components in the LV public distribution networks

On-load switch disconnectors

These can be found in distribution cabinets, but especially in centralized feeder box in block of flats (generally from 125 to 630 A) or as switches top of the meter in private dwellings (less than 125 A).

Examples of applications

sirco_158_b_2_cat

SIRCO,
see page A.26:
- block of flats feeder box,
- distribution cabinet,
- feeder pillar.

sircm_132_a

SIRCO M and MV,
see page A.8:
- fully visualised breaking,
- double break per phase.

This document is not a contract. SOCOMEC reserves the right to modify features without prior notice in view of continued improvement. 2008 - 2009

Other components in the LV public distribution networks

Fuse-protected switchgear

fuser_231_a_2_cat

FUSERBLOC fuse combination switch, see page A.158

- From 2 to “n” poles.
- From 20 to 1250 A.
- Breaking top and bottom of the fuse.
- Front, side, left-hand or right-hand operation.
- Dedicated to all fuse standards: NFC, IEC, DIN, BS88, UL.
- Used in breaking and connection cubicles or to supply column bases.

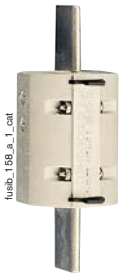
fusib_158_a_1_cat

fusib_159_a_1_cat

HRC fuse links

Protecting LV public distribution cables by fuse has become the obvious choice throughout the world, because this solution offers numerous advantages:
- total reliability, no maintenance and easy discrimination,
- blocking and short-circuiting by removing the fuse,
- easy to add and withdraw with the power on,
- unbeatable cost/performance.

Specific public distribution fuse links (according to EDF specification HN 63 S 20):
- totally insulated size 2 fuse links (polyester body) 125 to 400 A,
- elastic tightening with 115 mm distance between centres or blocked tightening with 160 mm distance between centres.

Other fuse links and fuse holders (see page A.222).

Control and energy management for your electrical networks

diris_561_b_2_cat

DIRIS is a complete range of products and software for control and energy management. The **DIRIS A40** measuring device is designed to facilitate the operation of energy distribution substations by making measurements and energy consumptions available on a display or PC via a serial link. Moreover, the functions of the product can be added by additional modules for monitoring electrical parameters from alarm relays or the analysis of harmonics.

Current transformers and protection devices

trafo_010_a_1_cat

trafo_011_a_2_cat

pti_005_a_2_cat

We offer a **complete range** of wound primary, bar or cable-through current transformers. Each of these solutions can be easily integrated on a plate or DIN rail. To facilitate service work on your installations and more precisely on your measuring chain, we offer a product that allows the protection devices of the CT secondary and thus the effective protection of people and equipment.

Network protection

sgys_002_a_2_cat

sgys_003_b_2_cat

sgys_001_a_2_cat

Several phenomena interfere with the operation of the equipment connected to networks. Overvoltages might be the cause of particularly destructive secondary effects. Apart from overvoltages due to lightning, industrial overvoltages are also a real problem.
The **SURGYS range** of surge arrestors provides effective protection of installations against transient overvoltages of atmospheric and industrial origin.

Measuring kit equipped with Rogowski coils

dp_039_a

Rogowski coils can be manufactured with cross-sections of only a few millimetres, allowing them to be used in installations where space is limited.

To enable more effective monitoring of Substation Cable Distribution Board (SCDB) installations, SOCOMEC offers a kit capable of simultaneously measuring up to three currents (instantaneous and max.) at four feeders. The coil and integrator connection is independent of the frequency, allowing complex or distorted currents to be measured. Following integration, the output signal is used by a **MULTIS L72** measurement device. In contrast to a standard current transformer, the Rogowski coil does not saturate, enabling the same device to measure currents ranging from a few mA to several hundreds of amps.

This document is not a contract. SOCOMEC reserves the right to modify features without prior notice in view of continued improvement. 2008 - 2009

CONTROL AND PROTECTION

Managing energy and protecting persons and equipment or installations

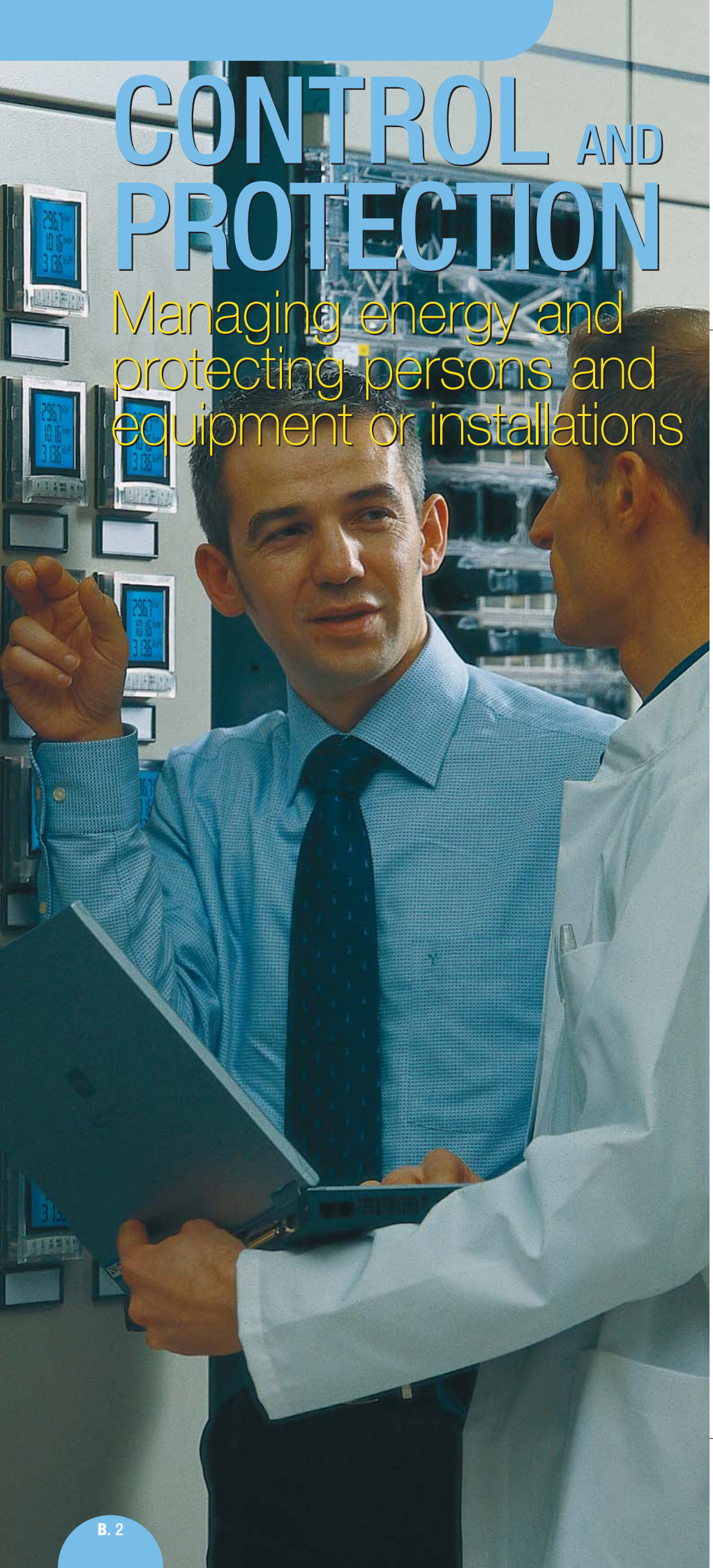

MEASURING, MANAGING, ANALYSING, MONITORING, PROTECTING AND SUPERVISING are the primary functions of the products and software in the Control and Protection field. They combine across the entire electrical installation and in all areas of activity to manage energy and promote long-term development. In addition, they contribute to the continual improvement of the installation's safety level and environment quality, in order to respond to the latest regulations governing the protection of persons and equipment.

In order to measure electrical values and manage your energy, market leader SOCOMEC has designed ranges that incorporate products and systems for:

- measurement using indicators, transducers and current transformers with a range of products that can be adapted upon request,
- active energy metering and impulse centralisation using the COUNTIS® system,
- multi-measurement, network quality analysis and energy management using the DIRIS® system.

To protect electrical networks and equipment from overcurrent, SOCOMEC has designed a complete range of digital protection relays. They may be associated with various breaking devices such as tripping fuse switches.

To ensure the protection of persons and installations, SOCOMEC has designed a complete range of differential relays. These protect the installation in the event of an insulation fault, by tripping a breaking device and signalling a fault current in preventative monitoring mode.

In order to control insulation and locate faults, SOCOMEC has designed the ISOM® system, consisting of a complete range of permanent insulation monitors (PIM) for an islanded or global system, with a special range for medical area applications and fault detectors to facilitate maintenance on all types of installation.

Electrical measurement
[B.4 - B.23]

Energy management
[B.24 - B.69]

Earth leakage relays
[B.70 - B.85]

Network protection
[B.86 - B.87]

CONTROL AND PROTECTION

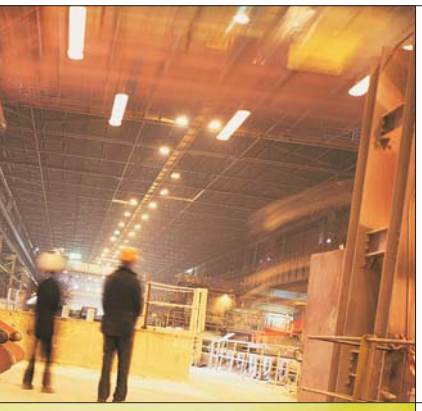

Electrical measurement
MULTIS L72 [B.8]
Even more efficiency with this digital multi-indicator that is particularly easy to install and use.

mult_037_a_1_cat

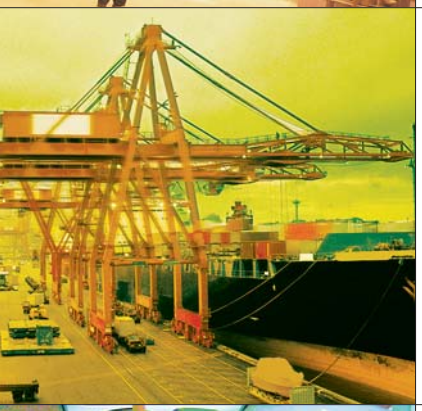

Active energy meter for single phase
COUNTIS AM10 [B.26]
Active energy monitoring of single phase installations with direct connections up to 32 A.
This very compact measuring device makes a difference with its direct kWh reading and with its pulse output.

count_174_a_1_cat

Multi-function meter
DIRIS A40 [B.54]
For multi-measurement, cost management, on-site and remote network monitoring via a communication network.
This multi-function meter stands out through its ease of integration, high accuracy (class 0.5S), user-friendliness (direct access keypad and large backlit LCD display) and enhanced modularity via optional additional plug-in modules.

diris_561_b_1_cat

Earth leakage
RESYS M20, M40 and P40 [B.70]
For protecting persons and property and preventive monitoring of fault currents.
These relays are distinguished by their compactness and their TRMS measurement system.

resys_042_a_1_cat

This document is not a contract. SOCOMEC reserves the right to modify features without prior notice in view of continued improvement. 2008 - 2009

SELECTION GUIDE

ELECTRICAL MEASUREMENT

APPLICATIONS

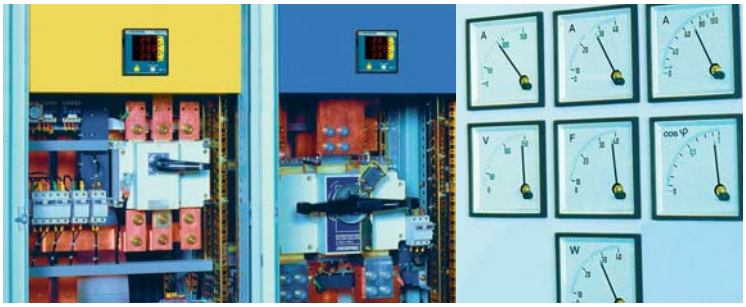

PANEL MOUNTED DEVICES

CHARACTERISTICS

PANEL MOUNTED DEVICES	see page
AC analogue ammeters	Consult us
AC analogue voltmeters	Consult us
Analogue frequency meters	Consult us
Analogue phase meters	Consult us
Analogue watt meters	Consult us
DC analogue ammeters	Consult us
DC analogue voltmeters	Consult us
Digital meters	Consult us
Other products	Consult us
Hours run	Consult us
Changeover switches	Consult us
MULTI-INDICATORS	
MULTIS L72	B.8
MULTIS LMp / LMg	
DIN RAIL DEVICES	
Modular devices	
Measurement transducer	
MEASUREMENT DEVICES	
Measurement shunts	
Current transformer and combined or integrated transducer	
Other products	

This document is not a contract. SOCOMEC reserves the right to modify features without prior notice in view of continued improvement. 2008 - 2009

With its wealth of experience in this area, SOCOMEC offers a wide range of **analogue and digital measuring devices** to meet all needs for displaying, converting, measuring and monitoring of the electrical parameters of a network.

All these devices come in two versions, flush-type for panels or modular for mounting on DIN rails.

PANEL OR DIN RAIL MOUNTED DEVICES

MEASUREMENT DEVICES

see page	see page
Consult us	
Consult us	
Consult us	
Consult us	
Consult us	
Consult us	
B.10	
Consult us	
Consult us	
	Consult us
	B.12
	Consult us

This document is not a contract. SOCOMEC reserves the right to modify features without prior notice in view of continued improvement. 2008 - 2009

Measuring up to all of your needs

Measurement devices

Current transformers

They deliver a standardised current to the secondary proportional to the primary current and adapted to the rating of the associated device.

They are equipped as standard with removable terminal shrouds, double terminals allowing the secondary to be short-circuited with no risk, with two screw-on metal lugs or, in some cases, a clip-on DIN rail mounting.

There are several different types:

- wound primary for low currents high operating powers,
- bar and cable-through, by far the most commonly used due to the wide range,
- split core, thus avoiding any power shutdown whilst making on site modifications,
- modular three-phase CT placed directly after a circuit-breaker, contactor or switch for the measurement of the 3 phases. The primary cables, max. Ø 13 mm, go through the CT rating 3 x 50 / 5 A to 3 x 150 or / 1 A.

PTI

PTI: electronic protection against the opening of secondaries.

This device provides automatic short-circuiting of the CT secondary if the measurement circuit is opened. It is reopened automatically as soon as the measuring circuit is reconnected.

Shunts

Shunts provide indirect measurement of direct current by creating a standardised voltage drop.

They are available in different ratings from 1 to 6000 A for a standard voltage drop of 100 mV.

Two models are available: DIN version or economic version.

Voltage transformers

These devices deliver a standardised voltage to the secondary proportional to the primary voltage in order to adapt the latter to the rating of the associated device.

These standardised ratings are of the type 400/100 V, 380/110 V... or any other standard values. In a resin casing, these devices offer perfect insulation, mechanical strength and safety.

Transducers

They provide conversion of an AC electrical quantity (A, V, Hz, Cos phi, W, Var) into a DC signal, with standardised current or voltage. They are available in surface-mounting casings (CS range).

These devices are designed for DIN rail or back plate mounting.

Type CS transducers in surface-mounted casings come in two dimensions:

- 75 mm for current, voltage and frequency converters,
- 150 mm for power or three-phase converters.

Modular transducers

Available in:

- 3-DIN module housings (52.5 mm) for current, voltage and frequency converters,
- 6-DIN module housings (105 mm) for current (output 4-20 mA), voltage (output 4-20 mA) converters,
- 9-DIN module housings (157.5 mm) for power or three-phase converters.

This document is not a contract. SOCOMEC reserves the right to modify features without prior notice in view of continued improvement. 2008 - 2009

Indicators

Analogue meters

SOCOMEC ferromagnetic ammeters and voltmeters measure the AC current voltage of any electrical circuit. SOCOMEC vibrating reed or needle type frequency meters have a converter either integrated or in a separate casing and measure the frequency of any electrical circuit.

The wattmeters, varmeters and phase-meters consist of an analogue meter and a separate converter. They come in 3 types of casing: Rotex round barrel model in 72 or 96, in a DIN 48 to 144 switch body or a modular casing (3 modules). With pointer deflections of 90° and 240°, they can be flush-mounted into cubicles, enclosures or other equipments.

Changeover switches

Voltmeter and ammeter switches provide the phase changeover for a three-phase circuit for voltage and current measurement.

They are available in three different casings:

- for screw mounting,
- with a central Ø 22 mm mounting,
- for DIN rail mounting.

Digital meters

They measure all types of electrical quantities (A, V, Hz, Cos phi, P, Q...).

The range:

- 2 different types of casing: rectangular or square:
  - 2 sizes of rectangular casing,
  - 2 sizes of square casing.
- direct measurement indicators or connected to a current or voltage transformer,
- 2000-point (3.5 digits) or 20000-point (4.5 digits) display,
- possibility of having 2 or 3 different types of measurement in the same square casing (AAA-VVV-AVF...),
- multi-indicators version,
- RMS-value.

Hours run

Often combined with analogue meters in an electrical panel, hours run provide the total operating time of machines or electrical equipment.

This document is not a contract. SOCOMEC reserves the right to modify features without prior notice in view of continued improvement. 2008 - 2009

MULTIS L72

MULTIS L72

1. 3-line LED display 4 digits 7 segments.
2. Selection of measurements (U, V, I and I_0, f and h).
3. Selection of the type of value required (instant, average or max.)
4. Zero reset for max. values.
5. LEDs indicating type of value:
   - OFF = instantaneous,
   - AVG ON = average,
   - MAX ON = maximum.
6. Measured values indicator LED.

Functions

The **MULTIS L72** is a digital LV three-phase measurement device.
It displays simultaneously on the 3 phases the most frequent values for an electrical installation or for monitoring generator sets.

Conformity to standards

- IEC 61000-4-2
- IEC 61000-4-3
- IEC 61000-4-4
- IEC 61000-4-5
- IEC 61000-4-6
- IEC 61000-4-8
- IEC 61000-4-11
- EN 55022 class B

General features

Display		MULTIS L72
Instantaneous values	U + V + I + I_0 + F	•
Average values	U + V + I	•
Max values	U + I + I_0	•
Hours run		•

This product is configurable (CT ratio, type of network and max current, integration period).

Reference

Function	MULTIS L72 Reference
Instantaneous values, average and maximum	192J **8100**

This document is not a contract. SOCOMEC reserves the right to modify features without prior notice in view of continued improvement. 2008 - 2009

Electrical characteristics

Current measurement (TRMS)

Type	non insulated
CT primary	5 … 8000 A
CT Secondary	5 A
Input consumption	≤ 0.5 VA
Sustained overload	1.2 I_n
Intermittent overload	10 I_n / 1s

Voltage measurements (TRMS)

Measurement range	35 … 480 VAC
Input consumption	≤ 0.5 VA
Sustained overload	1.2 U_n
Insulation voltage	2.5 kV

Frequency measurement

Measurement range	40 … 80 Hz

Accuracy

Voltage - current	0.5 % ± 1 Digit (45 … 65 Hz)
Frequency	± 0.2 Hz

Hours run

Max. value	999 999.9 h
Resolution	0.1 h

Power supply

Auxiliary power supply	230 / 400 VAC
Tolerance	± 20 %

Operating conditions

Operating temperature	-15 … +50 °C
Storage temperature	-20 … +70 °C
Relative humidity	95 %

Overall dimensions

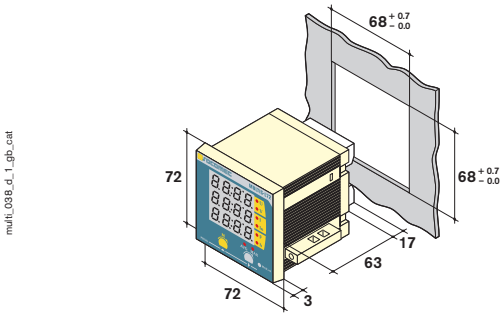

Type	panel mounting
Dimensions W x H x D	72 x 72 x 83 mm
Case protection rating	IP20
Front protection rating	IP54
Display type	led 7 segments
Terminal block type	disconnectable
Rigid cable connection section	≤ 2.5 mm²
Flexible cable connection section	≤ 2.5 mm²
Weight	250 g

Terminals

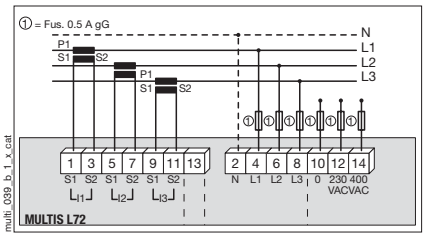

1 and 3: current input phase 1
5 and 7: current input phase 2
9 and 11: current input phase 3
13: not used

2 - 4 - 6 - 8: network voltage inputs
10: power supply or self-supplied
10 - 12: power supply or self-supplied 230 VAC
10 - 14: power supply or self-supplied 400 VAC

Do not connect the CT secondary to the earth

Connections

▶ *Self-supplied*

• Single phase 230 VAC

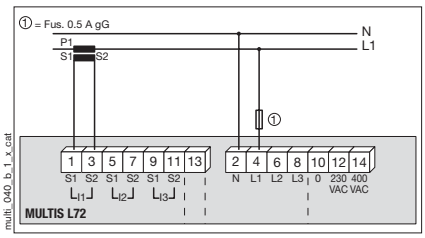

• Three-phase 230 / 400 VAC

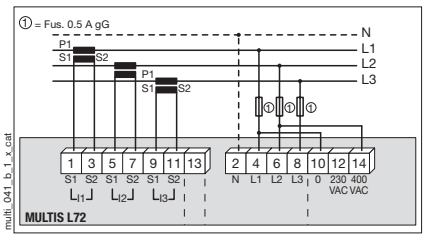

• Three-phase 135 / 230 VAC

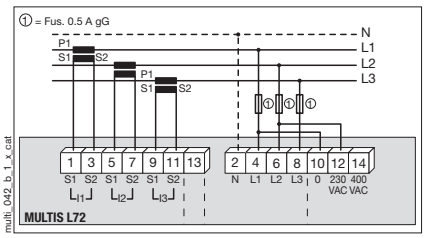

This document is not a contract. SOCOMEC reserves the right to modify features without prior notice in view of continued improvement. 2008 - 2009

MULTIS LMp
MULTIS LMg

multi_024_b_3_x_cat

MULTIS LMp

1. 3-line LED display 4 digits 7 segments.
2. Measured values indicator LED.
3. Selection of measurements (U, V, I and I_0).
4. Selection of the type of value required (average, instant).
5. LEDs indicating type of value:
   - OFF = instantaneous,
   - AVG ON = average.

multi_025_b_2_x_cat

MULTIS LMg

1. 3-line LED display 4 digits 7 segments.
2. Measured values indicator LED.
3. Selection of measurements (U, V, I and I_0, f and h).
4. Selection of the type of value required (average, instant or max.).
5. Zero reset for max. values.
6. LEDs indicating type of value:
   - OFF = instantaneous,
   - AVG ON = average,
   - MAX ON = maximum.

Functions

The **MULTIS LM** is a digital LV three-phase measuring device.
It displays simultaneously on the 3 phases the most frequent values for an electrical installation or for monitoring generator sets.

Conformity to standards

- IEC 61000-4-2
- IEC 61000-4-3
- IEC 61000-4-4
- IEC 61000-4-5
- IEC 61000-4-6
- IEC 61000-4-8
- IEC 61000-4-11
- EN 55022 class B

General features

Display		MULTIS LMp	MULTIS LMg
Instantaneous values	$U + V + I + I_0$	•	•
	$U + V + I + I_0 + f + h$		•
Average values	$U + V + I$	•	•
Max values	$U + I + I_0$		•

These products are configurable (CT ratio, type of network and maximum current, integration period for LMg).

References

Function	MULTIS LMp References	MULTIS LMg References
Instantaneous and average values	192J **8020**	
Instantaneous values, average and maximum		192J **8030**

Accessory

Panel mounting kit	192J **8015**	192J **8015**

This document is not a contract. SOCOMEC reserves the right to modify features without prior notice in view of continued improvement. 2008 - 2009

Electrical characteristics

Current measurements (TRMS)

Type	non insulated
CT primary	5 … 8000 A
CT Secondary	5 A
Input consumption	≤ 0.5 VA
Sustained overload	1.2 In
Intermittent overload	10 In during 1s

Voltage measurement (TRMS)

Measurement range	35 … 480 VAC
Input consumption	≤ 0.5 VA
Sustained overload	1.2 Un
Insulation voltage	4 kV

Frequency measurement

Measurement range(1)	40 … 80 Hz

Accuracy

Voltage - current	0.5 % ± 1 Digit (45 … 65 Hz)
Frequency	± 0.2 Hz

Hours run

Max. value(1)	999 999.9 h
Resolution(1)	0.1 h

Power supply

Self-supply	yes
Auxiliary power supply	230 / 400 VAC
Tolerance	± 20 %

Operating conditions

Operating temperature	-15 … +50 °C
Storage temperature	-20 … +70 °C
Relative humidity	95 %

(1) MULTIS LMg.

Overall dimensions

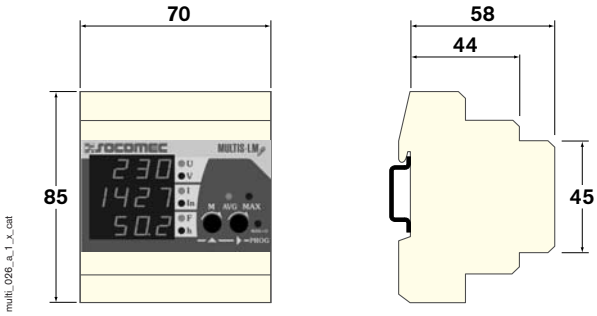

Type	modular
Number of modules	4
Dimensions W x H x D	70 x 85 x 58 mm
Case protection rating	IP20
Front protection rating	IP30
Display type	led 7 segments
Terminal block type	fixed
Rigid cable connection section	1.5 … 10 mm²
Flexible cable connection section	1 … 6 mm²
Weight	300 g

Terminals

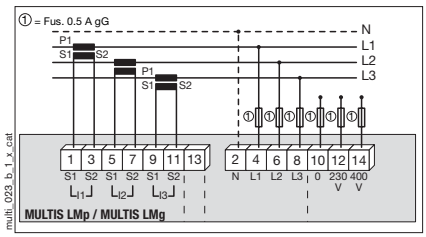

1 and 3: current input phase 1
5 and 7: current input phase 2
9 and 11: current input phase 3
13: not used

2 - 4 - 6 - 8: network voltage inputs
10: power supply or self-supplied
12: power supply or self-supplied 230 VAC
14: power supply or self-supplied 400 VAC

Do not connect the CT secondary to the earth

Connections

▶ *Self-supplied*

• Single-phase 230 VAC

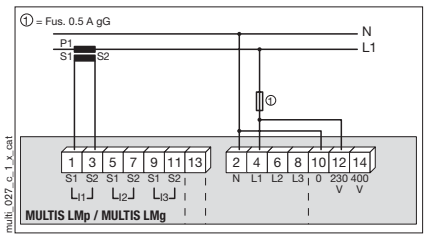

• Three-phase 230 / 400 VAC

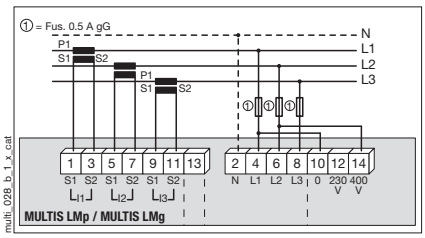

• Three-phase 135 / 230 VAC

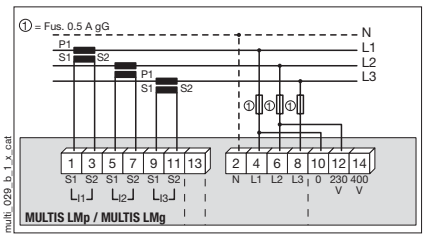

This document is not a contract. SOCOMEC reserves the right to modify features without prior notice in view of continued improvement. 2008 - 2009

Current transformers

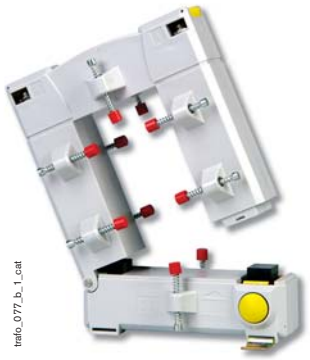
trafo_077_b_1_cat

trafo_011_a_1_cat

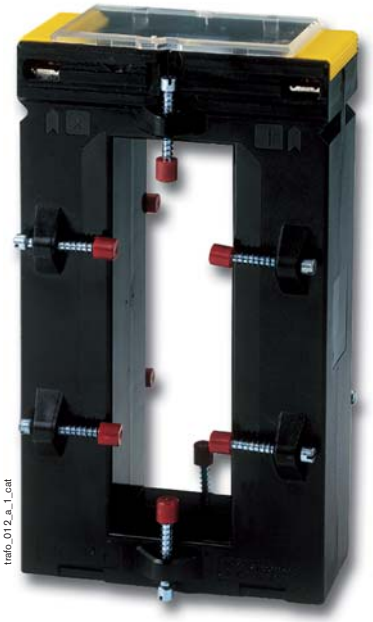
trafo_012_a_1_cat

trafo_010_a_1_cat

trafo_008_a_1_cat

Functions

SOCOMEC **current transformers** deliver to the secondary a standard current proportional to the primary current and adapted to the rating of the associated device. They are equipped as standard with removable terminal covers, double terminals allowing the secondary to be short-circuited without any risk.

They are mounted using two screw-on metal brackets or, in certain cases, by a clip-on DIN rail fastening. The connections are made by screws or by fast-on terminals.

- Accuracy class: 0.5.
- Accuracy class: 1 or 3 for higher required powers.
- Dielectric quality: 3 kV - 50 Hz - 1 mn.
- Operating frequency: 50 - 60 Hz.
- Permanent overload: 1.2 I_n.

Conformity to standards

- IEC 185 (IEC 44-1)
- VDE 0414

Abbreviated description

- **Primary wound moulder case transformer: TRB xxx** (xxx = CT width).
- **Cable-through transformer: TCA xx** (xx = cable diameter).
- **Bar or cable-through transformer: TCB xx-yy** (xx = cable diameter, yy = bar width).
- **Bar-through transformer: TBA yy** (yy = bar width).
- **Sectioned split-core transformer: TO xx-yy** (xx = inside width, yy = inside height).

Other products available

- Accuracy class: 0.2 S.
- 1 A secondary.
- Frequency 400 Hz.
- Double or triple primary ratio.
- Summation.
- Voltage transformer.

The range

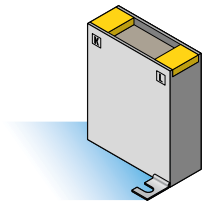
trafo_013_a_1_x_cat

Coiled primary
- Low primary current.
- Wide power range available.
- Primary and secondary connection on CT.

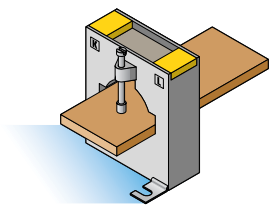
trafo_014_a_1_x_cat

Bar or cable-through
- Multiple applications per:
  - cables: Ø 17 to Ø 100 mm,
  - bars: 20 x 5 mm to 2 x 125 x 10 mm.

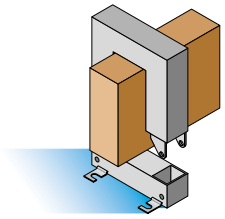
trafo_015_a_1_x_cat

Sectioned split-core transformer
- Avoid power supply disconnections.
- Modify an installation.
- Wide range of openings: 20 x 30 to 160 x 80 mm.

This document is not a contract. SOCOMEC reserves the right to modify features without prior notice in view of continued improvement. 2008 - 2009

References

▶ *Primary wound moulded case CT*

Primary	CT Secondary	TRB 60 References	TRB 70 References	TRB 135 References
5 A	5 A	192T **0505**	192T **0521**	
10 A	5 A	192T **0510**	192T **0522**	
15 A	5 A	192T **0515**	192T **0523**	
20 A	5 A	192T **0520**	192T **0524**	
25 A	5 A		192T **0525**	192T **0603**
30 A	5 A		192T **0530**	192T **0607**
40 A	5 A		192T **0540**	192T **0604**
50 A	5 A			192T **0605**
60 A	5 A			192T **0606**
75 A	5 A			192T **0608**
100 A	5 A			192T **0610**
125 A	5 A			192T **0612**
150 A	5 A			192T **0615**
160 A	5 A			
200 A	5 A			
250 A	5 A			
300 A	5 A			
400 A	5 A			
500 A	5 A			
600 A	5 A			

▶ *Cable-through CT*

TCA 21 References	TCA 22 References
192T **2005**	
192T **2006**	
192T **2007**	
192T **2010**	192T **2022**
192T **2012**	192T **2026**
192T **2015**	192T **2023**
192T **2060**	
192T **2020**	192T **2024**
192T **2016**	192T **2025**
192T **2017**	192T **2030**
	192T **2034**
	192T **2035**
	192T **2036**

Accessories

	TRB 60	TRB 70	TRB 135	TCA 21	TCA 22
DIN rail mounting	192T **0002**	192T **0005**		192T **0006**	192T **0007**
Sealed cover	192T **0105**	192T **0103**	192T **0101**	no	no

• **Plug-in transducer**

Power supply	Output	CEA-VA for TRB 60 References	CEA-VA for TRB 70 References
Self supplied	0-20 mA / 0-10 VDC	192Y **0015**	192Y **0025**
230 VAC	0-20 mA / 0-10 VDC	192Y **0215**	192Y **0225**
24 VDC	0-20 mA / 0-10 VDC	192Y **0115**	192Y **0125**

Power supply	Output	CEA-VA4 for TRB 60 References	CEA-VA4 for TRB 70 References
230 VAC	4-20 mA / 0-10 VDC	192Y **0255**	192Y **0265**
24 VDC	4-20 mA / 0-10 VDC	192Y **0155**	192Y **0165**

This document is not a contract. SOCOMEC reserves the right to modify features without prior notice in view of continued improvement. 2008 - 2009

Current transformers

References

▶ *Bar or cable-through CT*

TCB 17-20

TCB 26-30

TCB 28-30

TCB 26-40

TCB 32-40

Primary	CT Secondary	References	References	References	References	References
50 A	5 A		192T **2305**	192T **2405**		192T **4005**
60 A	5 A	192T **2106**	192T **2306**	192T **2406**		192T **4006**
75 A	5 A	192T **2107**	192T **2307**	192T **2407**		192T **4007**
100 A	5 A	192T **2110**	192T **2310**	192T **2410**	192T **3210**	192T **4010**
125 A	5 A	192T **2112**	192T **2312**	192T **2412**	192T **3212**	192T **4012**
150 A	5 A	192T **2115**	192T **2315**	192T **2415**	192T **3215**	192T **4015**
160 A	5 A	192T **2116**			192T **3216**	
200 A	5 A	192T **2120**	192T **2320**	192T **2420**	192T **3220**	192T **4020**
250 A	5 A	192T **2125**	192T **2325**	192T **2425**	192T **3225**	192T **4025**
300 A	5 A	192T **2130**	192T **2330**	192T **2430**	192T **3230**	192T **4030**
400 A	5 A	192T **2140**	192T **2340**	192T **2440**	192T **3240**	192T **4040**
500 A	5 A		192T **2350**	192T **2450**	192T **3250**	192T **4050**
600 A	5 A		192T **2360**	192T **2460**	192T **3260**	192T **4060**
750 A	5 A		192T **2375**		192T **3275**	192T **4075**
800 A	5 A				192T **3280**	192T **4080**
1000 A	5 A					192T **4090**

Accessoires

DIN rail mounting	192T **0007**	192T **0003**	no	192T **0002**	192T **0005**
Sealed cover	no	192T **0105**	no	192T **0105**	192T **0103**

• Plug-in transducer

Power supply	Output	CEA-VA for TCB 26-30 References	CEA-VA for TCB 26-40 References	CEA-VA for TCB 32-40 References
Self supplied	0-20 mA / 0-10 VDC	192Y **0015**	192Y **0015**	192Y **0035**
230 VAC	0-20 mA / 0-10 VDC	192Y **0215**	192Y **0215**	192Y **0235**
24 VDC	0-20 mA / 0-10 VDC	192Y **0115**	192Y **0115**	192Y **0135**

Power supply	Output	CEA-VA4 for TCB 26-30 References	CEA-VA4 for TCB 26-40 References	CEA-VA4 for TCB 32-40 References
230 VAC	4-20 mA / 0-10 VDC	192Y **0255**	192Y **0255**	192Y **0275**
24 VDC	4-20 mA / 0-10 VDC	192Y **0155**	192Y **0155**	192Y **0175**

This document is not a contract. SOCOMEC reserves the right to modify features without prior notice in view of continued improvement. 2008 - 2009

References

▶ *Bar or cable-through CT*

Primary	CT Secondary	TCB 44-50 References	TCB 44-63 References	TCB 55-80 References	TCB 85-100 References	TCB 100-125 References
100 A	5 A	192T **5010**				
150 A	5 A	192T **5015**				
200 A	5 A	192T **5020**	192T **6420**			
250 A	5 A	192T **5025**	192T **6425**			
300 A	5 A	192T **5030**	192T **6430**			
400 A	5 A	192T **5040**	192T **6440**	192T **8140**		
500 A	5 A	192T **5050**	192T **6450**	192T **8150**		
600 A	5 A	192T **5060**	192T **6460**	192T **8160**		
750 A	5 A	192T **5075**	192T **6475**	192T **8175**	192T **9675**	
800 A	5 A	192T **5080**	192T **6480**	192T **8180**	192T **9680**	
1000 A	5 A	192T **5090**	192T **6490**	192T **8190**	192T **9690**	192T **9590**
1200 A	5 A	192T **5092**	192T **6492**	192T **8192**	192T **9692**	192T **9592**
1250 A	5 A	192T **5095**	192T **6493**	192T **8193**	192T **9693**	192T **9593**
1500 A	5 A		192T **6495**	192T **8195**	192T **9695**	192T **9595**
1600 A	5 A		192T **6494**	192T **8194**	192T **9694**	
2000 A	5 A			192T **8196**	192T **9696**	192T **9596**
2500 A	5 A				192T **9697**	192T **9597**
3000 A	5 A				192T **9698**	192T **9598**
4000 A	5 A					192T **9599**

Accessories

Sealed cover		192T **0102**	192T **0102**	192T **0102**	192T **0106**	192T **0106**

• **Plug-in transducer**

Power supply	Output	CEA-VA for TCB 44-63 References	CEA-VA for TCB 55-80 References
Autoalimenté	0-20 mA / 0-10 VDC	192Y **0045**	192Y **0045**
230 VAC	0-20 mA / 0-10 VDC	192Y **0245**	192Y **0245**
24 VDC	0-20 mA / 0-10 VDC	192Y **0145**	192Y **0145**

Power supply	Output	CEA-VA4 for TCB 44-63 References	CEA-VA4 for TCB 55-80 References
230 VAC	4-20 mA / 0-10 VDC	192Y **0285**	192Y **0285**
24 VDC	4-20 mA / 0-10 VDC	192Y **0185**	192Y **0185**

This document is not a contract. SOCOMEC reserves the right to modify features without prior notice in view of continued improvement. 2008 - 2009

Current transformers

References

Bar-through CT

Primary	CT Secondary	TBA 60 References	TBA 100 References	TBA 103 References	TBA 127 References
200 A	5 A	192T **7020**			
250 A	5 A	192T **7025**			
300 A	5 A	192T **7030**			
400 A	5 A	192T **7040**		192T **9340**	192T **9740**
500 A	5 A	192T **7050**		192T **9350**	192T **9750**
600 A	5 A	192T **7060**	192T **8060**	192T **9360**	192T **9760**
750 A	5 A	192T **7075**	192T **8075**	192T **9375**	192T **9775**
800 A	5 A	192T **7080**	192T **8080**	192T **9380**	192T **9780**
1000 A	5 A	192T **7090**	192T **8090**	192T **9390**	192T **9790**
1200 A	5 A	192T **7092**	192T **8092**	192T **9392**	192T **9792**
1250 A	5 A	192T **7093**	192T **8093**	192T **9393**	192T **9793**
1500 A	5 A	192T **7095**	192T **8095**	192T **9395**	192T **9795**
1600 A	5 A	192T **7094**	192T **8094**	192T **9394**	192T **9794**
2000 A	5 A	192T **7096**	192T **8096**	192T **9396**	192T **9796**
2500 A	5 A		192T **8097**		192T **9797**
3000 A	5 A		192T **8098**		182T **9798**(2)
4000 A	5 A		192T **8099**(1)		182T **9799**(2)

(1) The dimensions are different for model TBA 100 to 4000 A primary.
(2) Replacement model TRA 127 for this rating.

Accessories

Sealed cover		192T **0102**	192T **0102**	192T **0102**	192T **0102**

Summation CT

Primary	CT Secondary	BSA 02 Reference	BSA 03 Reference	BSA 04 Reference
5 + 5 / 5 A	5 A	192T **0802**		
5 + 5 + 5 / 5 A	5 A		192T **0803**	
5 + 5 + 5 + 5 / 5 A	5 A			192T **0904**

This document is not a contract. SOCOMEC reserves the right to modify features without prior notice in view of continued improvement. 2008 - 2009

References

Three-phase CT DIN rail mounted

trafo_008_a_2_cat

TCA 13 - 3P

Primary	Secondary[1]	Operating frequency	VA	Class	Max. operating voltage	Number of modules	References
3 x 50 A	5 A	50 - 60 Hz	1	1	720 VAC	6	192T **1905**
3 x 60 A	5 A	50 - 60 Hz	1.25	1	720 VAC	6	192T **1906**
3 x 75 A	5 A	50 - 60 Hz	1.5	1	720 VAC	6	192T **1907**
3 x 80 A	5 A	50 - 60 Hz	1.5	1	720 VAC	6	192T **1908**
3 x 100 A	5 A	50 - 60 Hz	2.5	0.5	720 VAC	6	192T **1910**
3 x 125 A	5 A	50 - 60 Hz	2.5	0.5	720 VAC	6	192T **1912**
3 x 150 A	5 A	50 - 60 Hz	25	0.5	720 VAC	6	192T **1915**
3 x 160 A	5 A	50 - 60 Hz	1.5	0.5	720 VAC	6	192T **1916**

(1) 1 A secondary: on request.

Split core CT

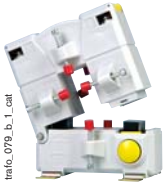

trafo_079_b_1_cat

TO 23

trafo_077_b_2_cat

TO 58

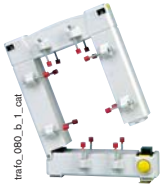

trafo_080_b_1_cat

TO 812

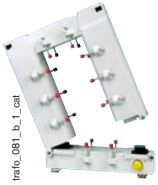

trafo_081_b_1_cat

TO 816

Primary	CT Secondary	TO 23 References	TO 58 References	TO 812 References	TO 816 References
100 A	5 A	192T **4601**			
150 A	5 A	192T **4602**			
200 A	5 A	192T **4603**			
250 A	5 A	192T **4604**	192T **4625**	192T **4725**	
300 A	5 A	192T **4605**	192T **4630**	192T **4730**	
400 A	5 A	192T **4606**	192T **4640**	192T **4740**	
500 A	5 A		192T **4650**	192T **4750**	
600 A	5 A		192T **4660**	192T **4760**	
750 A	5 A		192T **4675**	192T **4775**	
800 A	5 A		192T **4680**	192T **4780**	
1000 A	5 A		192T **4610**	192T **4710**	192T **4810**
1250 A	5 A			192T **4712**	192T **4812**
1500 A	5 A			192T **4715**	192T **4815**
2000 A	5 A				192T **4820**
2500 A	5 A				192T **4825**
3000 A	5 A				192T **4830**
4000 A	5 A				192T **4840**
5000 A	5 A				192T **4850**

This document is not a contract. SOCOMEC reserves the right to modify features without prior notice in view of continued improvement. 2008 - 2009

Current transformers

Electrical characteristics

Primary wound moulded case CT

	TRB 60			TRB 70			TRB 135		
	Class			Class			Class		
	0.5	1	3	0.5	1	3	0.5	1	3
Primary	VA			VA			VA		
5 A	2.5	5	7.5	10	15	20			
10 A	2.5	5	7.5	10	15	20			
15 A	2.5	5	7.5	10	15	20			
20 A	2.5	5	7.5	10	15	20			
25 A				10	15	20	10	15	30
30 A				5	10	20	10	15	30
40 A				5	10	20	10	15	30
50 A							10	15	30
60 A							10	15	30
75 A							10	15	30
100 A							10	15	30
125 A									
150 A									
160 A									
200 A									
250 A									
300 A									
400 A									
500 A									
600 A									
Converter (type)	1			2					
DIN rail mounted	yes			yes					
Ø cable (mm)									
HxWxD (mm)	78.5x61x35			88.5x71x45			85x135x60		

Cable-through CT

	TCA 21			TCA 22		
	Class			Class		
	0.5	1	3	0.5	1	3
Primary	VA			VA		
5 A						
10 A						
15 A						
20 A						
25 A						
30 A						
40 A						
50 A		1	2			
60 A		1.2	2.5			
75 A		1.5	3			
100 A	1.5	2.5	5		1	2
125 A	2.5	3.7	7.5		1	3
150 A	2.5	3.7	7.5		1.5	3
160 A	1.5	2.5	3.75			
200 A	2.5	5	10		2.5	5
250 A	5	7.5	15		5	10
300 A	5	7.5	15		5	10
400 A					10	20
500 A					10	20
600 A					10	20
Converter (type)						
DIN rail mounted	yes			yes		
Ø cable (mm)	21			22.5		
HxWxD (mm)	65x45x30			65x49.5x35		

Bar or cable-through CT

	TCB 17-20			TCB 26-30			TCB 28-30			TCB 26-40			TCB 32-40			TCB 44-50			TCB 44-63		
	Class			Class			Class			Class			Class			Class			Class		
	0.5	1	3	0.5	1	3	0.5	1	3	0.5	1	3	0.5	1	3	0.5	1	3	0.5	1	3
Primary	VA			VA			VA			VA			VA			VA			VA		
50 A					1	2	1	1.5	2					1.5	3						
60 A		1	2		1	2	1.25	2	3					1.5	3						
75 A		1	2		1.5	3	2.5	3.7	5					2.5	5						
100 A		1.5	3	1.5	2.5	5	2.5	3.7	5		1.5	3	2.5	3.7	7.5		1.5	3			
125 A		1.5	3	1.5	2.5	5	5	7.5	10		2.5	4	2.5	3.7	7.5						
150 A		2.5	5	1.5	2.5	5	5	7.5	10		2.5	5	2.5	5	10	2.5	5	10			
160 A		2.5	3.75							1.5	2.5	3.75							15	30	45
200 A		2.5	5	2.5	5	10	5	10	15		2.5	5	5	10	15	5	10	15			
250 A		5	7.5	5	10	15	5	10	15		5	10	5	10	20	5	10	15	1.5	2.5	5
300 A		5	10	5	10	15	5	10	15		5	10	10	15	30	10	15	30	1.5	2.5	5
400 A		10	15	5	10	15	10	15	20		5	10	10	15	30	10	15	30	2.5	5	10
500 A				5	10	15	10	15	20		10	20	10	15	30	10	15	30	5	10	20
600 A				5	10	15	10	15	20		10	20	10	15	30	10	15	30	10	15	30
750 A											15	30	10	15	30	15	30	45	10	15	30
800 A											15	30	15	30	45	15	30	45	10	15	30
1000 A													15	30	45	15	30	45	10	15	30
1200 A																15	30	45	15	30	45
1250 A																			15	30	45
1500 A																			15	30	45
Converter (type)					1						1			2						3	
DIN rail mounted		yes			yes						yes			yes							
Bar (mm)		20x5			30x10			30x10			40x10			40x10			50x12			63x10	
Ø cable (mm)		17.5			26			28			26			32			44			44	
HxWxD (mm)		65x49.5x50			78.5x61x48			70x49.9x68			78.5x61x48			88.5x71x58			101.5x86x58			108.5x96x58	

This document is not a contract. SOCOMEC reserves the right to modify features without prior notice in view of continued improvement. 2008 - 2009

Electrical characteristics

Bar or cable-through CT

	TCB 55-80			TCB 85-100			TCB 100-125		
	Class			Class			Class		
	0.5	1	3	0.5	1	3	0.5	1	3
Primary	VA			VA			VA		
200 A									
250 A									
300 A									
400 A	2.5	5	10						
500 A	5	10	20						
600 A	5	10	20						
750 A	10	15	30	2.5	5	10			
800 A	10	20	30	5	10	20			
1000 A	15	30	45	10	15	30	5	10	20
1200 A	15	30	45	10	15	30	10	15	30
1250 A	15	30	45	15	30	45	10	15	30
1500 A	15	30	45	15	30	45	15	30	45
1600 A	15	30	45	15	30	60			
2000 A	15	30	45	30	45	60	30	45	60
2500 A				30	45	60	30	45	60
3000 A				30	45	60	30	45	60
4000 A							30	45	60
Converter (type)	3								
Bar (mm)	80x10			2x100x10			2x120x10		
HxWxD (mm	126.5x120x58			187.5x172x52			187.5x172x52		

Bar-through CT

	TBA 60			TBA 100			TBA 103			TBA 127		
	Class			Class			Class			Class		
	0.5	1	3	0.5	1	3	0.5	1	3	0.5	1	3
Primary	VA			VA			VA			VA		
200 A		2.5	5									
250 A	1.5	2.5	5									
300 A	2.5	5	10									
400 A	5	10	20				2.5	5	10	2.5	5	7.5
500 A	5	10	20				2.5	5	10	2.5	5	7.5
600 A	10	15	30	5	10	20	2.5	5	10	2.5	5	10
750 A	10	15	30	5	10	20	2.5	5	10	2.5	5	10
800 A	10	15	30	5	10	20	5	10	15	5	10	15
1000 A	15	30	45	5	10	20	10	15	20	10	15	20
1200 A	15	30	45	10	15	30	10	15	20	10	15	20
1250 A	15	30	45	10	15	30	10	15	20	10	15	20
1500 A	15	30	45	15	30	45	10	15	20	15	30	45
1600 A	15	30	45	15	30	45	10	15	30	15	25	45
2000 A	15	30	45	15	30	45	10	15	20	15	30	45
2500 A				30	45	60				15	30	45
3000 A				30	45	60				15	30	45
4000 A				30	45	60						
Converter (type)												
Bar (mm)	60x30			100x30			100x35			125x35		
HxWxD (mm	132x88x78			170x129x78 (1)			150x99x55			175x100x55		

(1) TBA 100 to 4000 A primary: 217x129x78mm.

Summation CT

Please consult us.

Three-phase CT DIN rail mounted

Please consult us.

Split core CT

	TO 23			TO 58			TO 812			TO 816		
	Class			Class			Class			Class		
	0.5	1	3	0.5	1	3	0.5	1	3	0.5	1	3
Primary	VA			VA			VA			VA		
100 A		1.25	1.5									
150 A		1.5	2.5									
200 A		1.5	2.5									
250 A		1.5	2.5	1	2	4	1	2	4			
300 A	1.5	4	6	1.5	3	6	1.5	3	6			
400 A	2.5	6	10	1.5	3	10	1.5	3	6			
500 A				2.5	5	15	2.5	5	10			
600 A				2.5	5	15	2.5	5	10			
750 A				2.5	5	15	2.5	5	10			
800 A				2.5	5	15	2.5	5	10			
1000 A				5	10	20	5	10	20	10	15	20
1250 A							7.5	15	25	10	15	20
1500 A							7.5	15	25	10	15	20
2000 A										10	15	20
2500 A										10	15	20
3000 A										15	25	35
4000 A										15	25	35
5000 A										15	25	35
HxWxD (mm)	106 x 93 x 58			152 x 125 x 58			198 x 155 x 58			246 x 195 x 79		

This document is not a contract. SOCOMEC reserves the right to modify features without prior notice in view of continued improvement. 2008 - 2009

Current transformers

Dimensions

▶ *Primary wound moulded case CT*

• **TRB 60**

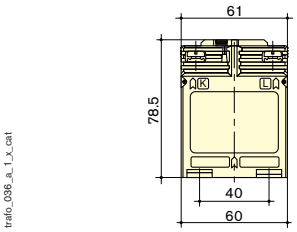

• **TRB 70**

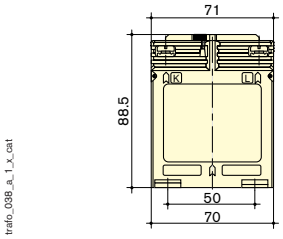

• **TRB 135**

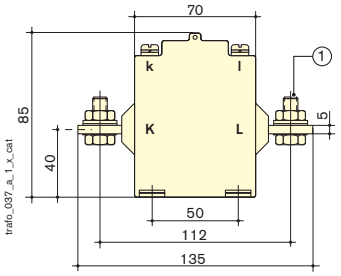

1. 25 to 100 A: M8x25
   125 to 150 A: M10x30

▶ *Cable-through CT*

• **TCA 21**

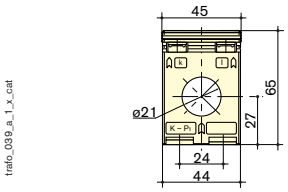

• **TCA 22**

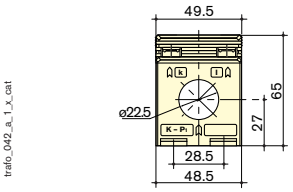

▶ *Bar or cable-through CT*

• **TCB 17-20**

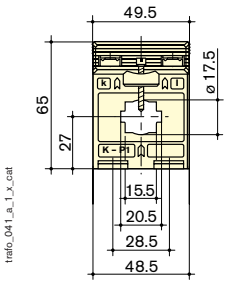

• **TCB 26-30**

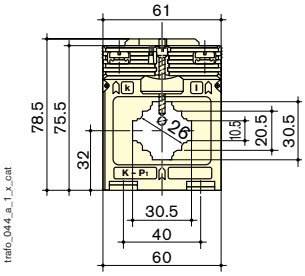

• **TCB 28-30**

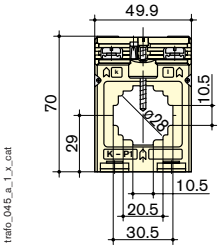

• **TCB 26-40**

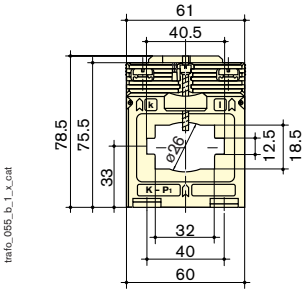

• **TCB 32-40**

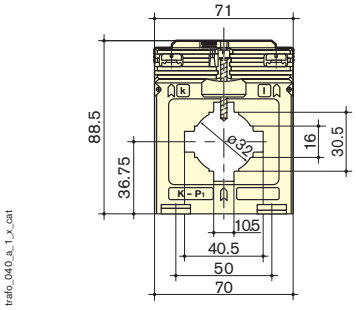

• **TCB 44-50**

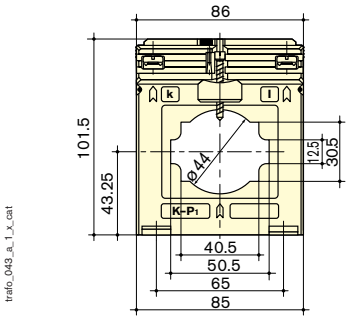

• **TCB 44-63**

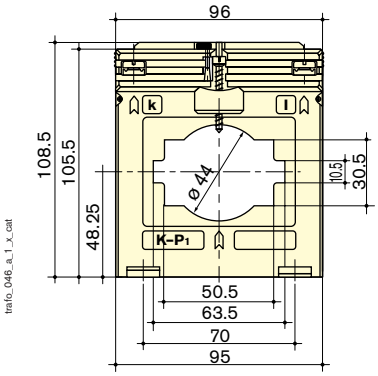

This document is not a contract. SOCOMEC reserves the right to modify features without prior notice in view of continued improvement. 2008 - 2009

Dimensions

Bar or cable-through CT

• **TCB 55-80**

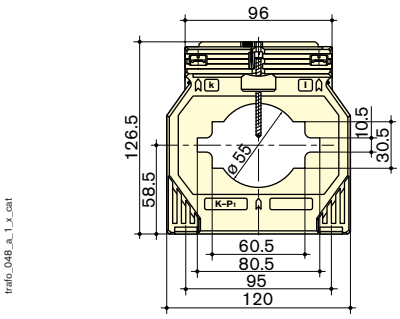

• **TCB 85-100**

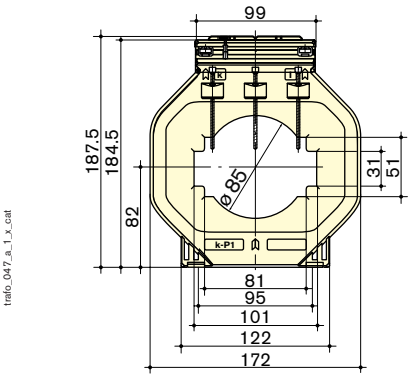

• **TCB 100-125**

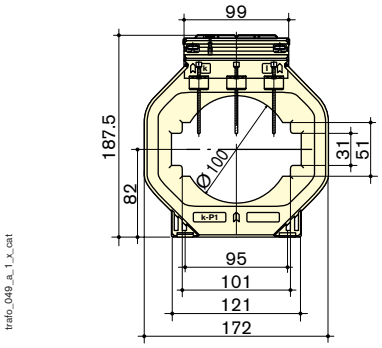

Bar-through CT

• **TBA 60**

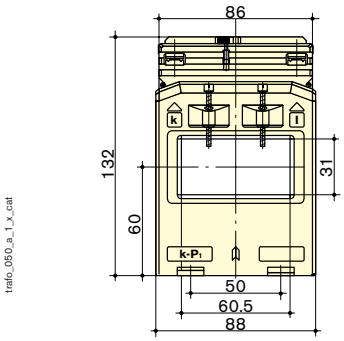

• **TBA 100** - 600 to 3000 A

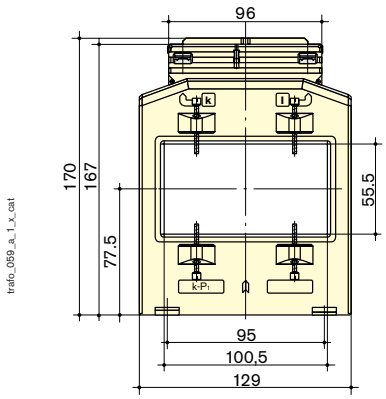

• **TBA 100** - 4000 A

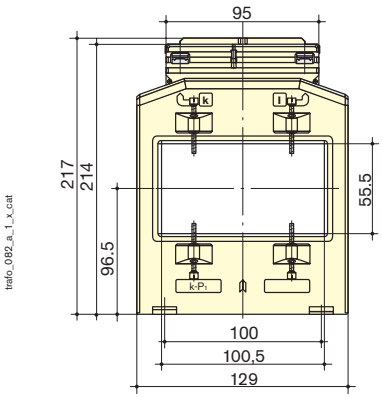

• **TBA 103**

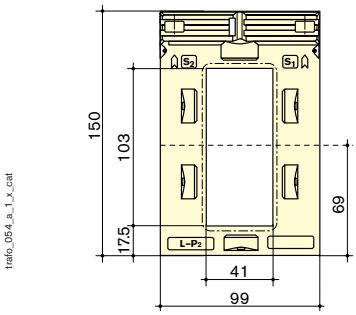

• **TBA 127**

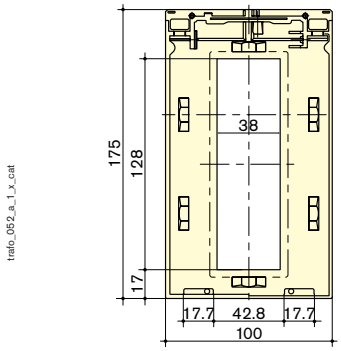

This document is not a contract. SOCOMEC reserves the right to modify features without prior notice in view of continued improvement. 2008 - 2009

Current transformers

Dimensions

Plug-in transducer

Transducer to be associated with adapted current transformers:
- input: 1 or 5 A.
- output:
  - 0-20 mA, 0-10 V (type CEA-VA),
  - 4-20 mA, 0-10 V (type CEA-VA4).
- self-supplied or auxiliary power supply 24 VDC or 230 VAC.
- 3 sizes according to the CT: type 1, 2 or 3.

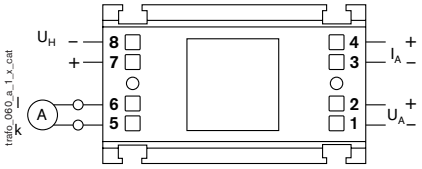

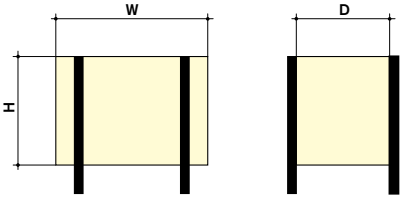

Dimensions (mm)

Type 1	H	W	D
TRB 60, TCB 26-30, TCB 26-40	50.5	60	32.5
Type 2			
TRB 70, TCB 32-40	50	70	43
Type 3			
TCB 44-63, TCB 55-80	50.5	95	43

Summation CT

- **BSA 02 - BSA 03**

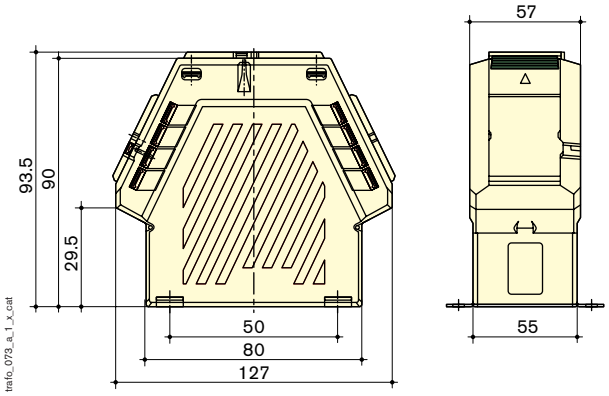

- **BSA 04**

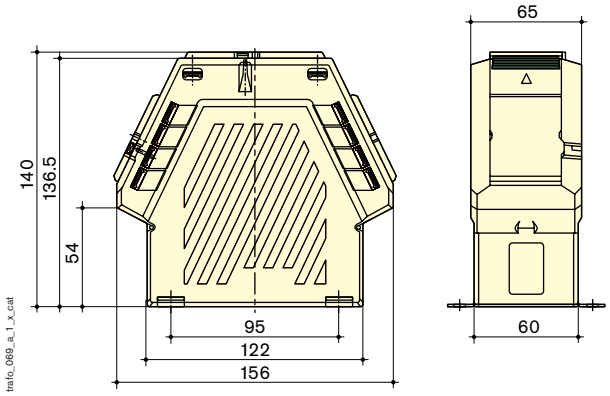

This document is not a contract. SOCOMEC reserves the right to modify features without prior notice in view of continued improvement. 2008 - 2009

Dimensions

Three-phase CT DIN rail mounted

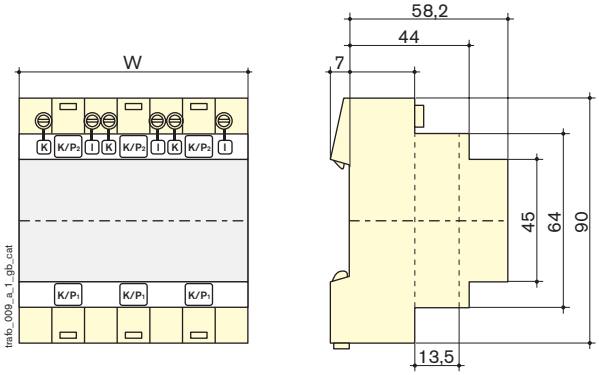

Number of modules	Front protection rating	Terminal block protection rating	W (mm)	Mounting
6	IP65	IP20	105	35 mm DIN rail

Split core CT

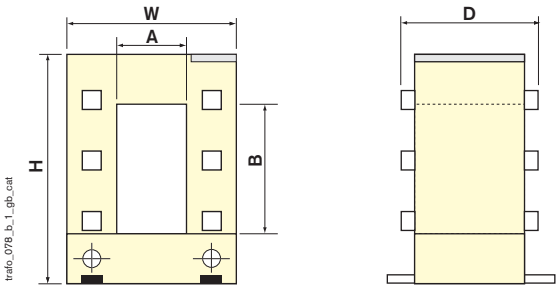

Fixed by M5 new

Dimensions (mm)

Type	A	B	H	W	D
TO 23	20	30	106	93	58
TO 58	50	80	152	125	58
TO 812	80	120	198	155	58
TO 816	80	160	246	195	79

This document is not a contract. SOCOMEC reserves the right to modify features without prior notice in view of continued improvement. 2008 - 2009

SELECTION GUIDE

> ENERGY METERING

Network analysis [B.44 - B.69]

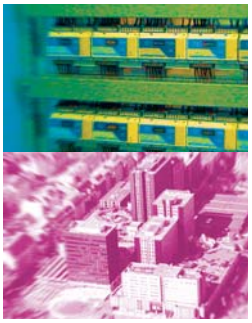

APPLICATIONS	COUNTIS AM10	COUNTIS Adc	COUNTIS AMd	COUNTIS AMt
Energy centralisation				
Metering for single-phase networks	●		●	●
Metering for LV three-phase networks				
Metering for 48 VAC networks		●		
CHARACTERISTICS				
DEVICE BODY				
Modular (DIN)	1 module	3 modules	3 modules	3 modules
Panel mounting				
DISPLAY				
LCD (7 digits)		•	•	•
LCD (6 digits)	•			
NETWORK				
48 VDC		•		
Single-phase	•		•	•
Two-phase 2 FE				
Three-phase 3, 4 FE or FNE (BT)				
CURRENT INPUTS				
Direct (non-isolated)	32 A		32 A	
Non-isolated (on 70 or 100 mV shunt)		600 A		
Non-isolated (on 5 A CT)				100 A
Isolated (on 5 A CT)				
VOLTAGE				
48 VDC - 6 to + 20 %		•		
230 VAC ± 20 %	•		•	•
230 VAC - 15 % to 400 VAC + 20 %				
400 VAC ± 15 %				
230 VAC - 10 % to 400 VAC + 30 %				
ON / OFF INPUTS				
PRECISION CLASS				
Class 1 (IEC 62053-21 / IEC 61036)	•		•	•
Class 5		•		
IMPULSE OUTPUTS				
Quantity	1	1	1	1
Fixed weight	100 Wh	100 Wh	100 Wh	100 Wh
Configurable weight				
Fixe pulse duration	100 ms			
Programmable impulse length		60 to 900 ms	60 to 900 ms	60 to 900 ms
DATA STORAGE				
Totals (kWh or pulses)				
Monthly (kWh)				
Average 10-minute power demand over 8 days (4 inputs)				
TARIFS				
	1	1	2	1
IM CODE (please consult us)	IM 100	IM 100	IM 100	IM 100
PAGES	see page B.26	see page B.28	see page B.30	see page B.30

This document is not a contract. SOCOMEC reserves the right to modify features without prior notice in view of continued improvement. 2008 - 2009

picto_108_a_gb

Services +
> Audit
> Setting up
> Training
See page IV

The monitoring of energy consumption is becoming a necessity in the optimising of the cost price of a product, or in the controlling of the operating costs of a building. The SOCOMEC **Energy metering offer** consists of several meters suited to all types of electrical networks and equipped with an output that can be centralised on a concentrator which can then be connected to a PC or a PLC programmable via an RS485 link.

count_104_a_4_cat

COUNTIS ATv2

count_119_a_4_cat

COUNTIS ATiv2

count_066_a_4_cat

COUNTIS ATd

count_042_a_3_cat

COUNTIS ATPv2

count_080_a_4_cat

COUNTIS Ci

				●
●	●	●	●	
4 modules	4 modules	7 modules		4 modules
			96 x 96 mm	
●	●	●	●	●
●	●	●	●	
●	●	●	●	
●	●	●	●	
		80 A		
6000 A				
	6000 A		6000 A	
		●		
●	●			
		●		
			●	
				7
●	●	●	●	
1	1	1	1	
			1 kWh	
100 Wh to 100 kWh	100 Wh to 100 kWh			
			100 ms	
60 to 900 ms	60 to 900 ms	60 to 900 ms		
				●
				●
				●
1	1 or 2	1	1	
IM 100	IM 100	IM 100	IM 100	/
see page B.32	see page B.32	see page B.36	see page B.38	see page B.42

CONTROL VISION Software

diris_488_a_2_cat

SPECIFICATION
- Instantaneous measurement display.
- General reading of measurements.
- Monthly general reading of COUNTIS Ci.
- Configuration of the devices.
- Database management.
- General reading of the instantaneous measurement.
- History of device measurements.
- General harmonics readings.
- Measurement curve.
- ...

see page B.64

Current transformers

trafo_077_b_2_cat

trafo_011_a_2_cat

trafo_008_a_2_cat

see page B.12

This document is not a contract. SOCOMEC reserves the right to modify features without prior notice in view of continued improvement. 2008 - 2009

COUNTIS AM10

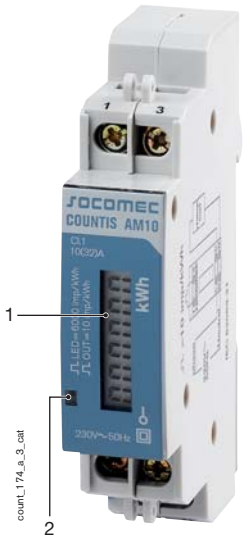

COUNTIS AM10

1. kWh displays.
2. Luminous consumption indicator (6000 pulses/kWh).

Functions

The **COUNTIS AM10** is a modular active energy meter designed for single phase networks. This product used for direct connections up to 32 A.

Conformity to standards

- IEC 62053-21 class 1
- IEC 61010-1
- IEC 61000-4-2
- IEC 61000-4-3
- IEC 61000-4-4
- IEC 61000-4-5
- IEC 61000-4-6
- IEC 61000-4-8
- IEC 61000-4-11
- IEC 60068-2-6
- IEC 60068-2-11
- IEC 60068-2-30

Applications

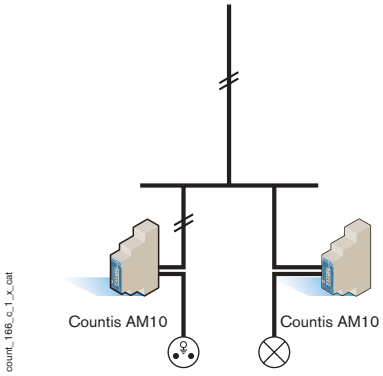

COUNTIS AM10 is a 32 A active energy meter.
An LCD display shows kWh consumption.
The **COUNTIS AM10** has a pulse output for kWh export to a data logger on PC.

This document is not a contract. SOCOMEC reserves the right to modify features without prior notice in view of continued improvement. 2008 - 2009

Reference

count_174_a

COUNTIS AM10

Connections	Reference
Direct 32 A	4850 **AM10**

Electrical characteristics

Current measurement (TRMS)

Type	32 A direct input
Input consumption	1 VA
Sustained overload	40 A
Overload	20 I_{max} for 500 ms
Minimum measured current	15 mA

Voltage measurement (TRMS)

Range of measurement	184 … 276 VAC
Input consumption	≤ 8 VA
Sustained overload	276 VAC

Energy accuracy

Active (according to IEC 62053-21)	Class 1

Auxiliary power supply

Self-supplied	yes

Output (pulsed)

Number	1
Type phototransistor	10 … 35 VDC
Fixed weight of impulses	100 Wh
Impulse duration	100 ms

Operating conditions

Operating temperature	- 20 … + 45 °C
Storage temperature	- 25 … + 70 °C
Relative humidity	85 %

Overall dimensions

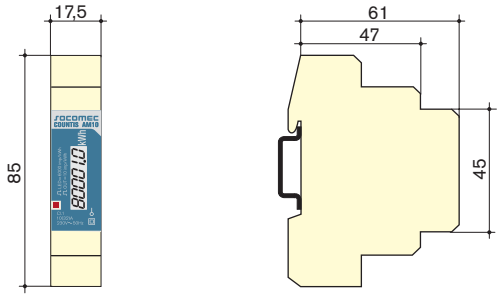

count_167_a_x_cat

Type	modular
Number of modules	1
Dimensions W x H x D	17.5 x 85 x 61 mm
Case protection rating	IP 20
Front protection rating	IP 50
Display type	LCD 5+1 digits
Rigid cable connection section	10 mm²
Flexible cable connection section	6 mm²
Weight	150 g

Terminal connections

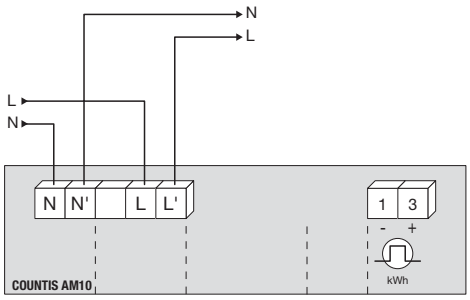

count_168_b_1_x_cat

N - L: Network voltage inputs
N' - L': Network voltage outputs
1 - 3: Pulse outputs

This document is not a contract. SOCOMEC reserves the right to modify features without prior notice in view of continued improvement. 2008 - 2009

COUNTIS Adc

COUNTIS Adc
48 VDC networks

1. kWh displays.
2. Button for total and partial meter display or to scroll through parameters.
3. Parameter and validation scrolling button.
4. Pulsed LCD indicates consumption (10 Wh/pulse).

Functions

COUNTIS Adc is an energy meter for 48 VDC networks with a direct reading of consumptions in kWh.

Conformity to standards

- IEC 61010-1
- IEC 61000-4-2
- IEC 61000-4-3
- IEC 61000-4-4
- IEC 61000-4-5
- IEC 61000-4-6
- IEC 61000-4-8
- IEC 61000-4-11
- IEC 60068-2-6
- IEC 60068-2-11
- IEC 60068-2-30

Applications

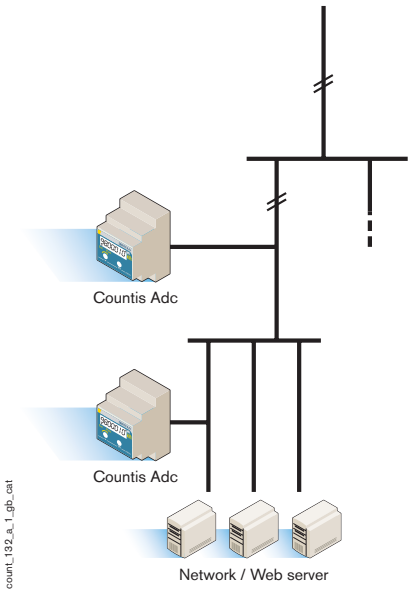

Standard features include a totalising meter, for a direct reading in kWh and a pulse output.
A partial meter (with RESET) enables totallisation of energy for specific time periods. It can be fully configured by the user via the keypad and the display (shunt primary, pulse duration and RESET of the partial meter).
Furthermore, associated with a COUNTIS Ci, a consumption centralisation will be possible via a PLC or the CONTROL VISION software.

This document is not a contract. SOCOMEC reserves the right to modify features without prior notice in view of continued improvement. 2008 - 2009

Reference

COUNTIS Adc

Connections	Reference
48 VDC	4851 **1000**

Electrical characteristics

Current measurement (TRMS)

Type	not insulated
CT primary	1 … 600 A
CT secondary	70 / 100 mV
Input consumption	≤ 1 mW
Overload	20 I_{max} for 500 ms
Minimum measured current	5 mV

Voltage measurement (TRMS)

Range of measurement	40.5 … 57 VDC
Input consumption	≤ 1.5 W
Sustained overload	60 VDC

Energy accuracy

Active (according to telecom standard)	5 % of 10 at 100 mV

Auxiliary power supply

Self-supplied	yes
DC voltage	48 VDC
Tolerance	-6 / +20 %

Output (pulsed)

Number	1
Type reed relay	100 VDC - 0.5 A - 12 VA
Fixed weight of impulses	100 Wh
Impulse duration	60 … 900 ms
Max. number of operations	5 x 10^7

Operating conditions

Operating temperature	-5 … +45 °C
Storage temperature	-20 … +70 °C
Relative humidity	85 %

Overall dimensions

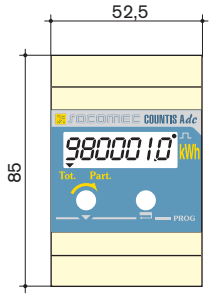

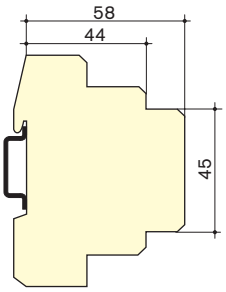

count_130_a_1_x_cat

Type	modular
Number of modules	3
Dimensions W x H x D	52.5 x 85 x 58 mm
Case protection rating	IP20
Front protection rating	IP40
Display type	LCD 6+1 digits
Rigid cable connection section	10 mm²
Flexible cable connection section	6 mm²
Weight	300 g

Terminal connections

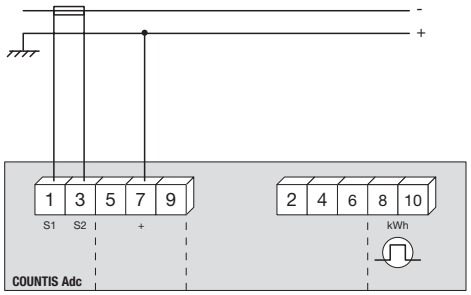

count_131_a_1_x_cat

1 - 3: current inputs
2 - 4 - 6: unused
7: voltage input +
5 - 9: unused
8 - 10: pulse outputs

This document is not a contract. SOCOMEC reserves the right to modify features without prior notice in view of continued improvement. 2008 - 2009

COUNTIS AMd
COUNTIS AMt

count_151_a_3_x_cat

COUNTIS AMd dual tariff 32 A direct connection

1. kWh displays.
2. Button for total and partial meter display or to scroll through parameters.
3. Tarif visualisation key (t1, t2), validation and parameter scrolling button.
4. Pulsed LCD indicates active consumption (10 Wh/pulse).

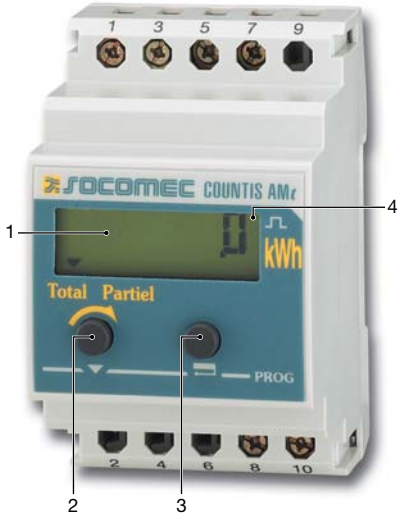

count_077_a_3_x_cat

COUNTIS AMt 100 A CT connection

1. kWh displays.
2. Button for total and partial meter display or to scroll through parameters.
3. Parameter and validation scrolling button.
4. Pulse LCD indicates active consumption (10 Wh/pulse).

Functions

The **COUNTIS AM** is a modular active energy meter designed for single phase networks.
This product is available in two versions:
- the **AMd**: used for direct connections up to 32 A,
- the **AMt**: used for connections up to 100 A via a current transformer.

Conformity to standards

- IEC 61036 class 1
- IEC 61010-1
- IEC 61000-4-2
- IEC 61000-4-3
- IEC 61000-4-4
- IEC 61000-4-5
- IEC 61000-4-6
- IEC 61000-4-8
- IEC 61000-4-11
- IEC 60068-2-6
- IEC 60068-2-11
- IEC 60068-2-30

Applications

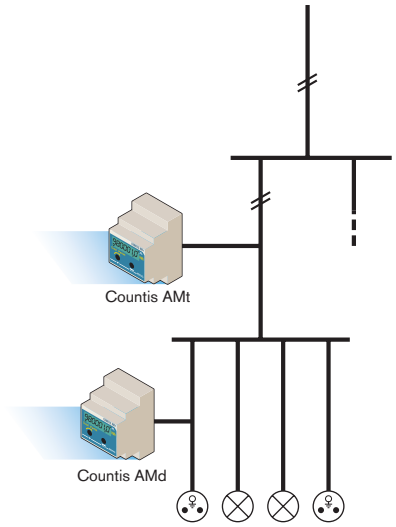

count_082_b_1_x_cat

The dual tariff **COUNTIS AM*d*** is equiped of two totallising counters (t1, t2) allowing a direct reading in kWh and a pulse output as standard. Two partial counters (t1, t2) with RESET will allow to count the energy on a specific period.
The **COUNTIS AM*t*** include a totalising meter, for direct reading in kWh and a pulse output as standard. A partial meter (with RESET) enables totallisation of energy for specific time periods.

These two versions can be fully configured by the user via the keypad and display (CT [for AMt] ratio, pulse duration and RESET of the partial counter).
Furthermore, associated with a COUNTIS Ci, a consumption centralisation will be possible via a PLC or the CONTROL VISION software.

This document is not a contract. SOCOMEC reserves the right to modify features without prior notice in view of continued improvement. 2008 - 2009

References

count_151_a_2_cat

count_077_a_2_cat

Connections	COUNTIS AMd dual tariff Reference	COUNTIS AMt Reference
Direct 32 A dual tariff	4851 **0002**	
On CT 5 A		4851 **0001**

Electrical characteristics

Current measurement (TRMS)

Type	non-insulated CT
CT primary	25, 40, 50, 75 and100 A (AMt) / 32 A direct input (AMd)
CT secondary	5 A (AMt)
Input consumption	2.5 VA (AMt) / 1 VA (AMd)
Overload	30 I_{max} for 10 ms (AMd) / 20 I_{max} for 500 ms (AMt)
Minimum measured current	100 mA (AMd) / 15 mA (AMt)

Voltage measurement (TRMS)

Range of measurement	184 … 276 VAC
Input consumption	≤ 15 VA
Sustained overload	289 VAC
Consumption	≤ 15 VA

Energy accuracy

Active (according to IEC 61036)	Class 1

Auxiliary power supply

Self-supplied	yes
Frequency	50 / 60 Hz

Output (pulsed)

Number	1
Type reed relay	100 VDC - 0.5 A - 12 VA
Fixed weight of impulses	100 Wh
Impulse duration	60 … 900 ms
Max. number of operations	5 x 10^7

Operating conditions

Operating temperature	-5 … +45 °C
Storage temperature	-20 … +70 °C
Relative humidity	85 %

Overall dimensions

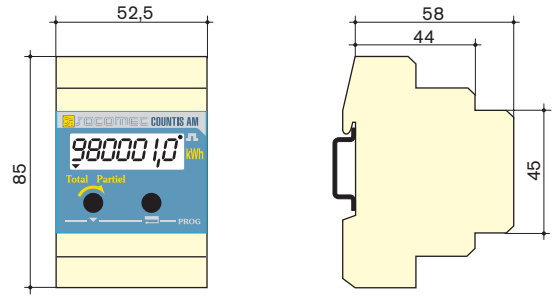

count_012_d_x_cat

Type	modular
Number of modules	3
Dimensions W x H x D	52.5 x 85 x 58 mm
Case protection rating	IP20
Front protection rating	IP40
Display type	LCD 6+1 digits
Rigid cable connection section	10 mm²
Flexible cable connection section	6 mm²
Weight	300 g

Terminal connections

- **COUNTIS AMd dual tariff**

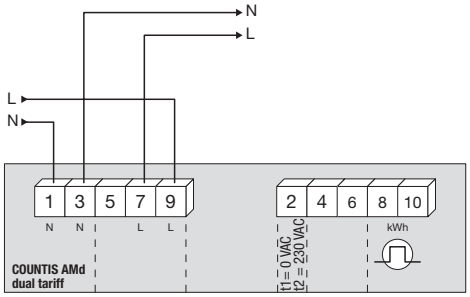

count_075_e_1_gb_cat

1 & 9: network voltage inputs
2: tariff changement input
4 & 6: unused

3 & 7: network voltage outputs to supply load
5: unused
8 & 10: pulse outputs

- **COUNTIS AMt**

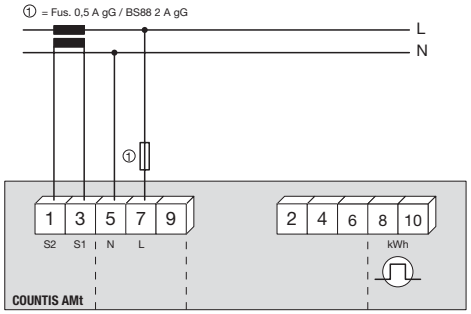

count_081_b_1_gb_cat

1 & 3: current inputs
2 & 4 & 6: unused
5 & 7: voltage inputs

9: unused
8 & 10: pulse outputs

This document is not a contract. SOCOMEC reserves the right to modify features without prior notice in view of continued improvement. 2008 - 2009

COUNTIS ATv2
COUNTIS ATiv2

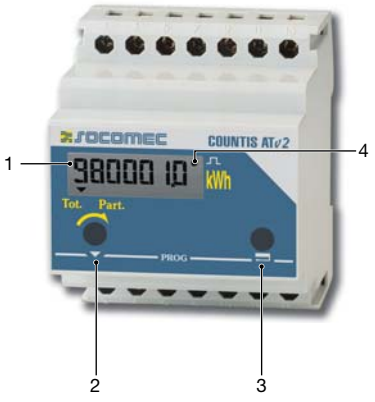

count_104_a_3_x_cat

COUNTIS ATv2 / ATiv2

1. kWh displays.
2. Button for total or partial meter or to scroll through parameters.
3. Parameter and validation scrolling button.
4. Pulsed LCD indicates consumption (10 Wh/pulse).

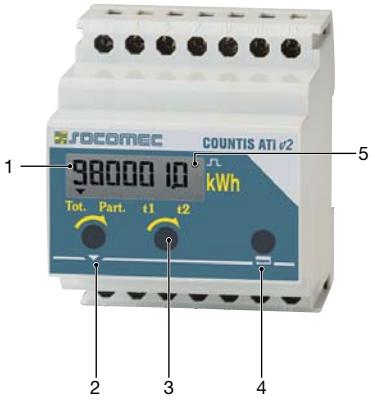

count_152_a_3_x_cat

COUNTIS ATiv2 dual tariff

1. kWh displays.
2. Button for total or partial meter or to scroll through parameters.
3. Tarif visualisation key (t1, t2).
4. Parameter and validation scrolling button.
5. Pulsed LCD indicates consumption (10 Wh/pulse).

Functions

COUNTIS AT is an active energy meter designed for two-phase and three-phase networks.

This product is available in two versions:

- **ATv2**: non-insulated active energy meter which cannot be used with earthed CT,
- **ATiv2**: insulated active energy meter which can be used with earthed CT secondaries.

Conformity to standards

- IEC 61036 class 1
- IEC 61010-1
- IEC 61000-4-2
- IEC 61000-4-3
- IEC 61000-4-4
- IEC 61000-4-5
- IEC 61000-4-6
- IEC 61000-4-8
- IEC 61000-4-11
- IEC 60068-2-6
- IEC 60068-2-11
- IEC 60068-2-30

Applications

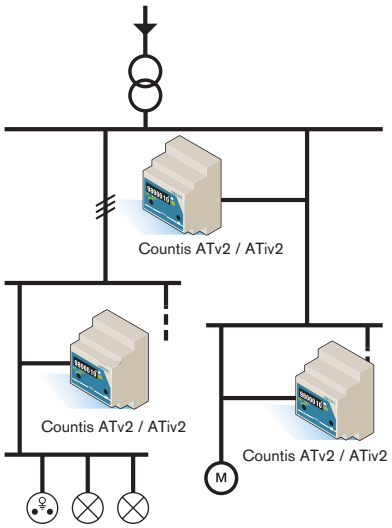

count_120_c_1_x_cat

The **COUNTIS ATv2** and **ATiv2** include a totalising meter, for direct reading in kWh and a pulse output as standard. A partial meter (with RESET) enables totallisation of energy for specific time periods.

The dual tariff **COUNTIS ATiv2** is equiped of two totalising counters (t1, t2) allowing a direct reading in kWh and a pulse output as standard. Two partial counters (t1, t2) with RESET will allow to count the energy on a specific period.

These three versions can be fully configured by the user via the keyboard and the display (CT ratio, pulse weight and RESET).

Furthermore associated with a COUNTIS Ci, a consumption centralisation is possible via a PLC or a equipped PC with the CONTROL VISION software.

This document is not a contract. SOCOMEC reserves the right to modify features without prior notice in view of continued improvement. 2008 - 2009

References

Standard device	COUNTIS ATv2 5A CT	COUNTIS ATiv2 5A CT	COUNTIS ATiv2 dual tariff 5A CT
Connection	References	References	References
230 / 400 VAC	4850 **2000**	4850 **2100**	
Dual tariff device			
230 / 400 VAC			4850 **2102**
Accessory			
Panel mounting kit	192J **8015**	192J **8015**	192J **8015**

Electrical characteristics

Current measurement (TRMS)

Type	insulated (ATiv2) / non-insulated (ATv2)
CT primary	5 … 6000 A
CT secondary	5 A
Input consumption	≤ 1 VA
Sustained overload	7 A

Voltage measurement (TRMS)

Direct measurement between phases	230 VAC -15% … 400 VAC +20%
Input consumption	≤ 0.5 VA
Frequency	50 / 60 Hz

Energy accuracy

Active (according to IEC 61036)	Class 1

Auxiliary power supply

Self-supplied	yes
Consumption	≤ 1 VA

Output (pulsed)

Number	1
Type reed relay	100 VDC - 0.5 A - 10 VA
Programmable impulse weight	100 Wh … 100 kWh
Impulse duration	60 … 900 ms
Max. number of operations	5×10^7

Operating conditions

Operating temperature	-5 … +45 °C
Storage temperature	-20 … +70 °C
Relative humidity	85%

This document is not a contract. SOCOMEC reserves the right to modify features without prior notice in view of continued improvement. 2008 - 2009

COUNTIS ATv2
COUNTIS ATiv2

Overall dimensions

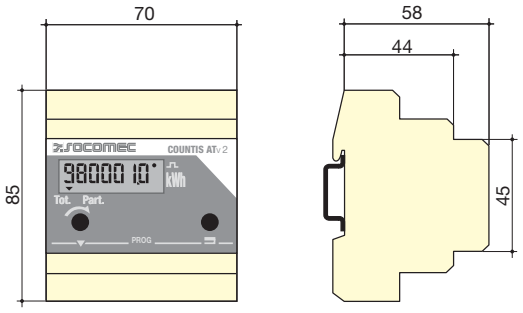

count_121_b_1_x_cat

Type	modular
Number of modules	4
Dimensions W x H x D	70 x 85 x 58 mm
Case protection rating	IP20
Front protection rating	IP40
Display type	LCD
Terminal blocks type	fixed
Rigid cable connection section	1 … 10 mm²
Flexible cable connection section	0.5 … 6 mm²
Weight	500 g

Terminals

- **COUNTIS ATv2 / ATiv2**

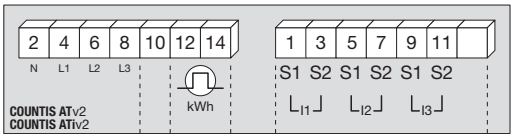

count_122_a_1_x_cat

1 - 3: phase 1 current input
2 - 4 - 6 - 8: voltage inputs
5 - 7: phase 2 current input
9 - 11: phase 3 current input
10: unused
12 - 1: pulse output for external meter

- **COUNTIS ATiv2 dual tariff**

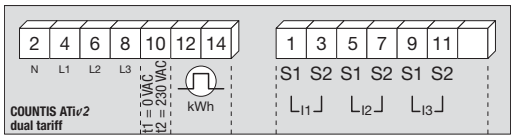

count_149_c_1_gb_cat

1 - 3: phase 1 current input
2 - 4 - 6 - 8: voltage inputs
5 - 7: phase 2 current input
9 - 11: phase 3 current input
10: tariff changement input
12 - 14: pulse output for external meter

This document is not a contract. SOCOMEC reserves the right to modify features without prior notice in view of continued improvement. 2008 - 2009

Connections

Earthing of current transformers for COUNTIS ATiv2 only.

Recommendation: during a disconnection of the COUNTIS, the secondaries of each electic current transformer must be short-circuited. This operation can be carried out automatically by a product in the SOCOMEC catalogue, PTI: please consult us.

Low voltage unbalanced network

- **3/4 wires with 3 CTs**

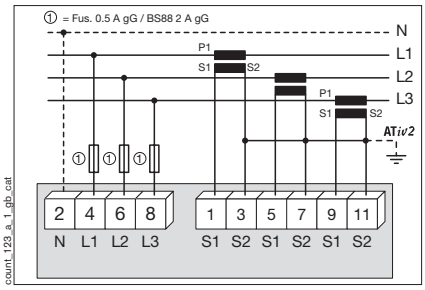

- **3 wires with 2 CTs**

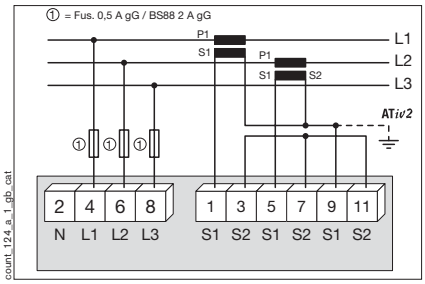

The use of 2 CTs reduces by 0.5 % the accuracy of the phase whose current is determined by vector calculation

- **3 wires with 2 CTs**

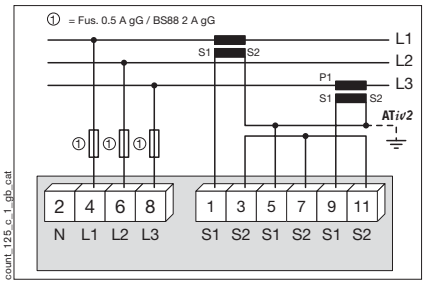

The use of 2 CTs reduces by 0.5 % the accuracy of the phase whose current is determined by vector calculation

Low voltage balanced network

- **3/4 wires with 1 CT**

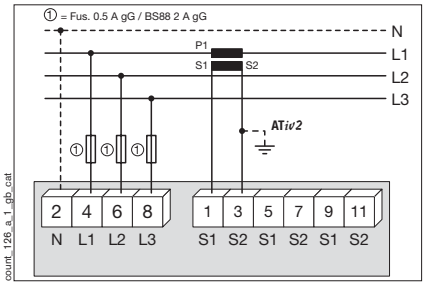

The use of 1 CT reduces by 0.5 % the accuracy of the phases whose current is determined by vector calculation

- **Two phases**

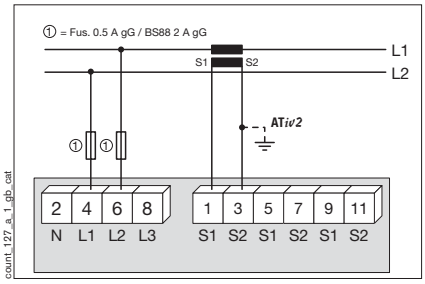

- **Single phase**

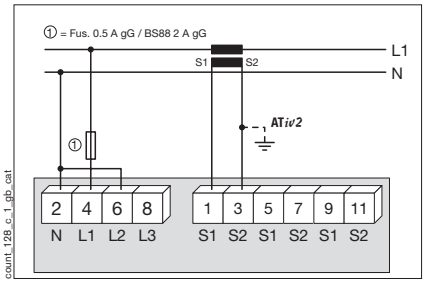

Other informations

- **External meter with external power supply**

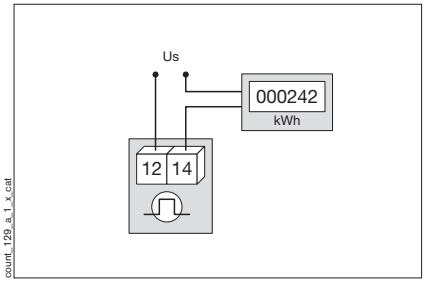

- **Tariff change input**

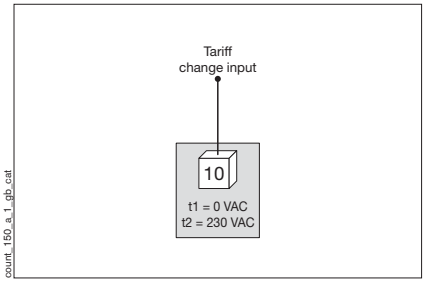

This document is not a contract. SOCOMEC reserves the right to modify features without prior notice in view of continued improvement. 2008 - 2009

COUNTIS ATd

count_066_b_3_x_cat

COUNTIS ATd
80 A direct connection

1. Connection of active conductors by cable passing or terminals.
2. kWh displays (total and partial).
3. Pushbutton for scrolling through configuration or total (Tot.) and partial (Part.) display parameters.
4. Pushbutton for configuration parameter validation.
5. Pulsed LCD indicates active consumption (10 Wh/pulse).

Functions

The **COUNTIS ATd** is a direct powered instrument designed for applications in sub-metering three phase active energy up to 80 A.

This product is based on a principle which is unique on the market, using direct passage measurement with 3 or 4 cables (with or without neutral) or via standard connection terminals.

Passing cables through holes means that from 3 or 4 cables, 3 currents and 3 voltages can be measured and the device can be powered. Measurement of voltages and power supply are made through insulation piercing screws.

Conformity to standards

- IEC 61036 class 1
- IEC 61010-1
- IEC 61000-4-2
- IEC 61000-4-3
- IEC 61000-4-4
- IEC 61000-4-5
- IEC 61000-4-6
- IEC 61000-4-8
- IEC 61000-4-11
- IEC 60068-2-6
- IEC 60669-1
- IEC 60669-2

Applications

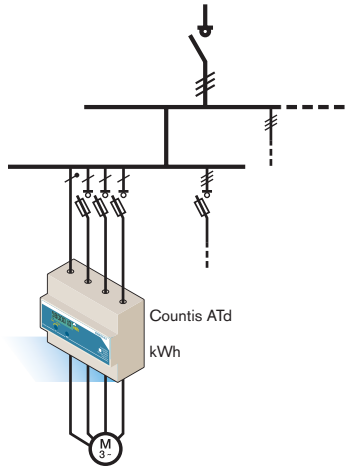

count_073_b_1_x_cat

The **COUNTIS ATd** is equiped with an adding counter allowing a direct reading in kWh and a pulse output as standard.
A partial meter (with RESET) enables totallisation of enery for specific time periods. The ATd can be fully configured by the user via the keypad and the display (type of network and pulse duration).
Furthermore associated with a COUNTIS Ci, a consumption centralisation is possible via a PLC or a equipped PC with the CONTROL VISION software.

This document is not a contract. SOCOMEC reserves the right to modify features without prior notice in view of continued improvement. 2008 - 2009

References

count_066_b_2_cat

COUNTIS ATd

Network voltage between phases	References
230 VAC	4850 **0300**
400 VAC	4850 **1300**

Electrical characteristics

Current measurement (TRMS)

Type	direct
Measurement range	0.8 … 80 A
Input consumption	2.5 VA
Sustained overload	125 A
Overload	30 I_n during 0.01 s

Voltage measurement (TRMS)

Direct measurement between phases	230 ± 20 % / 400 ± 15 % VAC
Input consumption	2 VA
Frequency	50 / 60 Hz

Energy accuracy

Active (according to IEC 61036)	Class 1

Auxiliary power supply

Self-supplied	yes
Consumption	2 VA

Output (pulsed)

Number	1
Type reed relay	100 VDC - 0.5 A - 12 VA
Fixed weight of impulses	100 Wh
Impulse duration	60 … 900 ms
Max. number of operations	5 x 10^7

Operating conditions

Operating temperature	-5 … +45 °C
Storage temperature	-20 … +70 °C
Relative humidity	85 %

Overall dimensions

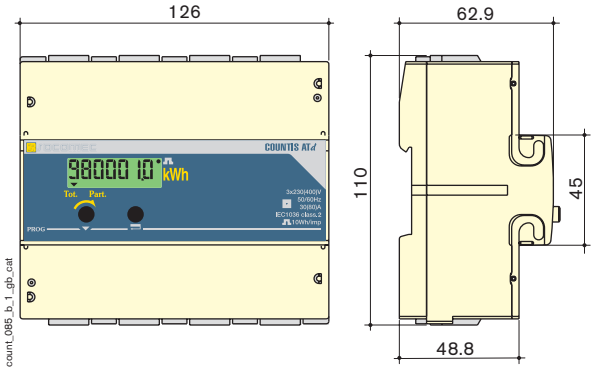

count_085_b_1_gb_cat

Type	modular
Number of modules	7
Dimensions W x H x D	126 x 110 x 62.9 mm
Case protection rating	IP20
Front protection rating	IP40
Display type	LCD
Terminal block type	fixed
Max. section of connection per cable channel	25 mm^2
Max. section of connections to terminals	50 mm^2
Rigid connection section of the impulse output	1.5 … 10 mm^2
Flexible connection section of the impulse output	1 … 6 mm^2
Weight	700 g

Terminal connections

- **By passing the cables through**

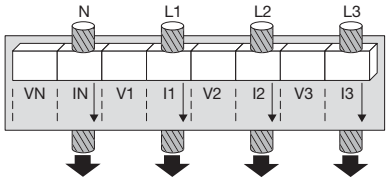

count_102_b_1_x_cat

- Currents: cables pass in I1, I2, I3 and IN (if distributed neutral).
- Voltages: piercing of cable insulation through I1, I2, I3 and IN (if distributed neutral).

- **By cutting the cables**

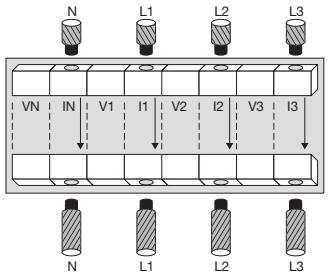

count_103_b_1_x_cat

Currents and voltages: connection on both sides of the casing of terminals I1, I2, I3 and IN (if distributed neutral).

This document is not a contract. SOCOMEC reserves the right to modify features without prior notice in view of continued improvement. 2008 - 2009

COUNTIS ATPv2

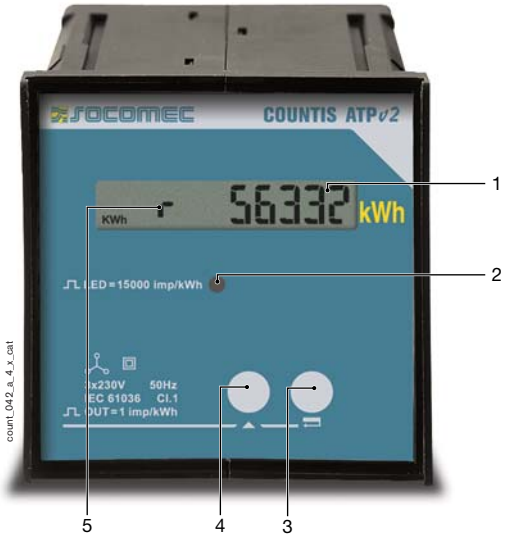

COUNTIS ATPv2

1. kWh displays.
2. LED calibration: 15000 imp/kWh.
3. Menu validation button.
4. Menu browsing button.
5. Inversion of the CT's secondary.

Functions

COUNTIS ATPv2 is an insulated active energy meter designed for two-phase and three-phase LV networks.

Conformity to standards

- IEC 61036 class 1
- IEC 61000-4-2
- IEC 61000-4-3
- IEC 61000-4-4
- IEC 61000-4-5
- IEC 61000-4-6
- IEC 61000-4-8
- IEC 61000-4-11
- IEC 60068-2-6
- IEC 60068-2-11
- IEC 61010-1

Applications

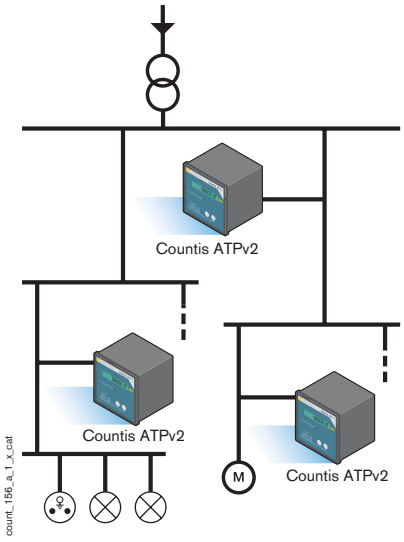

COUNTIS ATPv2 has as standard a totalising meter allowing a direct reading of the kWh and a pulse output.

The CT ratio can be configured by the user via the keypad and the display screen.

Furthermore associated with a COUNTIS Ci, a consumption centralisation is possible via a PLC or a equipped PC with the CONTROL VISION software.

This document is not a contract. SOCOMEC reserves the right to modify features without prior notice in view of continued improvement. 2008 - 2009

count_042_a_3_x_cat

Reference

Connection	COUNTIS ATPv2 5A CT Reference
400 VAC	4850 **0201**

Electrical characteristics

Current measurement (TRMS)

Type	isolated
CT primary	5 … 6000 A
CT secondary	5 A
Input consumption	< 0.5 VA
Sustained overload	7 A
Intermittent overload	20 I_{max} for 500 ms

Voltage measurement (TRMS)

Direct measurement between phases	208 … 520 VAC
Direct measurement between phase and neutral	120 … 300 VAC
Input consumption	< 1Wh / Phase
Permanent overload between phases	520 VAC
Frequency	50 / 60 Hz

Energy accuracy

Active (according to IEC 61036)	Class 1

Auxiliary power supply

Self-supplied	yes

Output (pulsed)

Number	1
Type phototransistor	10 … 24 VDC
Fixed weight of impulses	1 kWh
Impulse duration	100 ms

Operating conditions

Operating temperature	-10 … +55 °C
Storage temperature	-20 … +85 °C
Relative humidity	95 %

This document is not a contract. SOCOMEC reserves the right to modify features without prior notice in view of continued improvement. 2008 - 2009

COUNTIS ATPv2

Overall dimensions

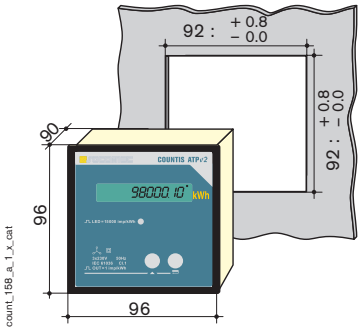

Type	panel mounting
Dimensions W x H x D	96 x 96 x 90 mm
Case protection rating	IP20
Front protection rating	IP54
Display type	LCD
Terminal blocks type	fixed
Connection section	0.5 … 4 mm²
Weight	300 g

Terminals

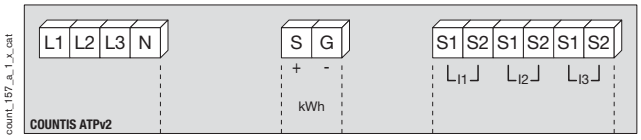

S1 - S2: current inputs
S - G: pulse output
L1 - L2 - L3: voltage inputs

This document is not a contract. SOCOMEC reserves the right to modify features without prior notice in view of continued improvement. 2008 - 2009

Connections

Recommendation: during a disconnection of the COUNTIS, the secondaries of each electric current transformer must be short-circuited. This operation can be carried out automatically from a product in the SOCOMEC catalogue, PTI: please consult us.

Low voltage balanced network

- **Single-phased**

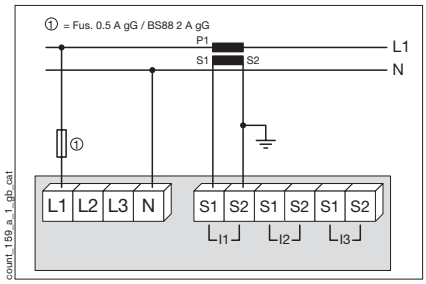

Low voltage unbalanced network

- **3/4 wires with 3 CTs**

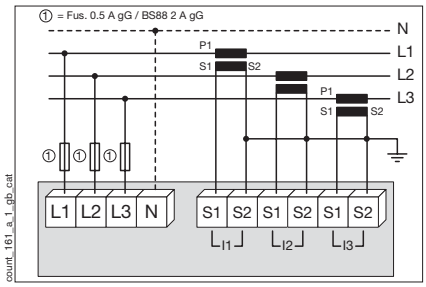

- **3 wires with 2 CTs**

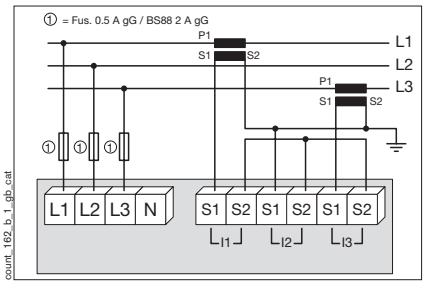

The use of 2 CTs reduces by 0.5 % the accuracy of the phase whose current is determined by vector calculation

- **3 wires with 2 CTs**

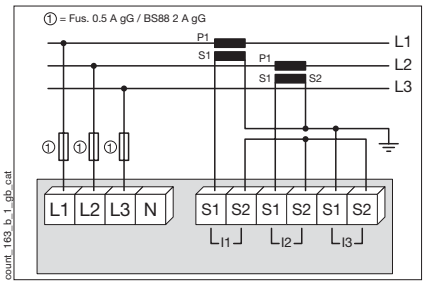

The use of 2 CTs reduces by 0.5 % the accuracy of the phase whose current is determined by vector calculation

Complementary information

- **External meter with external power supply**

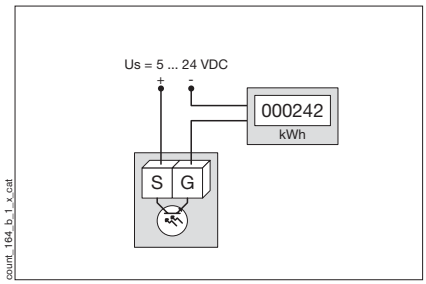

This document is not a contract. SOCOMEC reserves the right to modify features without prior notice in view of continued improvement. 2008 - 2009

COUNTIS Ci

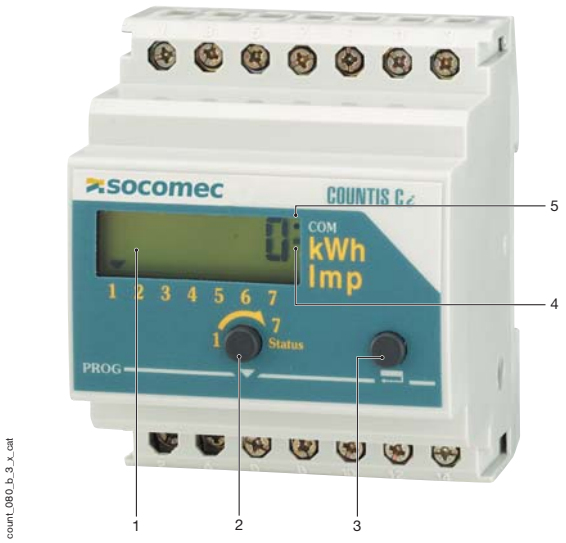

Functions

The **COUNTIS Ci** is a pulse collector communicating via an RS485 link using JBUS/MODBUS protocol®.

Through 7 insulated on/off inputs, it counts the number of pulses from different energy meters (water, air, gas, electricity,...) and transmits this information to a PC equipped with CONTROL VISION software or PLC.

Conformity to standards

- IEC 61010-1
- IEC 61000-4-2
- IEC 61000-4-3
- IEC 61000-4-4
- IEC 61000-4-5
- IEC 61000-4-6
- IEC 61000-4-8
- IEC 61000-4-11
- IEC 60068-2-6
- IEC 60068-2-11
- IEC 60068-2-30

COUNTIS Ci

1. Displays consumption per input (▼).
2. Pushbutton to display consumption and status per input.
3. Validation pushbutton in programming mode.
4. Unit indicator (kWh or Imp)
5. Indicator for communication (COM).

Applications

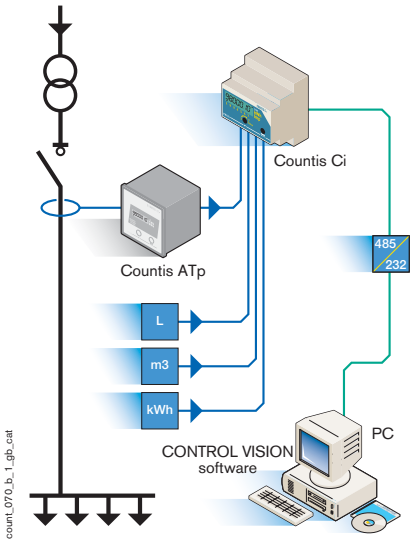

In the knowledge that electricity is not the only energy consumption source, COUNTIS allows centralising of other units such as water, air or gas.

CONTROL VISION software, via the **COUNTIS Ci** concentrator and its RS485 link JBUS/MODBUS ® protocol allows centralising all these consumptions whilst guaranteeing an optimal accuracy and ease of exploitation (Windows™ environment).

The **COUNTIS Ci** provides:

- 7 global counters to count kWh or a number of pulses,
- time-dated memory for kWh consumed over one month for each input. This record is carried out once a month for 12 successive months. These values are accessible by JBUS/MODBUS®,
- 4 of these 7 inputs can reconstitute an average power as required over a period of 8, 10, 15, 20 or 30 minutes. Values are stored in 10-minute segments for 8 days,
- status of the 7 inputs (status).

This document is not a contract. SOCOMEC reserves the right to modify features without prior notice in view of continued improvement. 2008 - 2009

References

COUNTIS Ci

Auxiliary power supply U_s	References
230 / 400 VAC	4852 **0000**

Accessory

Panel mounting kit	192J **8015**

Electrical characteristics

Auxiliary power supply

Self-supplied	no
AC voltage	230 / 400 VAC
Tolerance	± 15 %
Frequency	50 / 60 Hz
Consumption	< 5 VA
Insulation voltage	2.5 kV

Communication

Link	RS-485
Type	2 … 3 half duplex wires
Protocol	JBUS/MODBUS® in RTU mode
JBUS/MODBUS® speed	4800 … 38400 bauds

Entrées

Number	7
Control voltage (integrated)	10 … 30 VDC
Minimum signal width	10 ms
Maximum signal width	2 s
Minimum length between 2 impulses	18 ms
Edge triggering	rising
Type	on/off

Operating conditions

Operating temperature	-5 … +45 °C
Storage temperature	-20 … +70 °C
Relative humidity	85 %

Overall dimensions

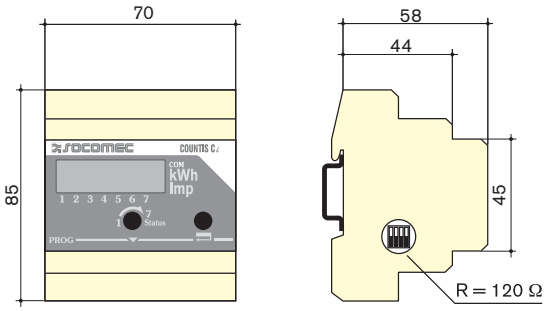

Type	modular
Number of modules	4
Dimensions W x H x D	70 x 85 x 58 mm
Case protection rating	IP20
Front protection rating	IP40
Display type	LCD
Terminal blocks type	fixed
Rigid cable connection section	1 … 10 mm²
Flexible cable connection section	0.5 … 6 mm²
Weight	500 g

Terminal connections

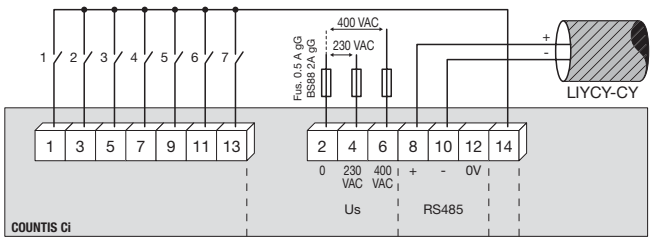

1: on/off input no. 1
3: on/off input no. 2
5: on/off input no. 3
7: on/off input no. 4
9: on/off input no. 5
11: on/off input no. 6
13: on/off input no. 7

2 - 4 - 6: auxiliary power supply U_s
8 - 10 - 12: RS485 link
14: internal direct source to supply the 7 inputs

This document is not a contract. SOCOMEC reserves the right to modify features without prior notice in view of continued improvement. 2008 - 2009

SELECTION GUIDE

Energy metering [B.24 - B.43]

> NETWORK ANALYSIS

APPLICATIONS

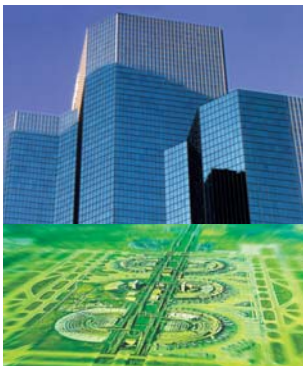

	DIRIS Am
Multi-measurement and metering	HL / LV
Harmonics analysis	
Monitoring parameters	
Energy management	
Monitoring and control	
Communication	optional

CHARACTERISTICS

MEASUREMENTS	
3U, 3V, 3I, In, 3P, ±ΣP, 3Q, ±ΣQ, 3S, ΣS, 3 PF, ΣPF (L/C) and F	•
Neutral measurement via CT	
3U, 3V, 3I, In, ΣP, ΣQ, ΣS, ΣPF (L/C) and F	
Average and maximum values integrated 3I, In, 3U, 3V, F, ±ΣP, ±ΣQ and ΣS	•
Maximum values integrated 3I, In, +ΣP	
THD 3I, THD 3U, THD 3V up to number 31	
THD In, THD 3I, THD 3U, THD 3V up to number 51	
Memorisation of instant min. and max. values 3U, 3I, In, ±ΣP, ±ΣQ, ΣS, ΣPF, F, THD 3I, THD In, THD 3U, THD 3V	
METERING	
Hours run metering	•
± kWh, ± kvarh and kVAh	optional
kWh and kvarh	
Configurable impulse outputs	2 optional
External impulse metering inputs	
Storing P+, P-, Q+ and Q- values with internal/external synchronisation signal (5 to 30 minutes) during 62 days	
PRECISION CLASS	
Class 0.5 S IEC 62053-22	
Class 1 IEC 62053-21	•
Class 2 IEC 62053-23	•
HARMONICS	
THD 3I, In, 3U, and 3V up to number 51	
3I, In, 3V, 3U up to number 25	
MONITORING	
Relays for: 3I, 3U, 3V, In, ±ΣP, ±ΣQ, ΣS, F ΣPF L/C, THD 3I, THD In, THD 3U, THD 3V and hours run metering	
Storing last 10 time stamped alarms	
Storing last 10 time stamped voltage dips, surges and voltage	
MONITORING / CONTROL	
Inputs for position monitoring and operation counting	
Output for the remote control	
COMMUNICATION	
Configurable analogue outputs	
RS485 with JBUS / MODBUS®	option
RS485 with PROFIBUS DP®	
IM CODE (please consult us)	up to 610

PAGES

see page B.46

This document is not a contract. SOCOMEC reserves the right to modify features without prior notice in view of continued improvement. 2008 - 2009

picto_108_a_gb

Services +
> Audit
> Setting up
> Training
See page IV

The SOCOMEC **Network analysis** offer consists of several products plus a software suitable for all types of electrical networks for the measurement and monitoring of electrical parameters, the metering of energies or impulses (water, air…), the management of electrical energy from 10 minute average powers, the monitoring/control of installations and communication with a PC or a PLC.

diris_560_b_2_cat

DIRIS A20

diris_561_b_2_cat

DIRIS A40/A41

LV	HL / LV
	●
	●
	●
	●
●	●
	•
	A41
•	
	•
•	
•	
	•
	optional
	•
	•
•	
1 optional	2 optional
	2 to 6 optional
	option
•	•
•	•
	•
	optional
	2 to 6 optional
	optional (10)
	optional (10)
	2 to 6 optional
	2 to 6 optional
	2 to 4 optional
optional	optional
	optional
up to 210	up to 774
see page B.50	see page B.54

COMMUNICATION INTERFACES

NEW

inter_043_a

RS232 / RS485 interface

inter_002_a

USB / RS485 interface

see page B.60

Current transformers

trafo_077_b_2_cat

trafo_011_a_2_cat

trafo_008_a_2_cat

see page B.12

DIRIS VISION software

diris_559_a_1_cat

SPECIFICATION
- Analogue statement of the instantaneous measurement.
- Digital statement of the instantaneous measurement.
- General harmonics readings.
- General reading of the DIRIS measurements.

see page B.62

CONTROL VISION software

diris_488_a_2_cat

SPECIFICATION
- Instantaneous measurement display.
- General reading of measurements.
- Monthly general reading of COUNTIS Ci.
- Configuration of the devices.
- Database management.
- General reading of the instantaneous measurement.
- History of device measurements.
- General harmonics readings.
- Measurement curve.
- …

see page B.64

BILLING APPLICATION software

NEW

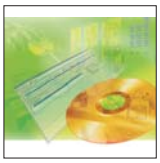
couv_132_a_1_cat

SPECIFICATION
- Definition of tariff.
- Invoice creation.
- Comparison of 2 charge curves.

see page B.68

This document is not a contract. SOCOMEC reserves the right to modify features without prior notice in view of continued improvement. 2008 - 2009

DIRIS Am

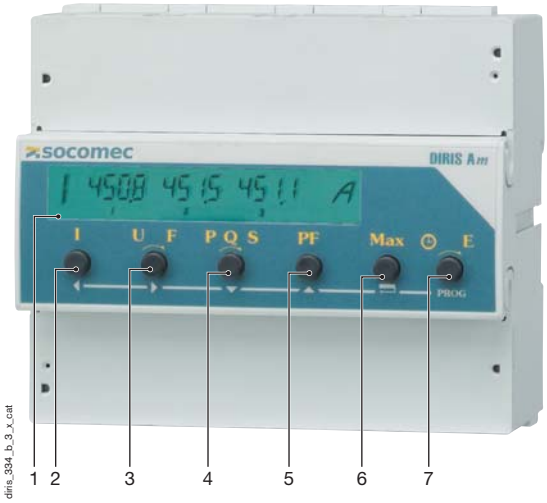

DIRIS Am

1. Backlit LCD display.
2. Direct access key for currents.
3. Direct access key for voltages and frequency.
4. Direct access key for active, reactive and apparent power.
5. Direct access key for power factor.
6. Direct access key for max. current and power values.
7. Direct access key for hours run meter and energies (option).

Functions

The **DIRIS Am** is a multi-function meter for measuring electrical values for single, two and three phase low and high voltage networks. All the parameters can be configured and displayed on its front panel display and the following functions used:
- measurement,
- hours run meter,
- energy meter,
- communication.

Conformity to standards

- IEC 61036 class 1
- IEC 61268 class 2
- IEC 61010-1
- IEC 61000-4-2
- IEC 61000-4-3
- IEC 61000-4-4
- IEC 61000-4-5
- IEC 61000-4-6
- IEC 61000-4-8
- IEC 61000-4-11
- IEC 60068-2-6
- IEC 60068-2-11
- IEC 60068-2-30

Direct access

Easy to read

Applications

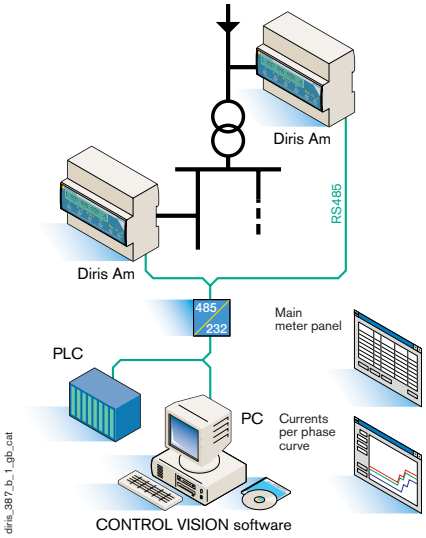

Using electrical parameters means using several analogue or digital single-function products such as ammeters, voltmeters and wattmeters.

DIRIS Am has six direct access keys and LCD display. LV and HV installation parameters can be centralised on a PC or a PLC through an RS485 link using JBUS/MODBUS® protocol. The DIRIS Am is easy to install and can be DIN rail mounted.

Measurement in real effective values (TRMS):
- of instant current per phase and neutral, average and maximum over a programmable period,
- phase-to-neutral and phase-to-phase voltages,
- frequency,
- active power in 4 quadrants (±) per phase and total in instantaneous, average and maximum values over a programmable period,
- reactive power in 4 quadrants (±) per phase and total in instantaneous, average and maximum values over a programmable period,
- apparent power per phase and total in instantaneous, average and maximum values over a programmable period,
- power Factor (PF) per phase and total with inductive or capacitive indication.

Hours run meter

Hours run meter to 1/100th of an hour for the duration of operation.

This document is not a contract. SOCOMEC reserves the right to modify features without prior notice in view of continued improvement. 2008 - 2009

References

Base unit with backlit display	DIRIS Am
Auxiliary power supply U_s	References
110 … 400 VAC / 120 … 350 VDC	4810 **0100**
Base unit with backlit display and metering option	
Auxiliary power supply U_s	
110 … 400 VAC / 120 … 350 VDC	4810 **0101**
Base unit with backlit display, metering and communication options	
Auxiliary power supply U_s	
110 … 400 VAC / 120 … 350 VDC	4810 **0103**

Compact dimension

Energy metering

± kWh, ± kvarh and kVah with 2 configurable pulse outputs (weight and run).

Communication

RS485 2 or 3 wires with JBUS / MODBUS ® protocol and transmission speed up to 38400 bauds.

Overall dimensions

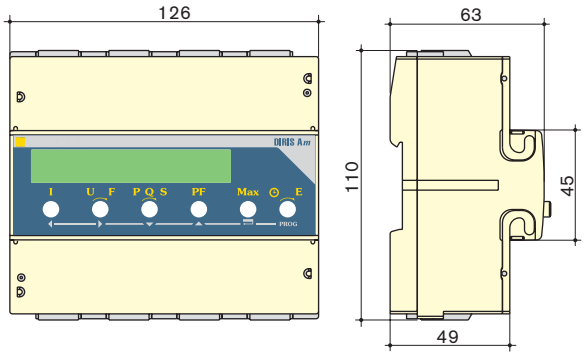

Type	modular
Number of modules	7
Dimensions W x H x D	126 x 110 x 63 mm
Case protection rating	IP20
Front protection rating	IP40
Display type	LCD
Terminal block type	fixed
Rigid cable connection section	1.5 … 10 mm²
Flexible cable connection section	1 … 6 mm²
Weight	640 g

This document is not a contract. SOCOMEC reserves the right to modify features without prior notice in view of continued improvement. 2008 - 2009

DIRIS Am

Electrical characteristics

Current measurement on insulated inputs (TRMS)

CT primary	10 000 A
CT secondary	1 or 5 A
Measurement range	0 … 11 kA
Input consumption	≤ 0,1 VA
Measurement updating period	1 s
Accuracy	0.5 %
Sustained overload	6 A
Intermittent overload	10 I_n for 1 s
Insulation voltage	1.5 kV

Voltage measurement (TRMS)

Direct measurement between phases	50 … 700 VAC
Direct measurement between phase and neutral	28 … 404 VAC
VT primary	400 kV
VT secondary	60, 100, 110, 173, 190 VAC
Input consumption	≤ 0.1 VA
Measurement updating period	1 s
Accuracy	0.5 %
Sustained overload	760 VAC
Insulation voltage	1.5 kV
Frequency	50 / 60 Hz

Current-voltage product

Limitation for 1A CT	2 000 000
Limitation for 5A CT	2 000 000

Power measurement

Measurement range	0 … 1 660 000 kW / kvar / kVA
Measurement updating period	1 s
Accuracy	1 %

Power factor measurement

Measurement updating period	1 s
Accuracy	1 %

Frequency measurement

Measurement range	45 … 65 Hz
Measurement updating period	1 s
Accuracy	0.1 Hz

Energy accuracy

Active (according to IEC 61036)	Class 1
Reactive (according to IEC 61268)	Class 2

Auxiliary power supply

AC voltage	110 … 400 VAC
AC tolerance	± 10 %
DC voltage	120 … 350 VDC
DC tolerance	± 20 %
Frequency	50 / 60 Hz
Consumption	≤ 10 VA
Insulation voltage	4 kV

Outputs (pulsed)

Number of relays	2
Type	100 VDC - 0.5 A - 10 VA
Max. number of operations	≤ 10^8

Communication

Link	RS485
Type	2 … 3 wires half duplex
Protocol	JBUS/MODBUS® in RTU mode
JBUS/MODBUS® speed	2400 … 38400 bauds

Operating conditions

Operating temperature	- 10 … + 55 °C
Storage temperature	- 20 … + 85 °C
Relative humidity	95 %

Terminals

• **Bottom terminals**

diris_404_a_1_x_cat

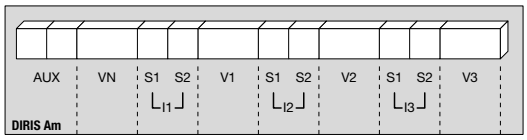

S1 - S2: current inputs
AUX: auxiliary power supply U_s
V1 - V2 - V3 - VN: voltage inputs

• **Top terminals**

diris_405_a_1_x_cat

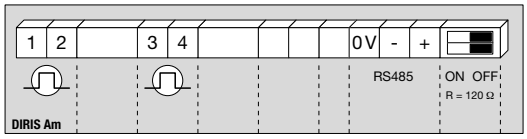

Option: metering output
1 - 2: pulse output no. 1
3 - 4: pulse output no. 2

Option: communication
RS485: RS485 link using JBUS/MODBUS® protocol
R = 120 Ω: internal resistance for the RS485 link

This document is not a contract. SOCOMEC reserves the right to modify features without prior notice in view of continued improvement. 2008 - 2009

Connections

Recommendation: when disconnecting the DIRIS, the secondaries of each current transformer must be short-circuited. This operation can be carried out automatically with a product in the SOCOMEC catalogue, PTI (only available for 5 A secondary): please consult us.

Low voltage balanced network

• 3/4 wires with 1 CT

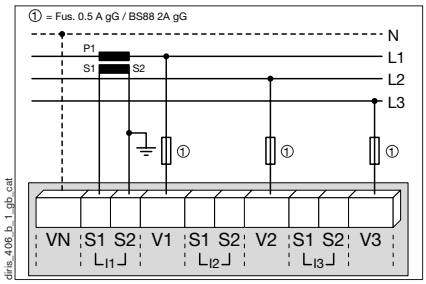

The use of 1 CT reduces by 0.5 % the accuracy of the phases whose current is determined by vector calculation

• Single-phase

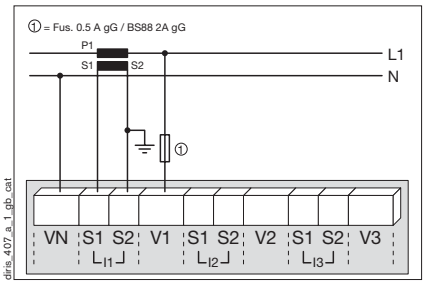

• Two phases

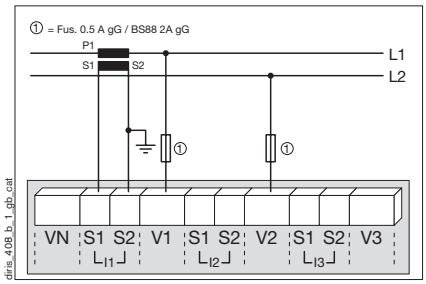

Low voltage balanced network

• 3/4 wires with 3 CTs

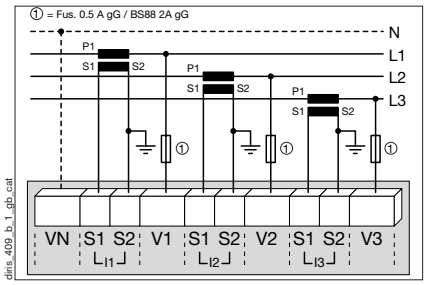

• 3 wires with 2 CTs

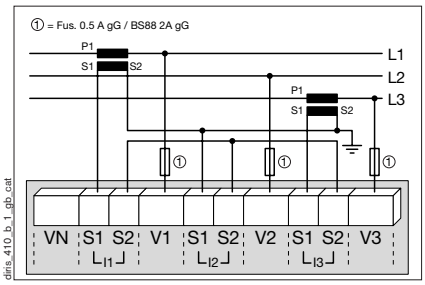

The use of 2 CTs reduces by 0.5 % the accuracy of the phase whose current is determined by vector calculation

• 3 wires with 2 CTs

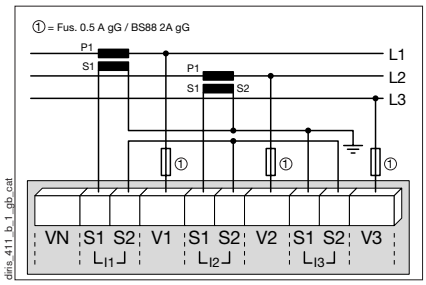

The use of 2 CTs reduces by 0.5 % the accuracy of the phase whose current is determined by vector calculation

Other informations

• Communication via RS485 link

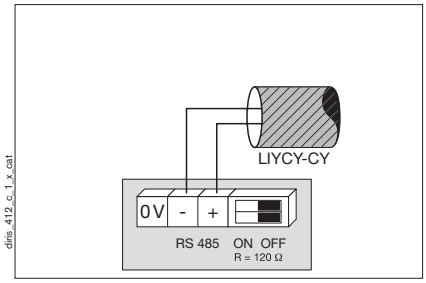

• Connection of voltage transformer for HV networks

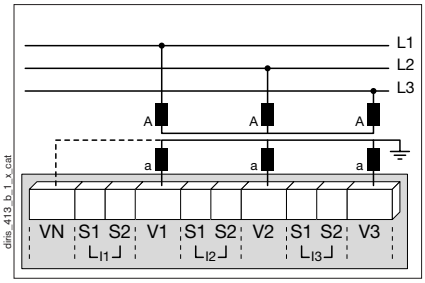

• AC & DC auxiliary power supply

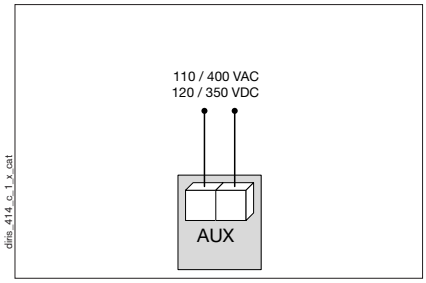

It is recommended that the auxiliary power supply be protected by the use of 500 mA gG or BS88 2 A gG fuses

This document is not a contract. SOCOMEC reserves the right to modify features without prior notice in view of continued improvement. 2008 - 2009

DIRIS A20

DIRIS A20

1. Backlit LCD display.
2. Direct access key for currents (instantaneous and max. values), current THD and set up wiring correction.
3. Direct access key for voltages, frequency and voltage THD.
4. Direct access key for active, reactive and apparent power (instantaneous and max. values) and power factor.
5. Direct access key for energies.

Functions

The **DIRIS A20** is a multi-function meter for measuring electrical values in all low voltage networks. All the parameters can be configured and displayed on its front panel and measuring and timing functions used.
In addition **DIRIS A20** has a function for correcting connection errors.

Conformity to standards

- IEC 62053-22 class 0.5 S
- IEC 62053-23 class 2
- IEC 61010-1
- IEC 61000-4-2
- IEC 61000-4-3
- IEC 61000-4-4
- IEC 61000-4-5
- IEC 61000-4-6
- IEC 61000-4-8
- IEC 61000-4-11
- IEC 60068-2-6
- IEC 60068-2-11
- IEC 60068-2-30
- UL 61010-1
- CSA C22.2 No. 61010-1

Applications

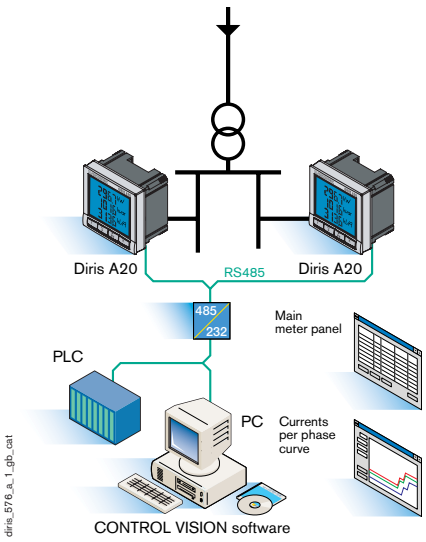

Using electrical parameters means using several analog or digital single-function products such as ammeters, voltmeters or wattmeters.
DIRIS A20, with its four direct access keys and LCD display, helps you use all the parameters in an LV installation.
These parameters can be centralized on a PC or PLC through an RS485 link using JBUS/MODBUS protocol®. The casing is designed so that the installer can easily fit the DIRIS A20 to the door of a cabinet. To facilitate and optimize the operator's work, the DIRIS A20 uses one of the most functional principles for integrating communications or metering. Simply fit a module to the rear of the casing to add a function.

Measurement in real effective values (TRMS) of:
- current per phase and neutral in instant,
- phase-to-neutral and phase-to-phase voltages,
- frequency,
- active positive power total in instant and maximum value over a programmable period,
- reactive positive power total in instant,
- apparent positive power total in instant,
- power Factor (PF) total with inductive or capacitive indication,
- harmonic distortion rate (THD) up to 31 on phase-to-neutral and phase-to-phase voltages and currents (THD 3U, THD 3V, THD 3I).

Energies meters
- Positive active energy meter.
- Positive reactive energy meter.

This document is not a contract. SOCOMEC reserves the right to modify features without prior notice in view of continued improvement. 2008 - 2009

References

Base unit	DIRIS A20
Auxiliary power supply U_s	References
110 … 400 VAC / 120 … 350 VDC (IEC) - 110 … 240 VAC / 120 … 250 VDC (UL/CSA)	4825 **0A20**
Options	
Plug-in modules	
Pulse outputs	4825 **0080**
RS485 JBUS / MODBUS® communication	4825 **0082**
Accessories	
IP65 protection cover (not UL/CSA)	4825 **0089**
Fitting kit for 144 x 96 mm cut out (not UL/CSA)	4825 **0088**

Plug-in modules

Pulse outputs

1 configurable pulse output (type, weight and duration).

RS485 JBUS / MODBUS® communication

RS485 link with JBUS / MODBUS ® protocol and transmission speed up to 38400 bauds.

Accessories

IP65 protection

Device fitted with 144 x 96 mm cut out plate

Overall dimensions

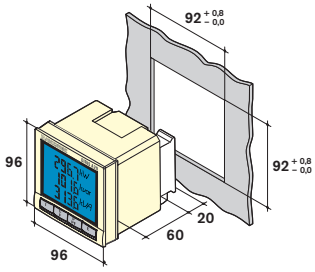

Type	panel mounting
Dimensions W x H x D	96 x 96 x 60 mm
Case protection rating	IP30
Front protection rating	IP52
Display type	LCD
Terminal block type	fixed and pull-out
Voltage and other connection section	0.2 … 2.5 mm²
Current connection section	0.5 … 6 mm²
Weight	400 g

This document is not a contract. SOCOMEC reserves the right to modify features without prior notice in view of continued improvement. 2008 - 2009

DIRIS A20

Electrical characteristics

Current measurement on insulated inputs (TRMS)

CT primary	9 999 A
CT secondary	5 A
Measurement range	0 … 11 kA
Input consumption	0.6 VA
Measurement updating period	1 s
Accuracy	0.2 %
Sustained overload	6 A
Intermittent overload	10 I_n for 1 s

Voltage measurement (TRMS)

Direct measurement between phases	50 … 500 VAC
Direct measurement between phase and neutral	28 … 289 VAC
Input consumption	≤ 0.1 VA
Measurement updating period	1 s
Accuracy	0.2 %
Sustained overload	800 VAC

Power measurement

Measurement updating period	1 s
Accuracy	0.5 %

Power factor measurement

Measurement updating period	1 s
Accuracy	0.5 %

Frequency measurement

Measurement range	45 … 65 Hz
Measurement updating period	1 s
Accuracy	0.1 %

Energy accuracy

Active (according to IEC 62053-22)	Class 0.5 S
Reactive (according to IEC 62053-23)	Class 2

Auxiliary power supply

AC voltage (IEC)	110 … 400 VAC
AC voltage (UL/CSA)	110 … 240 VAC
AC tolerance	± 10 %
DC voltage (IEC)	120 … 350 VDC
DC voltage (UL/CSA)	120 … 250 VDC
DC tolerance	± 20 %
Frequency	50 / 60 Hz
Consumption	10 VA

Outputs (pulsed)

Number of relays	1
Type	100 VDC - 0.5 A - 10 VA
Max. number of operations	≤ 10^8

Communication

Link	RS485
Type	2 ... 3 wires half duplex
Protocol	JBUS / MODBUS® in RTU mode
JBUS / MODBUS® speed	1400 … 38400 bauds

Operating conditions

Operating temperature	- 10 … + 55 °C
Storage temperature	- 20 … + 85 °C
Relative humidity	95 %

Terminals

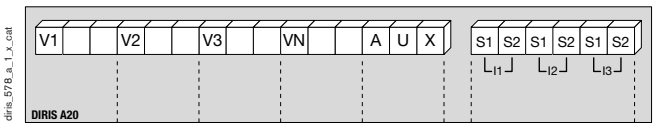

S1 - S2: current inputs
AUX: auxiliary power supply U_s
V1 - V2 - V3 - VN: voltage inputs

• **Communication module**

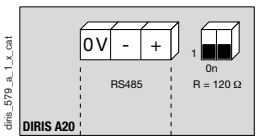

RS485 link
R = 120 Ω: internal resistance for the RS485 link

• **Metering module**

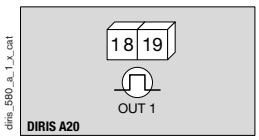

18 - 19: pulse output no. 1

This document is not a contract. SOCOMEC reserves the right to modify features without prior notice in view of continued improvement. 2008 - 2009

Connections

Recommendation

- For IT systems, it is recommended not to connect the CT secondary to earth.
- When disconnecting the DIRIS, the secondaries of each current transformer must be short-circuited. This operation can be carried out automatically with a product in the SOCOMEC catalogue, PTI (only available for 5 A secondary): please consult us.

Low voltage balanced network

• 3/4 wires with 1 CT

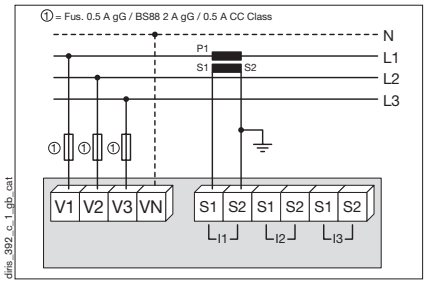

The use of 1 CT reduces by 0.5 % the accuracy of the phases whose current is determined by vector calculation

• Single phase

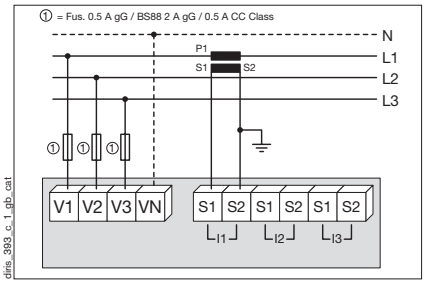

• Two phases

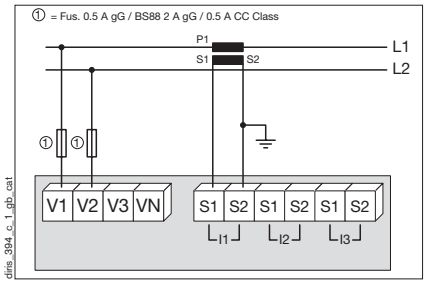

Low voltage unbalanced network

• 3/4 wires with 3 CTs

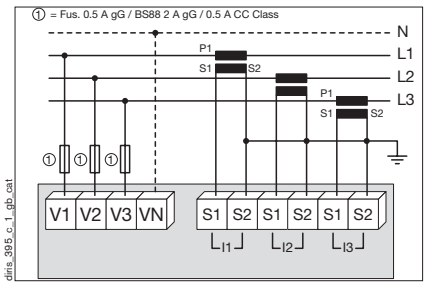

• 3 wires with 2 CTs

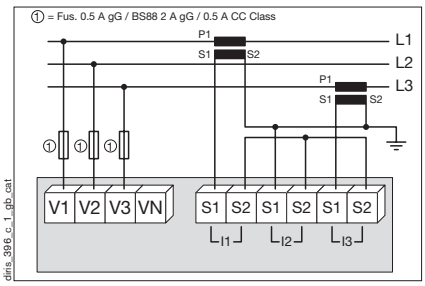

The use of 2 CTs reduces by 0.5 % the accuracy of the phase whose current is determined by vector calculation

• 3 wires with 2 CTs

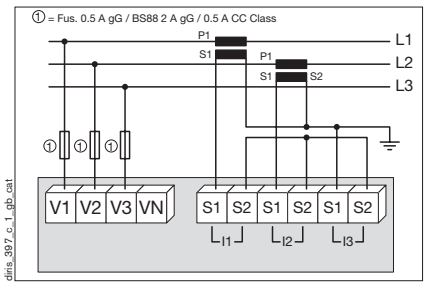

The use of 2 CTs reduces by 0.5 % the accuracy of the phase whose current is determined by vector calculation

Other information

• Communication via RS485 link

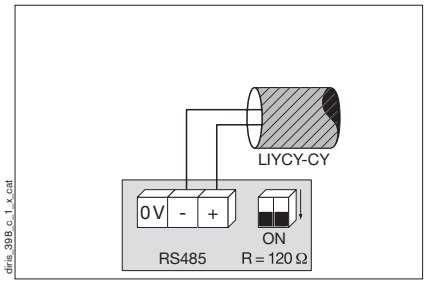

• AC & DC auxiliary power supply

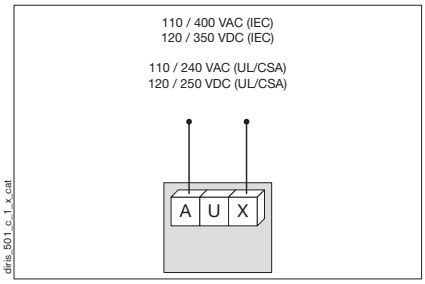

It is recommended that the auxiliary power supply be protected by the use of 500 mA gG, BS88 2A gG or 500 mA CC Class fuses

This document is not a contract. SOCOMEC reserves the right to modify features without prior notice in view of continued improvement. 2008 - 2009

DIRIS A40
DIRIS A41

diris_561_b_3_x_cat

DIRIS A40

1. Backlit LCD display.
2. Direct access key for currents and setup wiring correction.
3. Direct access key for voltages and frequency.
4. Direct access key for active, reactive, apparent power and power factor.
5. Direct access key for currents (maximal and average values) and power.
6. Direct access key for harmonics values.
7. Direct access key for energies and hour run meter.

Functions

DIRIS A40 and **A41** are multi-function meter for measuring the extent of electrical values for all LV/HV networks. They allow starting from the front panel to configure and display all the electric parameters and to exploit the functions of measurement, metering and energies management, harmonics analysis, remote control and control state of control devices, communication and detection of high voltages, peaks and voltage disconnections.
In addition, DIRIS A40 and A41 have a function for correcting connection errors.

Conformity to standards

- IEC 62053-22 class 0.5 S
- IEC 62053-23 class 2
- IEC 61010-1
- IEC 61000-4-2
- IEC 61000-4-3
- IEC 61000-4-4
- IEC 61000-4-5
- IEC 61000-4-6
- IEC 61000-4-8
- IEC 61000-4-11
- IEC 60068-2-6
- IEC 60068-2-11
- IEC 60068-2-30
- UL 61010-1
- CSA C22.2 No. 61010-1

Applications

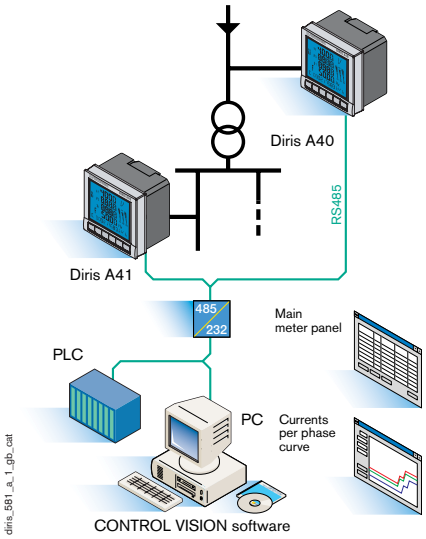

diris_581_a_1_gb_cat

Using electrical parameters means using several analogue or digital single-function products such as ammeters, voltmeters or wattmeters.

DIRIS A40 and **A41**, with their six direct access keys keyboard and LCD display, allow exploiting all the parameters of a LV and HV installation. These parameters may be centralized on a PC or an automaton through an RS485 link using JBUS/MODBUS® or PROFIBUS® DP protocol. The casing allows the installer easily fit DIRIS A40 or A41 panel board. To facilitate and optimize the operator's work, DIRIS A40 and A41 use one of the most functional principles for integrating communications, metering, harmonics, analog outputs or even alarm relays. Simply fit a module on the rear of the casing to add a function.

Measurement in real effective values (TRMS) of:

- currents per phase and instantaneous neutral, average and maximum values over a programmable period,
- phase-to-neutral and phase-to-phase voltages, instantaneous, average and maximum over a programmable period,
- frequency, instantaneous, average and maximum over a programmable period,
- active power on 4 quadrants (±) per phase and total in instantaneous, average and maximal values over a programmable period,
- reactive power on 4 quadrants (±) per phase and total in instantaneous, average and maximal values over a programmable period,
- apparent power per phase and total in instantaneous, average and maximal values over a programmable period,
- power Factor (PF) per phase and total with inductive or capacitive indication,
- harmonic distortion rate (THD) up to 51 on phase-to-neutral and phase-to-phase voltages and currents (THD 3U, THD 3V, THD 3I, THD In).

Metering

- Active power meter on 4 quadrants.
- Reactive power meter on 4 quadrants.
- Apparent power meter.
- Programmable hour run meter.

This document is not a contract. SOCOMEC reserves the right to modify features without prior notice in view of continued improvement. 2008 - 2009

Plug-in modules

DIRIS® A40

DIRIS® A41

Pulse outputs

2 pulse outputs able for configuration (type, weight and run) on ± kWh, ± kvarh and kVAh.

Pulse outputs and harmonics

2 pulse outputs able for configuration (type, weight and run) on ± kWh, ± kvarh and kVAh.
Spectral analysis of harmonics by range and by phase for 3I, In, 3V and 3U up to range 25.

RS485 JBUS / MODBUS® communication

RS485 link with JBUS / MODBUS® protocol (speed up to 38400 bauds).

RS485 PROFIBUS® DP communication

RS485 link with PROFIBUS® DP protocol (speed up to 1.5 Mbauds).

Analogue outputs

2 outputs able for configuration on 3I, In, 3V, 3U, F, ±ΣP, ±ΣQ, ΣS, ΣPFL/C and 30 VDC power supply.
2 modules may be connected at maximum, that is 4 analogue outputs.

2 inputs - 2 outputs

2 outputs assignable for the control of 3I, In, 3V, 3U, F, ±ΣP, ±ΣQ, ΣS, ΣPFL/C, THD 3I, THD In, THD 3V, THD 3U and of the hour meter (storing of the 3 last alarms) or to the remote control. 2 inputs for pulses metering. 3 modules may be connected at maximum, that is 6 inputs / outputs.

Memory

- Storing maximum over 62 days of P+, P-, Q+, Q- with an internal or external synchronisation TOP of 5, 8, 10, 15, 20, 30 and 60 minutes.
- Storing of 10 hour-dated last alarms.
- Storing of minimum and maximum instantaneous last values for 3U, 3V, 3I, In, F, ΣP±, ΣQ±, ΣS, THD 3U, THD 3V, THD 3I, THD In.
- Storing of 10 last hour-dated (EN 50160 and IEC 61000-4-30):
  - voltage dips,
  - over voltage,
  - voltage cut off.
- Storing of 3U, 3V and F average values based on synchronisation function (maximum 60 days).

Accessories

IP65 protection

Device fitted with 144 x 96 mm cut out plate

This document is not a contract. SOCOMEC reserves the right to modify features without prior notice in view of continued improvement. 2008 - 2009

DIRIS A40
DIRIS A41

References

diris_561_b_2_cat

Basic device	DIRIS A40	DIRIS A41 4CT inputs (not UL/CSA)
Auxiliary power supply U_s	References	References
110 … 400 VAC / 120 … 350 VDC (IEC) - 110 … 240 VAC / 120 … 250 VDC (UL/CSA)	4825 **0A40**	4825 **0A41**
12 … 48 VDC (not UL/CSA)	4825 **1A40**	4825 **1A41**
Optional plug & display modules		
Plug-in modules (1)		
Pulse outputs	4825 **0090**	4825 **0090**
Pulse outputs and harmonics	4825 **0091**	4825 **0091**
RS485 JBUS / MODBUS® communication	4825 **0092**	4825 **0092**
Analogue outputs	4825 **0093**	4825 **0093**
2 inputs - 2 outputs	4825 **0094**	4825 **0094**
RS485 PROFIBUS® DP communication	4825 **0096**	4825 **0096**
Memory	4825 **0097**	4825 **0097**
Accessories		
IP65 protection cover (not UL/CSA)	4825 **0089**	4825 **0089**
Fitting kit for 144 x 96 mm cut out (not UL/CSA)	4825 **0088**	4825 **0088**

(1) Ease of integration for additional functions (maximum 4 on A40 and 3 on A41) by clutchable modules on the rear of the device, by the user at any moment.

Terminals

• DIRIS A40

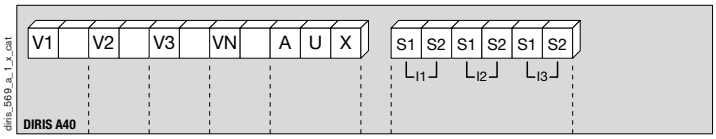

diris_569_a_1_x_cat

S1 - S2: current imputs
AUX: auxiliary power supply U_s
V1 - V2 - V3 - VN: voltage inputs

• DIRIS A41

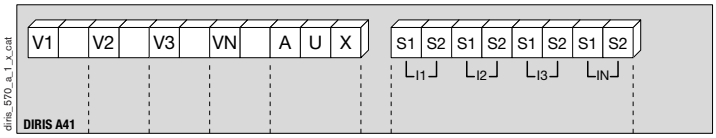

diris_570_a_1_x_cat

S1 - S2: current imputs
AUX: auxiliary power supply U_s
V1 - V2 - V3 - VN: voltage inputs

• Communication module

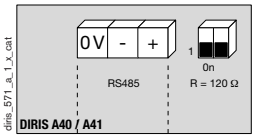

diris_571_a_1_x_cat

RS485 link
R = 120 Ω: internal resistance for the RS485 link

• Pulse output module

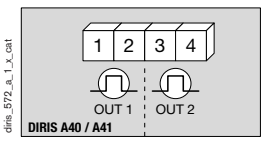

diris_572_a_1_x_cat

1 - 2: pulse output no. 1
3 - 4: pulse output no. 2

• Analogue output module

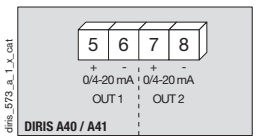

diris_573_a_1_x_cat

5 - 6: analogue output no. 1
7 - 8: analogue output no. 2

• 2 inputs / 2 outputs module

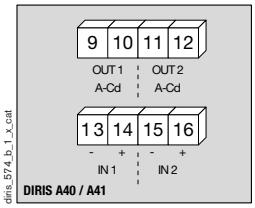

diris_574_b_1_x_cat

9 - 10: relay output no. 1
11 - 12: relay output no. 2
13 - 14: opto input no. 1
15 - 16: opto input no. 2

• Memory module

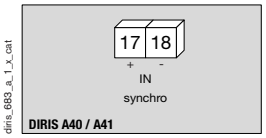

diris_683_a_1_x_cat

17 - 18: synchronisation input

This document is not a contract. SOCOMEC reserves the right to modify features without prior notice in view of continued improvement. 2008 - 2009

Electrical characteristics

Current measurement on insulated inputs (TRMS)

CT primary	10 000 A
CT secondary	1 and 5
Measurement range	0 … 11 kA
Input consumption	≤ 0.1 VA
Measurement updating period	1 s
Accuracy	0.2 %
Sustained overload	6 A
Intermittent overload	10 I_n for 1 s

Voltage measurement (TRMS)

Direct measurement between phases (IEC)	18 … 700 VAC
Direct measurement between phases (UL/CSA)	50 … 500 VAC
Direct measurement between phase and neutral (IEC)	11 … 404 VAC
Direct measurement between phase and neutral (UL/CSA)	28 … 288 VAC
VT primary	500 000 VAC
VT secondary	60, 100, 110, 173, 190 VAC
Frequency	50 / 60 Hz
Input consumption	≤ 0.1 VA
Measurement updating period	1 s
Accuracy	0.2 %
Sustained overload	760 VAC

Current-voltage product

Limitation for 1A CT	10 000 000
Limitation for 5A CT	10 000 000

Power measurement

Measurement updating period	1 s
Accuracy	0.5 %

Power factor measurement

Measurement updating period	1 s
Accuracy	0.5 %

Frequency measurement

Measurement range	45 … 65 Hz
Measurement updating period	1 s
Accuracy	0.1 %

Energy accuracy

Active (according to IEC 62053-22)	Class 0.5 S
Reactive (according to IEC 62053-23)	Class 2

Auxiliary power supply

AC voltage (IEC)	110 … 400 VAC
AC voltage (UL/CSA)	110 … 240 VAC
AC tolerance	± 10 %
DC voltage (IEC)	120 … 350 VDC / 12 … 48 VDC
DC voltage (UL/CSA)	120 … 250 VDC
DC tolerance	± 20 % / - 6 … + 20 %
Frequency	50 / 60 Hz
Consumption	≤ 10 VA

Inputs

Number	2 … 6
Power supply	10 … 30 VDC
Minimum signal width	10 ms
Minimum length between 2 impulses	18 ms
Type	phototransistor

Outputs (alarms / control)

Number of relays	2 ... 6
Type	230 VAC - 5 A - 1150 VA

Outputs (pulsed)

Number of relays	2
Type	100 VDC - 0,5 A - 10 VA
Max. number of operations	≤ 10^8

Outputs (analogue)

Number of outputs	2 … 4
Type	isolated
Range	0 / 4 … 20 mA
Charging resistance	600 Ω
Maximum current	30 mA

Communication

Link	RS485
Type	2 ... 3 wires half duplex
Protocol	JBUS/MODBUS® in RTU mode
JBUS / MODBUS® speed	1400 … 38400 bauds
Protocol	PROFIBUS® DP
PROFIBUS® DP speed	9.8 kbauds … 1.5 Mbauds

Operating conditions

Operating temperature	- 10 … + 55 °C
Storage temperature	- 20 … + 85 °C
Relative humidity	95 %

This document is not a contract. SOCOMEC reserves the right to modify features without prior notice in view of continued improvement. 2008 - 2009

DIRIS A40
DIRIS A41

Overall dimensions

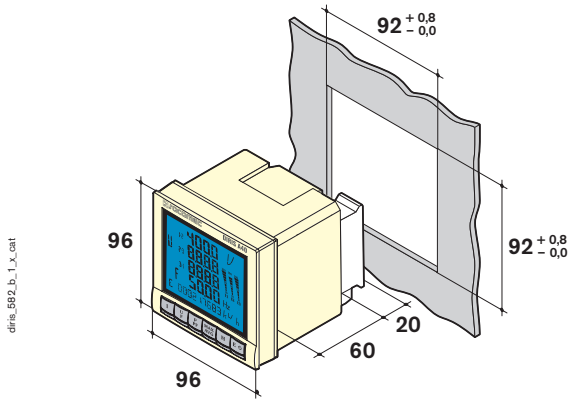

Type	panel mounting
Dimensions W x H x D	96 x 96 x 60 mm
Case protection rating	IP30
Front protection rating	IP52
Display type	LCD
Terminal block type	fixed or pull-out
Voltage and other connection section	0.2 … 2.5 mm²
Current connection section	0.5 … 6 mm²
Weight	400 g

Connections

Recommendation: when disconnecting the DIRIS, the secondaries of each current transformer must be short-circuited.
This operation can be carried out automatically from a product in the SOCOMEC catalogue, PTI, please consult us.

▶ *Low voltage balanced network for DIRIS A40*

• 3/4 wires with 1 CT

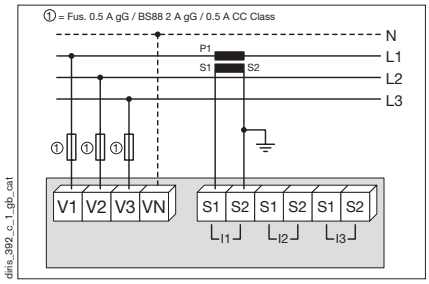

The use of 1 CT reduces by 0.5 % the accuracy of the phase whose current is determined by vector calculation

• Single phase

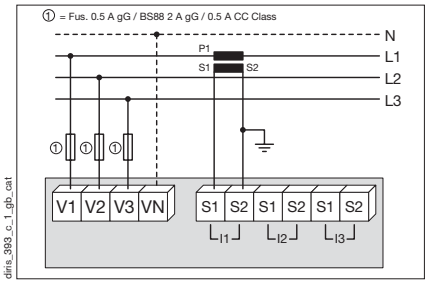

• Two phases

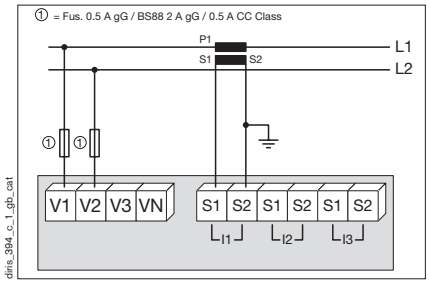

▶ *Low voltage unbalanced network for DIRIS A40*

• 3/4 wires with 3 CTs

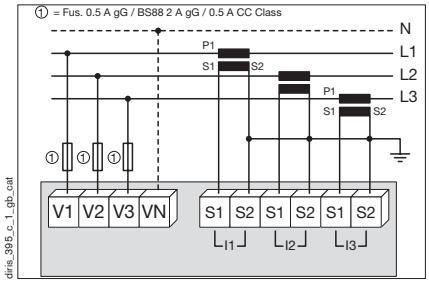

• 3 wires with 2 CTs

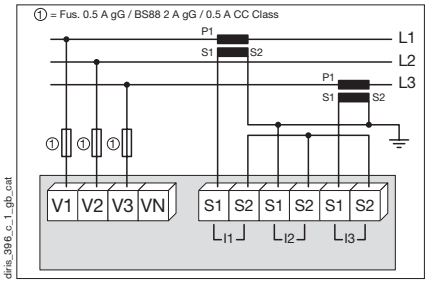

The use of 2 CTs reduces by 0.5 % the accuracy of the phase whose current is determined by vector calculation

• 3 wires with 2 CTs

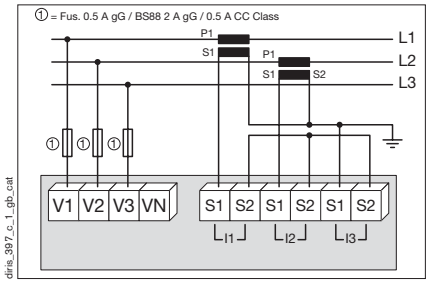

The use of 2 CTs reduces by 0.5 % the accuracy of the phase whose current is determined by vector calculation

This document is not a contract. SOCOMEC reserves the right to modify features without prior notice in view of continued improvement. 2008 - 2009

Connections

Low voltage unbalanced network for DIRIS A41

- **4 wires with 4 CTs**

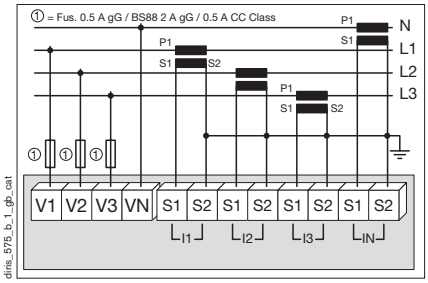

Other information

- **Communication via RS485 link**

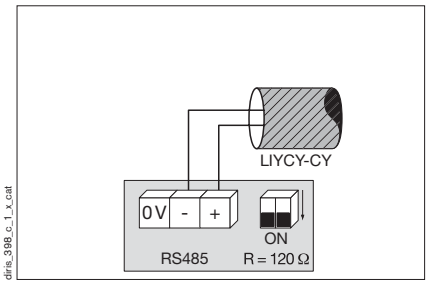

- **Voltage transformer connection for HV networks**

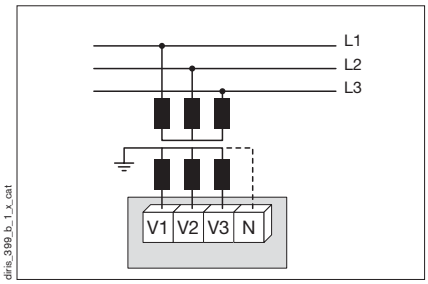

- **AC & DC auxiliary power supply**

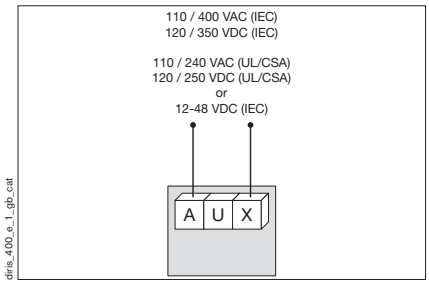

It is recommended that the auxiliary power supply be protected by the use of 500 mA gG, BS88 2A gG or 500 mA CC Class fuses

This document is not a contract. SOCOMEC reserves the right to modify features without prior notice in view of continued improvement. 2008 - 2009

Communication interfaces

Connecting the RS485 link

RS232 / RS485 interface

inter_043_a

Function

If the PC is equipped with an RS232 port, the interface will convert RS232 signal into RS485. 31 devices can be connected to the interface over a distance of 1200 m at 9600 bauds.

Reference

Auxiliary power supply U_s	Frequency	Reference
95 ... 240 VAC / 110 ... 250 VDC	50 Hz	4899 **0100**

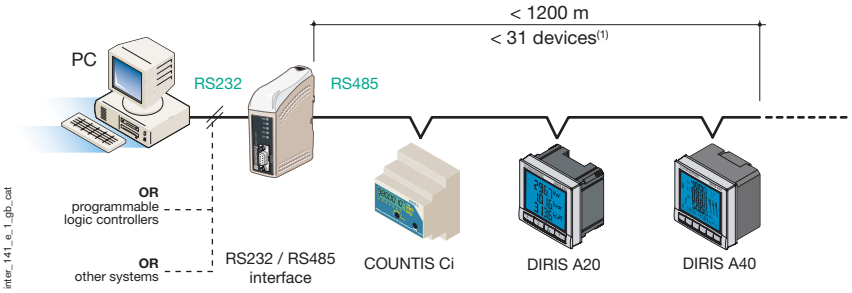

inter_141_a_1_gb_cat

(1) Beyond these characteristics, use an « RS422 / RS485 repeater».

USB / RS485 interface

inter_002_a

Function

If the PC is not equipped with a serial port, the interface will connect via the USB port to obtain an RS485 communication port.

Recommended for local use and not for permanent installation.

Reference

	Reference
External casing USB of RS485 interface	4899 **0110**

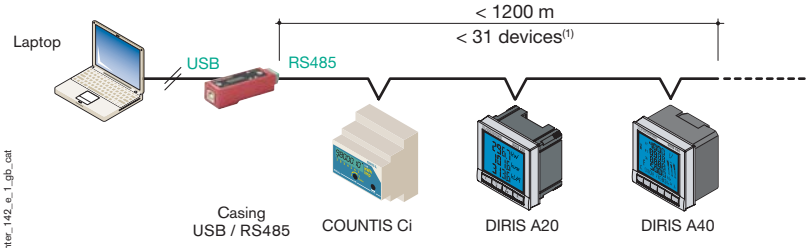

inter_142_a_1_gb_cat

(1) Beyond these characteristics, use an « RS422 / RS485 repeater».

RS422 / RS485 repeater

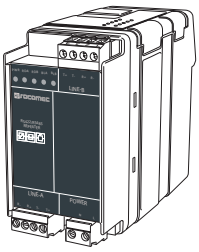

inter_011_a

Function

In some applications the maximum distance and/or the maximum number of devices can be exceeded. One solution to this technical restriction is to install an interface which amplifies the signal over a further 1200 m (at 9600 bauds) for 31 devices.

Moreover, it allows you to create a new branch on the network. This means it is possible to reduce the length of cable required to connect the devices by avoiding back and forth cabling.

Reference

Auxiliary power supply U_s	Frequency	Reference
95 ... 240 VAC / 110 ... 250 VDC	50 Hz	4899 **0120**

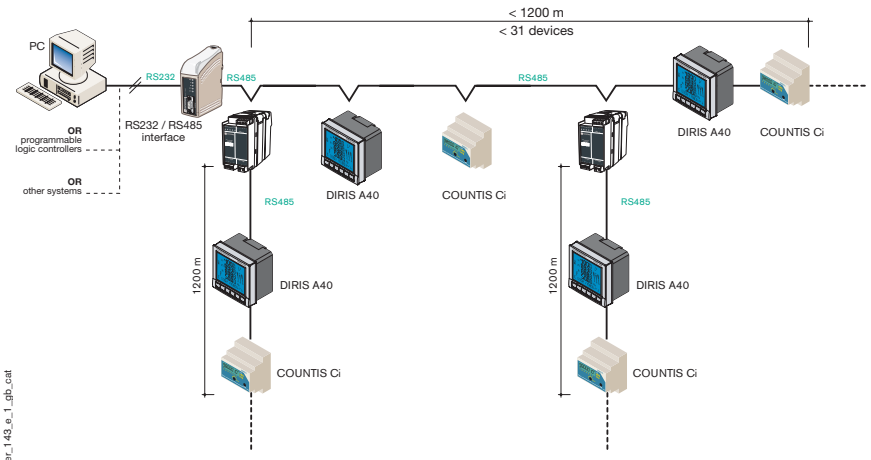

inter_143_a_1_gb_cat

This document is not a contract. SOCOMEC reserves the right to modify features without prior notice in view of continued improvement. 2008 - 2009

Using the telephone network

RTC / RS232-RS485 modem

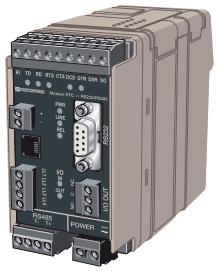

inter_014_a

References

Auxiliary power supply U_s	Frequency	Reference
22 ... 240 VAC / 12 ... 48 VDC	50 Hz	4899 **0200**

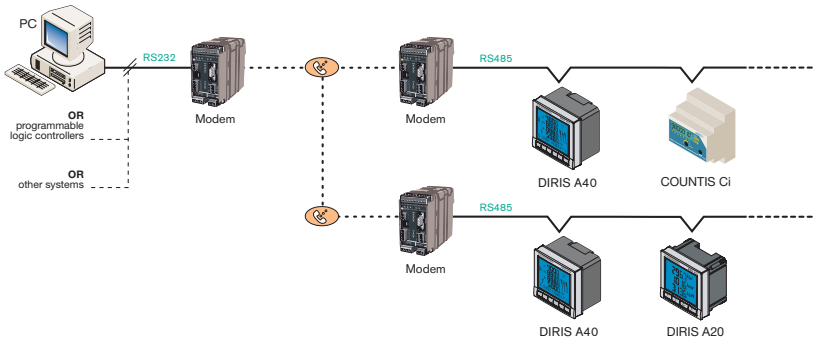

inter_144_d_1_gb_cat

Function

On some sites, it is impossible to connect all the DIRIS's using a single cable. Indeed, the distances may be such that the investment would be too costly. In this case, a modem may be used.

This modem can be configured as a master (RS232: connected directly to PC) or slave (RS485: connected to slave devices, via network).

Using the Ethernet network

Ethernet / RS232-RS485 interface

inter_057_a

References

Auxiliary power supply U_s	Frequency	Reference
230 VAC / 12 ... 48 VDC	50 Hz	4899 **0300**

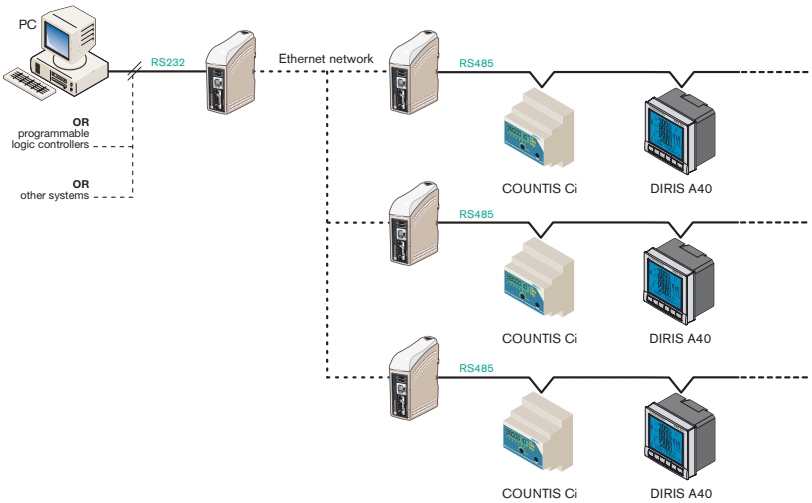

inter_145_d_1_gb_cat

Function

These interfaces allow the connection onto an Ethernet network with the master on one side and the RS485 slave network on the other side.

This interface can be configured as a master (RS232: connected directly to PC) or slave (RS485: connected to slave devices, via network).

This document is not a contract. SOCOMEC reserves the right to modify features without prior notice in view of continued improvement. 2008 - 2009

DIRIS VISION software

couv_109_a_1_cat

Functions

DIRIS VISION is a visualisation software for the parameters displayed by DIRIS A20, A40, A41, Ap and Am.

It operates in a Windows® environment 98, NT4 (pack 6), Millenium, 2000 or XP with a minimum micro-computer configuration requirement of: Pentium® II, 64 Mb RAM, 200 Mb of available hard disk space, one or more (RS232 or RS485) series ports, or USB, a 17" VGA 1024 x 768 screen.

General characteristics

The DIRIS VISION software allows you to visualise:
- all of the electrical measurements instantaneously,
- alarms,
- harmonics in instantaneous,
- energies and the indices (DIRIS A inputs).

Allows you to export to EXCEL, for each DIRIS, the historical table:
- immediate measurements,
- of the energies and the index,
- the harmonics.

The visualisation of the immediate device values can be in an analogue or digital format.

The **DIRIS VISION** software is available in a multilingual version with the following languages:
- english,
- french,
- german,
- italian.

Applications

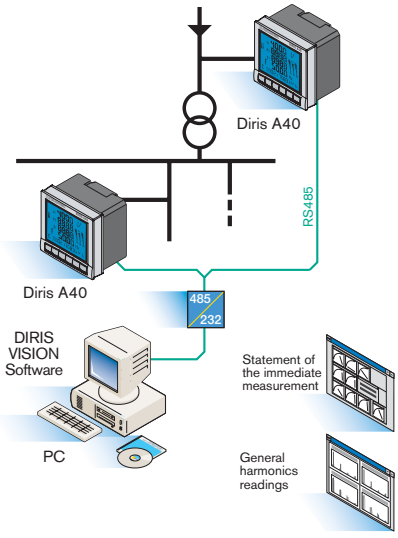

diris_553_b_1_gb_cat

DIRIS VISION offers the possibility of displaying all the electrical quantities measured, reading the energy consumptions of a production line or a furnace.

The user will also be able to create with EXCEL a history of electrical measurements.

All these functions can be carried out in relation to a DIRIS (corresponding to one feeder).

The standard communication protocol used by SOCOMEC allows the deployment of the products on the distribution network to be facilitated over time. A first stage consists necessarily of installing a cable suited to the RS485, and even the allocation of available pairs in an existing cable. The ease of integration and modification of the number of products on this RS485 link makes this a long-lasting solution.

This document is not a contract. SOCOMEC reserves the right to modify features without prior notice in view of continued improvement. 2008 - 2009

picto_108_a_gb

Services +
> Audit
> Setting up
> Training
See page IV

diris_559_a_1_cat

Reference

Type	Reference
DIRIS VISION software	4806 **0000**

DIRIS VISION software

Specification

Analogue statement of the instantaneous measurement

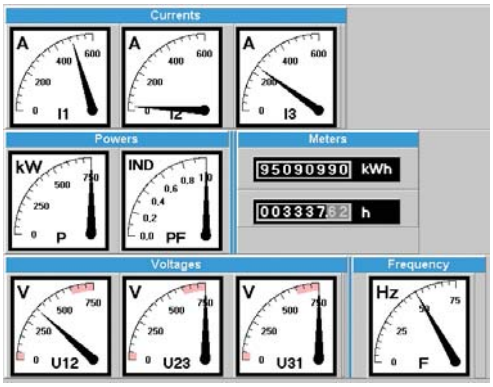

diris_550_a_1_cat

Instantaneous analogue display visualisation, for each device, of:
- current by phase,
- voltage by phase,
- frequency,
- total active power,
- total power factor,
- active energy,
- hour metering.

These screens can be exported manually to EXCEL.

Digital statement of the instantaneous measurement

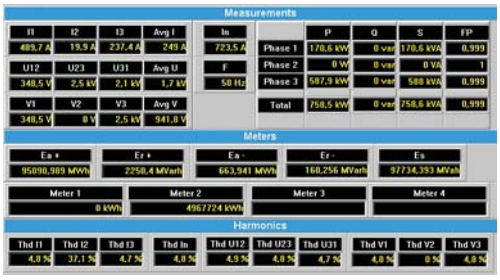

diris_549_a_1_cat

Instantaneous digital display visualisation, for each device, of:
- current by phase,
- average of the 3-phase currents,
- voltages (U, V) by phase,
- average of the 3-phase voltages (U, V),
- frequency,
- power (active, reactive and apparent) by phase and total,
- power factor by phase and total,
- energy (active +/-, reactive +/- and apparent +/-),
- impulse metering inputs (DIRIS A),
- THD currents and voltages by phase (DIRIS A40 and A41).

These screens can be exported manually to EXCEL.

General harmonics readings

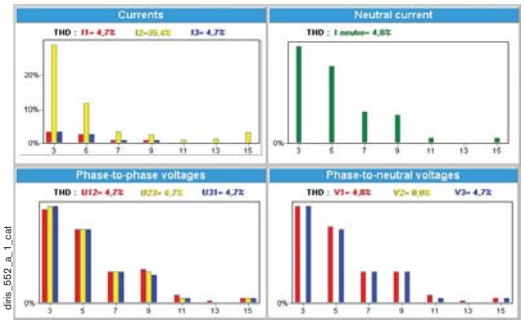

diris_552_a_1_cat

Instantaneous spectral form visualisation of harmonics from rows 3 to 15 for phase currents and voltages.

These screens can be exported manually to EXCEL.

General reading of the DIRIS measurements

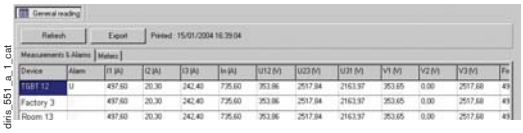
diris_551_a_1_cat

Displaying of the general readings of all DIRIS present on the network:
- reading of immediate measurements and alarms (DIRIS A40 and A41),
- THD currents and voltages per phase,
- reading of the energy meters (active, reactive and apparent) and impulse meter input index (DIRIS A40 and A41).

These screens can be exported manually to EXCEL.

This document is not a contract. SOCOMEC reserves the right to modify features without prior notice in view of continued improvement. 2008 - 2009

CONTROL VISION software

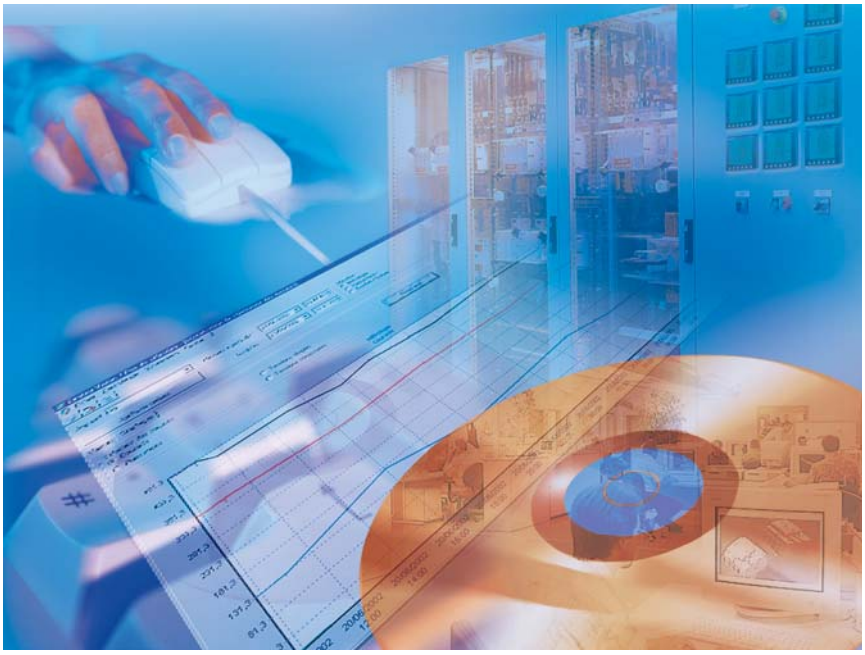

diris_488_a_1_cat

Functions

CONTROL VISION is an metering and monitoring software for DIRIS A20, A40, A41, Am, Ap, M, Mh, C, CC, CM, CMv2 and COUNTIS Ci devices. It operates under a Windows® NT4 (pack 6) or XP environment with a minimal PC requirement: Pentium® III, 512 Mb RAM, 500 Mb of available hard disk space, one or more (RS232 or RS485) series ports, or USB, a 17" VGA 1024x768 screen and **a network card with TCP/IP Protocol**.
Access limited by user password.

General characteristics

The CONTROL VISION software allows:
- remoting configuration of DIRIS and COUNTIS devices,
- displaying all electrical parameters measured, energies, indices, alarms, harmonics and the configuration of all the devices,
- creating readings, backups and automatic print-outs,
- displaying, for DIRIS CM/CMv2 and COUNTIS Ci inputs:
  - table of min. 10P,
  - corresponding load curve.
- displaying historical data for each DIRIS in tabular or graphical format:
  - instantaneous measurements,
  - harmonics,
  - status changing of inputs / outputs.

The CONTROL VISION software is available in a multilingual version comprising the following languages:
- english,
- french,
- german,
- italian,
- spanish.

Applications

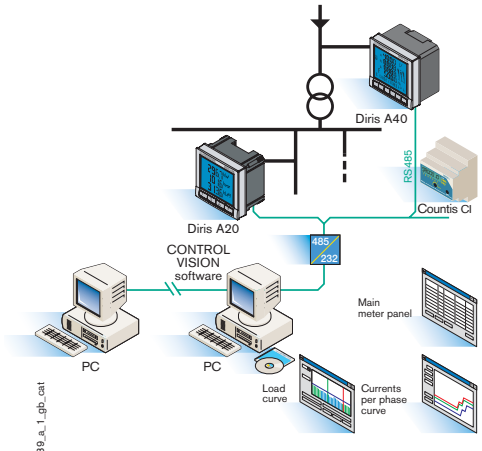

diris_689_a_1_gb_cat

The CONTROL VISION software is designed to communicate with all devices in the installation and create logs based on manual and automatic scanning.
CONTROL VISION will display all the electrical values measured and read the total energy consumption. The user can also create logs of several electrical values over a selected time period.
All functions are available whether a single or multiple DIRIS are installed.
User will also be able to change the configuration of each device on the network.

The standard communication protocol used by SOCOMEC allows the deployment of the products on the distribution network to be facilitated over time. A first stage consists necessarily of installing a cable suited to the RS485, and even the allocation of available pairs in an existing cable. The ease of integration and modification of the number of products on this RS485 link makes this a long-lasting solution.

This document is not a contract. SOCOMEC reserves the right to modify features without prior notice in view of continued improvement. 2008 - 2009

picto_108_a_gb

Services +
> Audit
> Setting up
> Training
See page IV

diris_488_a_2_cat

CONTROL VISION software

References

Type	References
CONTROL VISION software	4805 **0000**
CONTROL VISION software + INTRANET option (Multi user)	4805 **0001**

▶ *Specification*

Instantaneous measurement display

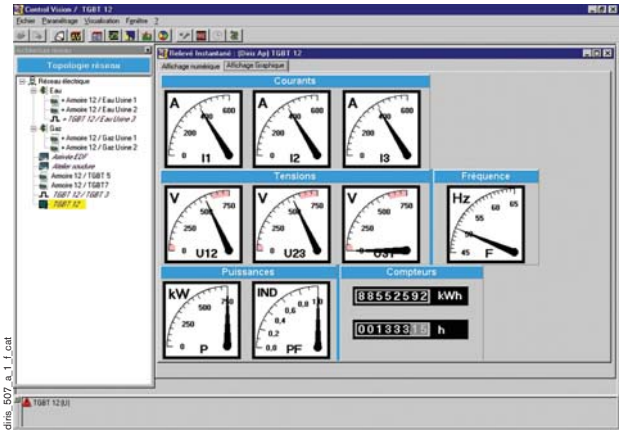

diris_507_a_1_f_cat

Displaying, either numerical values or a graphical representation:
- currents,
- Ph-Ph voltages,
- powers,
- frequency,
- active energy and time meter (according to DIRIS) of the selected DIRIS.

Alarm levels (programmed in the device) are indicated in red.
The parameters to be displayed can be customised.
All screens are refreshed automatically.

General reading of measurements

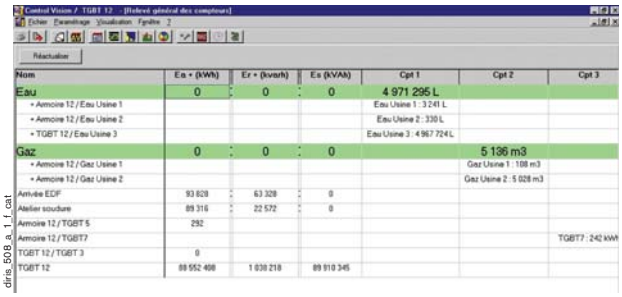

diris_508_a_1_f_cat

Energy consumption table or metered pulses of all the DIRIS / COUNTIS Ci present on the network.
Readings include, the active positive and negative energy (kWh), the positive and negative reactive energy, the apparent energy (kVAh) and the pulses metered by the devices' TOR inputs. These pulses can be displayed by (name, weight and units).
These values can also be grouped together by type (Electricity, Water, Gas...).
Printing and Exporting to Excel file can be automated (e.g. one file per day edited at a fixed time).
Screen data can be printed and extracted manually at any time.

Monthly general reading of COUNTIS Ci

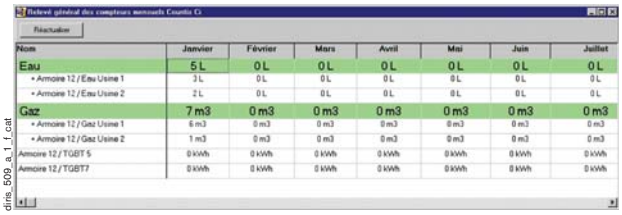

diris_509_a_1_f_cat

Monthly meter readings of all COUNTIS Ci present on the network.
COUNTIS Ci memorises monthly consumption (energy or pulse) via one of 7 inputs, the software retrieves the values and allocates into the allocated "group".
Screen data can be printed and extracted manually at any time.

This document is not a contract. SOCOMEC reserves the right to modify features without prior notice in view of continued improvement. 2008 - 2009

CONTROL VISION software

Specification

Configuration of the devices

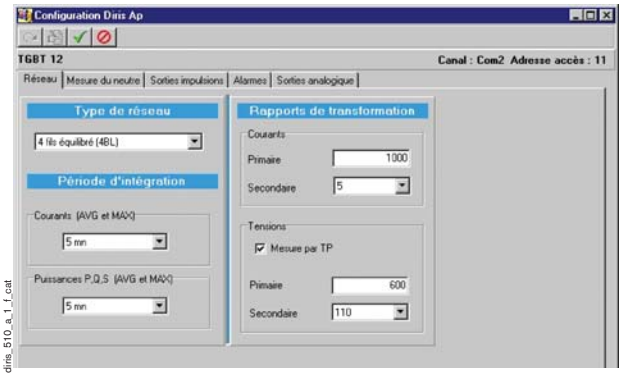

diris_510_a_1_f_cat

It is possible to display and configure the parameters of the devices on the network. DIRIS / COUNTIS.

This is a single screen with changes made via password protection.

Parameters displayed include:

- type of network,
- TC and TP ratio,
- weight of pulse outputs,
- levels and assignment of the alarms,
- assignment of the 4/20 mA outputs and parameters,
- assignment and weight of the TOR inputs.

Managing the database (DMT)

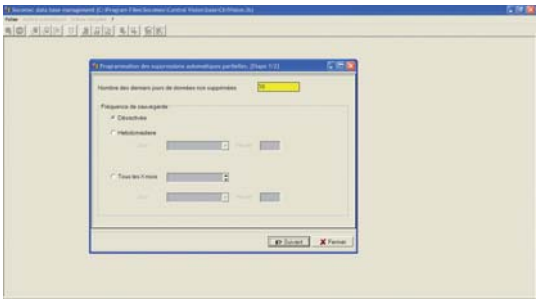

diris_727_a_1_cat

The DMT software (supplied with CONTROL VISION) is a database management tool. It helps ensure by automatic or manual action (complete or partial database backup and partial database deletion), thereby providing a database suitable for the efficient operation of CONTROL VISION.

General reading of the instantaneous measurement

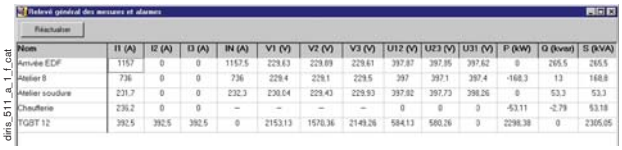

Nom	I1 (A)	I2 (A)	I3 (A)	IN (A)	V1 (V)	V2 (V)	V3 (V)	U12 (V)	U23 (V)	U31 (V)	P (kW)	Q (kvar)	S (kVA)
Arrivée EDF	1157	0	0	1157.5	229.63	229.69	229.61	397.87	397.95	397.62	0	265.5	265.5
Atelier 8	736	0	0	736	229.4	229.1	229.5	397	397.1	397.4	-168.3	13	168.8
Atelier soudure	231.7	0	0	232.3	230.04	229.43	229.93	397.82	397.73	398.26	0	53.3	53.3
Chaufferie	236.2	0	0	–	–	–	–	0	0	0	-53.11	-2.79	53.18
TGBT 12	392.5	392.5	392.5	0	2153.13	1570.36	2149.26	584.13	580.26	0	2298.38	0	2305.05

diris_511_a_1_f_cat

Displayed in numerical format:

- currents,
- voltages,
- powers,
- frequency,
- power factor,
- electrical value in the alarm.

Screen data can be printed and extracted manually at any time.

History of device measurements

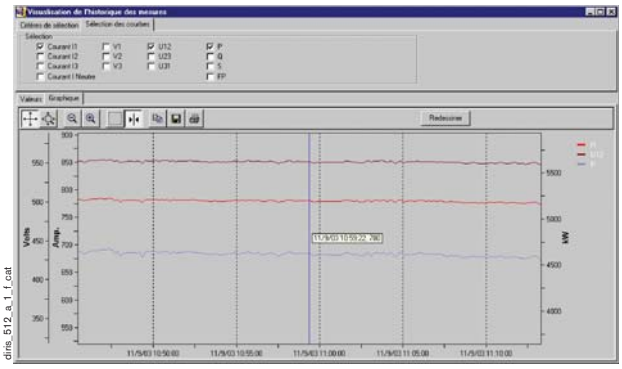

diris_512_a_1_f_cat

CONTROL VISION records the electrical parameters of the devices defined under “permanent scanning” into a central database.

The scale of the graphical display can be selected and specific areas enlarged.

Placing the cursor over the record displays the exact value at the selected point.

All colours can be customized to complement the Windows environment.

Screen data can be printed and extracted manually at any time.

This document is not a contract. SOCOMEC reserves the right to modify features without prior notice in view of continued improvement. 2008 - 2009

Specification

General harmonics readings

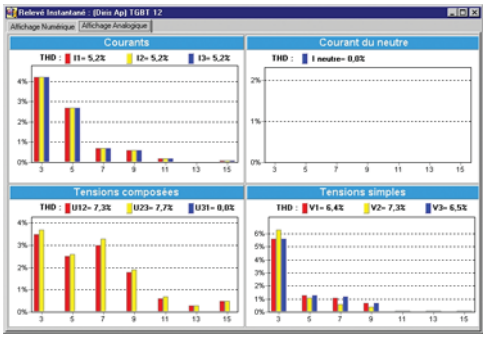

diris_513_a_1_f_cat

A bargraph display for the harmonics readings of a selected device (option on DIRIS A) row by row for:
- the 3 currents and neutral (on the basis of the network type),
- the simple and Ph-Ph and Ph-N voltages (on the basis of the network type).

All colours can be customized to complement the Windows environment.
Screens are refreshed automatically.

Measurement curve

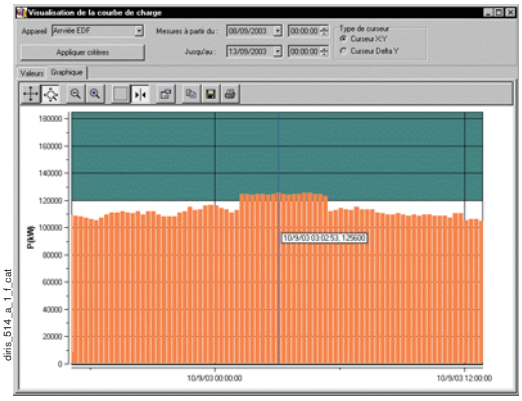

diris_514_a_1_f_cat

The load curve is a display for the network load over a selected time period.
DIRIS CM / CMv2 (DIRIS A40 fitted with memory module) and COUNTIS Ci (via 4 inputs) records the average values for a period (for example, 10 minutes);
CONTROL VISION regularly retrieves and records the results in the database in order to format the load data in a table of all devices within CONTROL VISION.
The clear part of the table gives the average load value (10 minutes in example shown) and the dark part is the load value over agreed supply quota. This data can be used to verify the period over agreed supply quota.
Placing the cursor over the record displays the exact value at the selected point.
All colours can be customized to complement the Windows environment.
Screen data can be printed and extracted manually at any time.

Power distribution

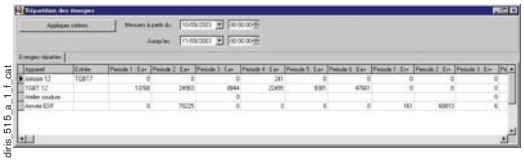

diris_515_a_1_f_cat

Display of the active and reactive energy consumption by period and by device
Each period is defined by a name, starting and ending time.
The concerned devices are those configured in CONTROL VISION.
Screen data can be printed and extracted manually at any time.

Quality

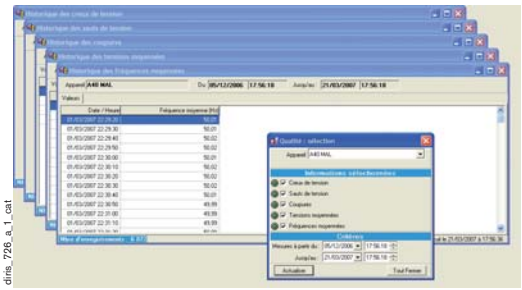

diris_726_a_1_cat

Allows display of events (voltage dips, voltage cut-offs, power cuts, average voltage, average frequencies) in table form.
Installation of a memory module required.

This document is not a contract. SOCOMEC reserves the right to modify features without prior notice in view of continued improvement. 2008 - 2009

BILLING APPLICATION software

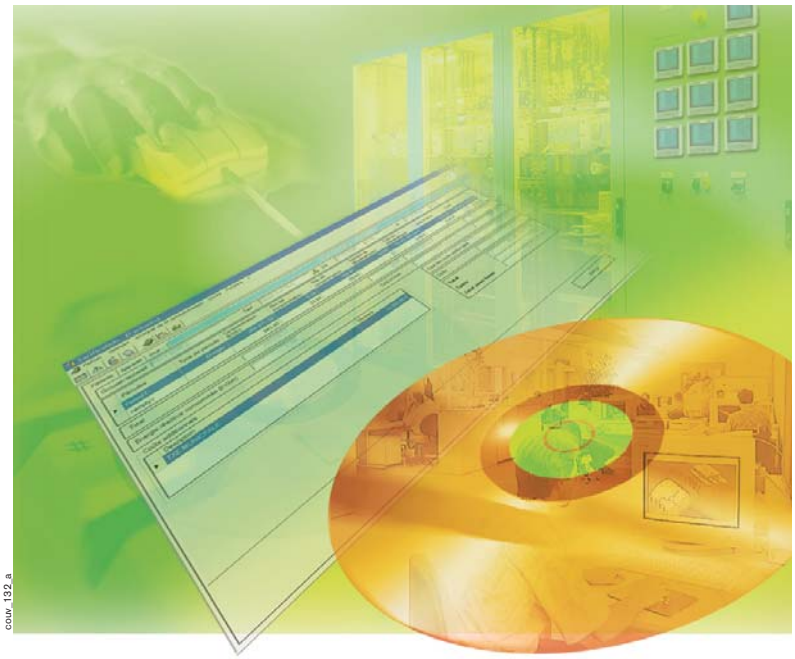

cour_132_a

Functions

BILLING APPLICATION is a power consumption management software related to tariffs. It allows pricing simulation for agreed supply quota optimisation.

CONTROL VISION is required under a Windows® NT4 or XP environment with a minimal PC requirement: Pentium® III, 512 Mb RAM, 500 Mb of available hard disk space, one or more (RS232 or RS485) series ports, or USB, a 17" VGA 1024 x 768 screen and **a network card with TCP/IP Protocol**.

Access limited by user password.

General characteristics

BILLING APPLICATION allows:
- calendar management (bank holidays...),
- price creation (periods, cost, fixed premium,...),
- pricing calculation management,
- device group creation,
- bill edition according to period and consumer,
- load curves visualisation,
- consumption comparison.

The BILLING APPLICATION software is available in a multilingual version comprising the following languages:
- english,
- french,
- german,
- italian,
- spanish.

Applications

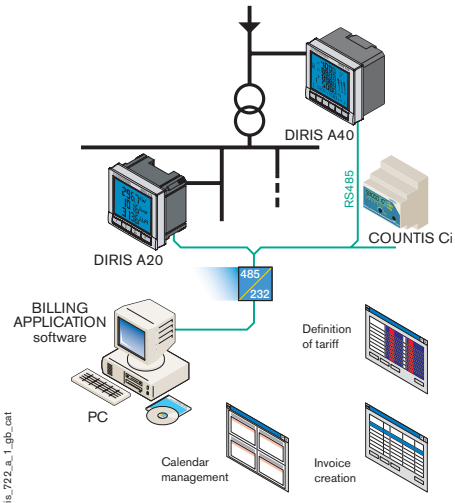

diris_722_a_1_gb_cat

BILLING APPLICATION allows internal billing or pricing simulation to define needs thanks to the information provided from COUNTIS CI, DIRIS CMv2 or DIRIS A40 (fitted with memory module).

It offers the possibility for consumption optimisation of a production line enabling consumption allocation on manufactured parts.

User can also share power consumption among the different departments in a company or hospital.

User is able to define (thanks to load curves) appropriate pricing to reduce power bill.

This document is not a contract. SOCOMEC reserves the right to modify features without prior notice in view of continued improvement. 2008 - 2009

References

couv_132_a_1_cat

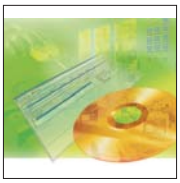

BILLING APPLICATION software

Type	Reference
BILLING APPLICATION software	4805 **0002**

▶ *Specification*

Definition of tariff

diris_723_a_1_cat

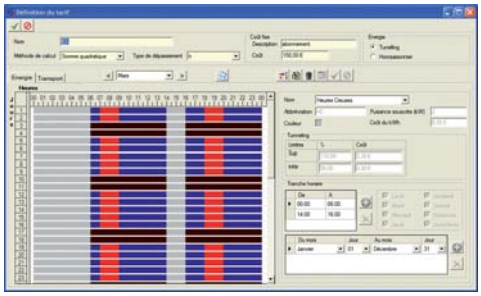

Tariff definition window for power consumption and transmission:
- KWh price definition,
- tariff name,
- calculation method,
- type of overrun,
- additional fixed costs (subscription, service...),
- consumption and transmission periods list,
- seasonal or tunnelling use.

Invoice creation

diris_724_a_1_cat

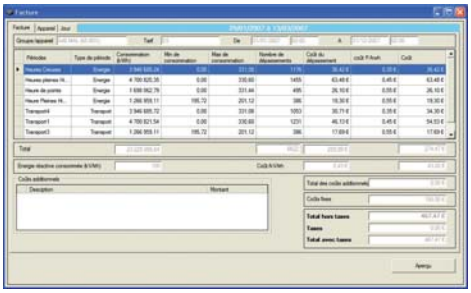

Print an invoice or export data into EXCEL for one device or a group of products.
Software enables user to select tariff and billing period.

diris_728_a_1_cat

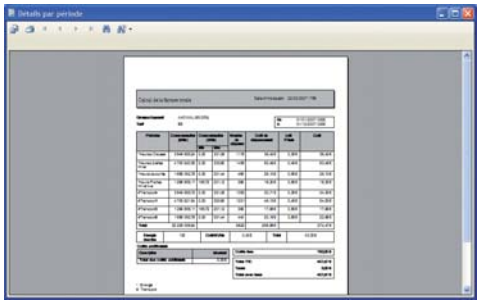

Comparison of 2 load curves

diris_725_a_1_cat

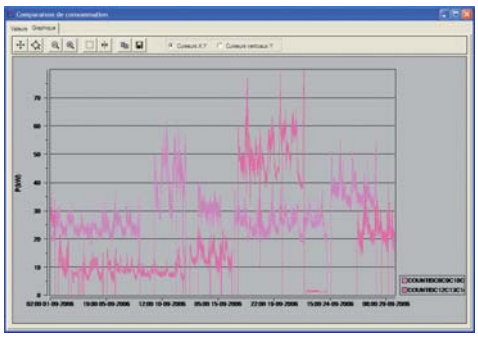

Visualisation of several devices or device groups for defined period.
Table form or curve display.

This document is not a contract. SOCOMEC reserves the right to modify features without prior notice in view of continued improvement. 2008 - 2009

SELECTION GUIDE

EARTH LEAKAGE RELAYS

APPLICATIONS

Monitoring and protection	RESYS B 420	RESYS B 470	RESYS B 471
Of final circuits (motors…)			
Of general distribution(1)			
Of circuits with inverters(2)	●	●	●
Of premises where there is a risk of fire	●	●	●
Of DC circuits	●	●	●

(1) Cable lead-outs from cubicles, enclosures…
(2) Variable speed drives, rectifiers…

CHARACTERISTICS

	RESYS B 420	RESYS B 470	RESYS B 471
TRIP LEVEL			
Adjustment	10 to 500 mA	0.03 to 3 A	0.1 to 3 A
TIME DELAY			
Adjustment	0 to 10 s	0 to 10 s	0 to 10 s
PRE-ALARM			
By LED and relay	•	•	•
MONITORING OF RESIDUAL CURRENTS*			
Sinusoidal type (Type AC ~)	•	•	•
Pulsating type (Type A)	•	•	•
DC type (Type B)	•	•	•
SWITCH BODY			
Modular	•	•	•
Flush-type (48 x 48 mm)			
PAGES	see page B.72	see page B.74	see page B.74

AC: For residual alternating currents.
A: For residual alternating currents, pulsating direct currents superimposed on a smooth direct current of 6 mA.
B: As for type A, pure DC currents and strongly pulsed.

This document is not a contract. SOCOMEC reserves the right to modify features without prior notice in view of continued improvement. 2008 - 2009

SOCOMEC is a specialised manufacturer offering a complete range of earth leakage relays to suit each application:
- presence of disturbances (variable speed drives…) due to their RMS measurement,
- presence of DC components, all our differential relays are a minimum of class A,
- presence of direct current circuits where only RESYS class B devices provide effective detection.

	RESYS B 475	RESYS M40	RESYS P40	RESYS M20
	resys_027_a_4_cat	resys_042_a_1_cat	resys_044_a_1_cat	resys_041_a_1_cat
		●	●	●
		●	●	●
	●			
		●	●	
	●			
	0.03 to 0.5 A	0.03 to 30 A	0.03 to 30 A	0.03 or 0.3 A
	0 to 10 s	0 to 10 s	0 to 10 s	0 or 60 ms
	•	•	•	
	•	•	•	•
	•	•	•	•
	•			
	•	•		•
			•	
	see page B.74	see page B.76	see page B.78	see page B.80

CORE BALANCE TRANSFORMERS

tore_014_a_4_cat

W series - Closed toroids

tore_015_a_4_cat

WR and TFR series -
Rectangular closed toroids

tore_016_a_4_cat

WS series -
Split core toroids

tore_018_a_3_cat

Special toroids for
RESYS B 470 / B 471 / B 420

see page B.82

This document is not a contract. SOCOMEC reserves the right to modify features
without prior notice in view of continued improvement. 2008 - 2009

RESYS B 420

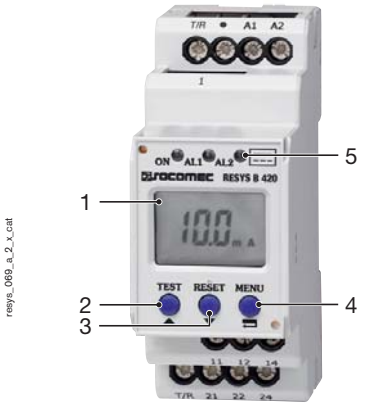

resys_069_a_2_x_cat

RESYS B 420 (Type B)

1. LCD display.
2. "TEST" pushbutton: select to activate autotest function or to scroll up in menu mode.
3. "RESET" pushbutton: reset fault alarm charge parameter, scroll.
4. "MENU" pushbutton: select for menu activation or to confirm setting in menu mode.
5. Alarm Leds: activated in case of alarm and blinking in case of faults.

Functions

Earth leakage protection relay **RESYS Type B 420** is associated with a remote trip breaking device (automatic power cut-off), and provides the following functions:

- protection against indirect contacts,
- limitation of leakage currents.

The relay also monitors electrical installations when used directly as signalling relay.

It is particularly suited to installations where continuous signal components disturb conventional differential devices for AC or A type relays.

Conformity to standards

- IEC 60755
- IEC 60947-2
- IEC 62020
- IEC 60364

General characteristics

- RESYS B 420 relay with 2 alarm relays:
  - either 2 alarm relays,
  - either 1 alarm relays or 1 pre-alarm (50 % to 100 IΔn) relay.
- Adjustment sensitivity 10 to 500 mA.
- Time delay 0 to 10 s.
- Measurement accuracy by TRMS.
- Positive or negative security configurable by the user.
- Automatic permanent relay-toroid connection test.
- Sealed cover.

Applications

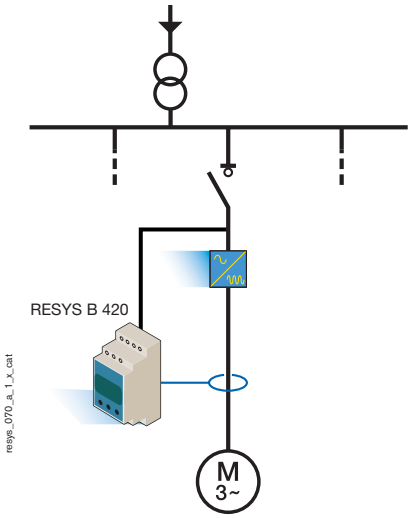

resys_070_a_1_x_cat

Rapid recognition of an insulation fault increases the availability of the distribution network by preventing accidental power cuts and the resulting loss of production. TRMS measurement avoids repeated random tripping and the bargraph allows the display of permanent leakage current.

Examples of conventional applications

AC LV networks: TT, TNS, IT.

Universal monitoring pure AC differential currents (type AC) and pulsed (type A), strongly pulsed (Type B ⎓ , limits of Type A ∿) and DC to provide the following functions:

- protection:
  - against indirect contact,
  - against fire risk,
  - against explosion risk,
  - of earth and protection conductors;
- preventive signalling;
- monitoring installations where periodic insulation measurement with power off is impossible;
- used with SOCOMEC "Core balance transformers" (see page B.82).

This document is not a contract. SOCOMEC reserves the right to modify features without prior notice in view of continued improvement. 2008 - 2009

RESYS B 420

References

Auxiliary power supply U_s[1]	References
16 ... 72 VAC / 9.6 ... 94 VDC	4931 **4602**[1]
70 ... 300 VUC	4931 **4723**[1]

(1) References and characteristics of the "Core balance transformers", see page B.82.

Electrical characteristics

Auxiliary power supply U_s

Frequency	42 … 460 Hz
AC operating zone	see reference table
DC operating zone	see reference table
Max. consumption	3 VA

Insulation (according to IEC 60664-1standard)

Rated insulation voltage	250 VAC
Rated impulse voltage	2.5 kV
Degree of pollution	Class 3

Threshold values

Setting IΔn	10 - 500 mA
Accuracy of tripping	- 35 … 100 % IΔn
Domain of network frequency	0 … 2000 Hz
Specified time setting	0 - 10 s
PRE-ALARM relay tripping	50 - 100 % IΔn
Hysteresis of the PRE-ALARM relay	15 % IΔn

Alarm

Alarm configuration mode	memory / automatic reset
Alarm factory setting	memory
RESET	manual by pushbutton or using the terminals

Output contacts

Number of contacts	2
Type of ALARM 1 contact	230 VAC - 5 A - 1150 VA
Type of ALARM 2 or PRE-ALARM contact	230 VAC - 5 A - 1150 VA
ALARM 1 operating mode	positive / negative security
ALARM 2 or PRE-ALARM operating mode	positive / negative security[1]
Factory setting of ALARM 1 operating mode	positive security
Factory setting of ALARM 2 operating mode	positive security

(1) According to configuration described in the technical manual.

Operating conditions

Operating temperature	- 25 … + 55 °C
Storage temperature	- 30 … + 70 °C

Overall dimensions

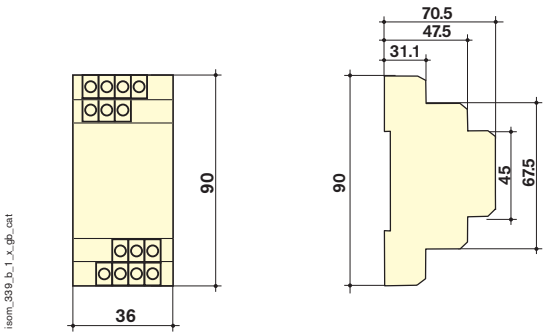

Type	modular
Number of modules	2
Dimensions W x H x D	36 x 90 x 70.5 mm
Case protection rating	IP30
Terminal block protection rating	IP20
Rigid cable connection section	0.2 … 1.5 mm²
Flexible cable connection section	0.2 … 1.5 mm²
Weight	150 g

Terminals

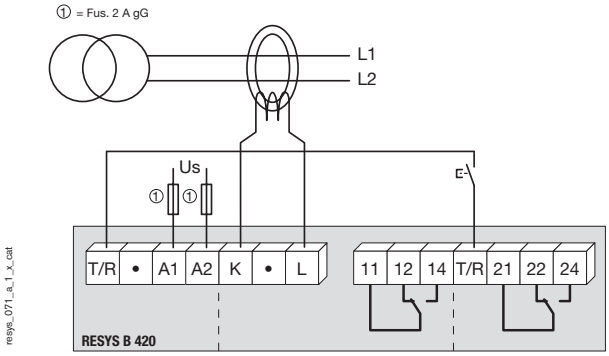

T/R : external test and rest pushbuttons
A1 - A2: auxiliary power supplies U_s
K-L: differential toroid connection
11 - 12 - 14 : alarm relay outputs 1
21 - 22 - 24 : alarm relay outputs 2

This document is not a contract. SOCOMEC reserves the right to modify features without prior notice in view of continued improvement. 2008 - 2009

RESYS Type B

RESYS B 420
RESYS Type B
RESYS M40
RESYS P40
RESYS M20
Core balance transformers

resys_027_a_1_x_cat

Functions

RESYS type B earth leakage relays are associated with a remote trip breaking device (automatic power cut-off), thus providing the following functions:
- protection against indirect contacts,
- limitation of leakage currents.

They also preventively monitor electrical installations via their pre-alarm system or when used as signal relays.

They are particularly suited to installations where continuous components disturb conventional differential devices limited to type AC or A.

Conformity to standards

- IEC 60947-2
- IEC 60364
- IEC 60755
- IEC 62020
- HD 384

General characteristics

- Monitoring all types of differential current: DC (type B ⎓), sinusoidal (type AC ~) and pulsed (type A ⩘) in the TT, TNS and IT networks.
- Devices particularly suitable for circuits with converters (rectifiers, controllers…).
- Sensitivity of 0.03 to 3 A (depending on model).
- Time delay: 0 to 10 s.
- Automatic permanent toroid-relay connection test.
- Built-in 18 mm toroid (type B 475).

RESYS B 475 (Type A / AC / B)

1. "TEST/RESET" pushbutton.
2. "ON" LED.
3. "ALARM" / pre-alarm LED.
4. Parameter configuration microswitches (IΔn…).
5. Bargraph indicating the instantaneous value (in % of IΔn).
6. Time delay setting.
7. Setting value threshold IΔn.
8. Casing with 18 mm diameter built-in detection toroid.

Applications

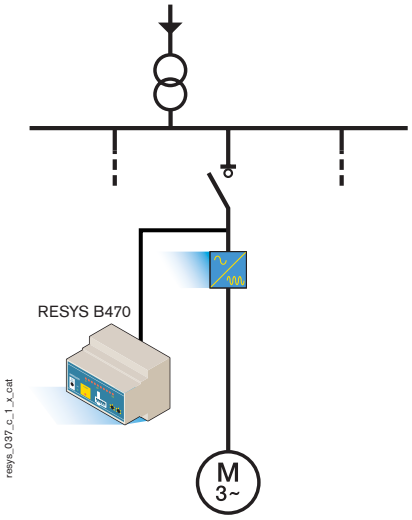

resys_037_c_1_x_cat

Every time a conventional earth leakage device type AC or A is likely to be masked by continuous leakage currrents from converters (speed controllers, rectifiers…), RESYS type B relays must be used to ensure efficient operation.

Examples of conventional applications

AC LV networks, AC with DC parts, in TT, TNS, IT.

Universal monitoring of differential currents of AC type, strongly pulsed (type B ⎓ > limits of type A ⩘) and DC to provide the following functions:
- protection:
  - against indirect contacts,
  - complementary against direct contacts,
  - against fire risk,
  - motor, equipment and hardware protection,
  - protection of earth and protection conductors;
- preventive signalling;
- monitoring installations where periodic insulation measurement with power off is impossible;
- used with SOCOMEC "Core balance transformers" (see page B.82).

This document is not a contract. SOCOMEC reserves the right to modify features without prior notice in view of continued improvement. 2008 - 2009

References

	RESYS B 470	RESYS B 471	RESYS B 475
Auxiliary power supply U_s (1)	References	References	References
230 VAC	4931 **2723** (2)	4931 **2724** (2)	4931 **2725** (2)
90 … 132 VAC	4931 **2711** (2)	4931 **2712** (2)	4931 **2713** (2)
9.6 … 84 VDC	4931 **2604** (2)	4931 **2603** (2)	4931 **2601** (2)

(1) Other supply voltages: please consult us.
(2) References and characteristics of the "Core balance transformers", see page B.82.

Electrical characteristics

Auxiliary power supply U_S

Frequency	50 … 60 Hz
Operating zone	0.85 … 1.1 U_s
Max. consumption	3.5 VA

Insulation (according to IEC 60664-1 standard)

Rated insulation voltage	250 VAC
Rated impulse voltage	4 kV
Degree of pollution	Class 3

Threshold values

Setting IΔn	0.03 … 3 A (1) ; 0.1 … 3 A (2) ; 0.03 … 0.5 A (3)
Accuracy of tripping in class AC	-50 … +100 % IΔn
Accuracy of tripping in class B	-50 … +200 % IΔn
Domain of network frequency	0 … 150 Hz (1) ; 0 … 60 Hz (2) ; 0 … 700 Hz (3)
Specified time setting	0 … 10 s
PRE-ALARM relay tripping	50 % IΔn
Hysteresis of the PRE-ALARM relay	25 %

Alarm

Alarm factory setting	memorisation
RESET	manual by PB

Output contacts

Number of contacts	2
Type of PRE-ALARM contact	250 VAC - 5 A - 1150 VA
Type of ALARM contact	250 VAC - 5 A - 1150 VA
PRE-ALARM operating mode	N.O. / N.C.
ALARM operating mode	N.O. / N.C.
Factory setting of PRE-ALARM operating mode	N.O.
Factory setting of ALARM operating mode	N.O.

Operating conditions

Operating temperature	-10 … +55 °C
Storage temperature	-40 … +70 °C

(1) RESYS B 470.
(2) RESYS B 471.
(3) RESYS B 475.

Overall dimensions

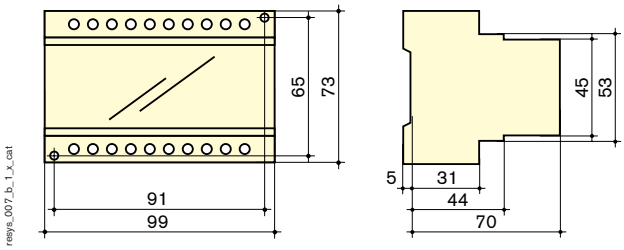

Type	modular
Dimensions W x H x D	99 x 73 x 75 mm
Case protection rating	IP30
Terminal block protection rating	IP20
Rigid cable connection section	0.2 … 4 mm²
Flexible cable connection section	0.2 … 2.5 mm²
Weight	350 g

Terminals

• RESYS B 470 / B 471

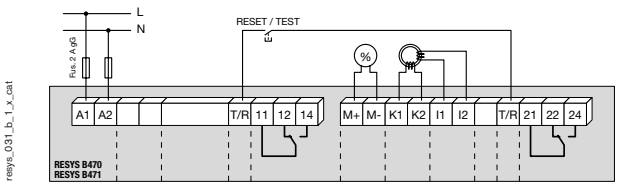

A1 - A2: auxiliary power supplies U_s
T/R - T/R: external test and reset pushbuttons
11 - 12 - 14: alarm relay outputs

M+ - M-: offset insulation level indicators
K1 - K2 - I1 - I2: SOCOMEC type WX-A toroid connection
21 - 22 - 24: pre-alarm or alarm relay outputs

• RESYS B 475

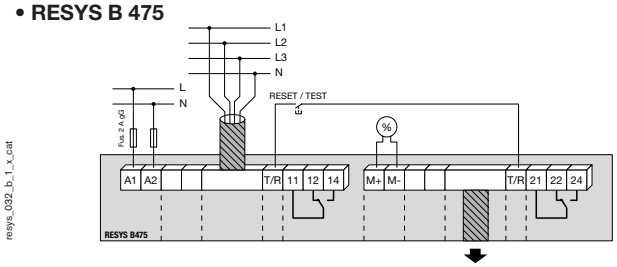

A1 - A2: auxiliary power supplies U_s
Toroid inside casing
T/R - T/R: external test and rest pushbuttons
11 - 12 - 14: alarm relay outputs

M+ - M-: offset insulation level indicators
21 - 22 - 24: pre-alarm or alarm relay outputs

Remark: the PE conductor must be outside the detection toroid

This document is not a contract. SOCOMEC reserves the right to modify features without prior notice in view of continued improvement. 2008 - 2009

RESYS M40

RESYS B 420
RESYS Type B
RESYS M40
RESYS P40
RESYS M20
Core balance transformers

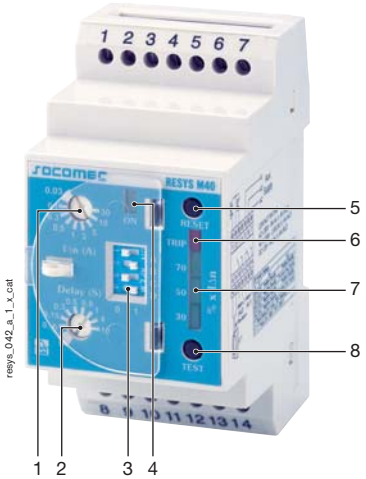

RESYS M40 (Type AC and A)

1. Setting threshold value IΔn.
2. Time delay setting.
3. Configuration micro-switches (x4).
4. "ON" LED.
5. "RESET" pushbutton.
6. "TRIP" alarm LED.
7. LED bargraph (% x IΔn).
8. "TEST" pushbutton.

Functions

Earth leakage protection relay **RESYS Type M40** is associated with a remote trip breaking device (automatic power cut-off), and provides the following functions:

- protection against indirect contacts,
- limitation of leakage currents.

The relay also monitors electrical installations when used directly as signalling relay.

Conformity to standards

- IEC 60755
- IEC 60947-2
- IEC 62020
- IEC 60364

General characteristics

- RESYS M40 relay with 2 alarm relays:
  - either 2 alarm relays,
  - either 1 alarm relays or 1 pre-alarm (50 % IΔn) relay.
- Adjustment sensitivity 0.03 to 30 A.
- Time delay 0 to 10 s.
- Measurement accuracy by TRMS.
- Automatic instantaneous tripping at 30 mA.
- Positive or negative security configurable by the user.
- Selection of toroid ratio.
- Automatic permanent relay-toroid connection test.
- Sealed cover.

Applications

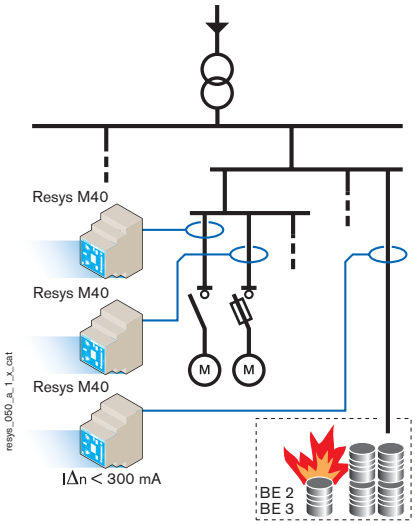

Rapid recognition of an insulation fault increases the availability of the distribution network by preventing accidental power cuts and the resulting loss of production. TRMS measurement avoids repeated random tripping and the bargraph allows the display of permanent leakage current.

Examples of conventional applications

AC LV networks: TT, TNS, IT.

Monitoring pure AC differential currents (type AC) and pulsed (type A) to provide the following functions:

- protection:
  - against indirect contact,
  - against fire risk,
  - against explosion risk,
  - of earth and protection conductors;
- preventive signallin;
- monitoring installations where periodic insulation measurement with power off is impossible;
- used with SOCOMEC "Core balance transformers" (see page B.82).

This document is not a contract. SOCOMEC reserves the right to modify features without prior notice in view of continued improvement. 2008 - 2009

RESYS M40

References

Auxiliary power supply U_s(1)	References
115 / 230 VAC	4941 **2723**(2)
400 VAC	4941 **2740**(2)
12 … 125 VDC	4941 **2602**(2)

(1) Other supply voltages: please consult us.
(2) References and characteristics of the "Core balance transformers", see page B.82.

Electrical characteristics

Auxiliary power supply U_s

Frequency	47 … 63 Hz
AC operating zone	0.8 … 1.15 U_s
DC operating zone	0.8 … 1.05 U_s
Max. consumption	6 VA (AC) / 5 W (DC)

Insulation (according to IEC 60664-1 standard)

Rated insulation voltage	250 VAC
Rated impulse voltage	2.5 kV (115 VAC) / 4 kV (230/400 VAC)
Degree of pollution	Class 3

Threshold values

Setting IΔn	0.03 - 0.1 - 0.3 - 0.5 - 1 - 3 - 5 - 10 - 30 A
Accuracy of tripping	- 20 … - 10 % IΔn
Domain of network frequency	15 … 400 Hz
Specified time setting	0 - 0.06 - 0.15 - 0.30 - 0.50 - 0.80 - 1 - 4 - 10 s
PRE-ALARM relay tripping	50 % IΔn
Hysteresis of the PRE-ALARM relay	20 % IΔn

Alarm

Alarm configuration mode	memory / automatic reset
Alarm factory setting	memory
RESET	manual by pushbutton or using the terminals

Output contacts

Number of contacts	2
Type of ALARM 1 contact	250 VAC - 8 A - 2000 VA
Type of ALARM 2 or PRE-ALARM contact	250 VAC - 6 A - 1500 VA
ALARM 1 operating mode	positive / negative security
ALARM 2 or PRE-ALARM operating mode	positive / negative security(1)
Factory setting of ALARM 1 operating mode	negative security
Factory setting of ALARM 2 operating mode	positive security

(1) According to configuration described in the technical manual.

Operating conditions

Operating temperature	- 20 … + 55 °C
Storage temperature	- 30 … + 70 °C

Overall dimensions

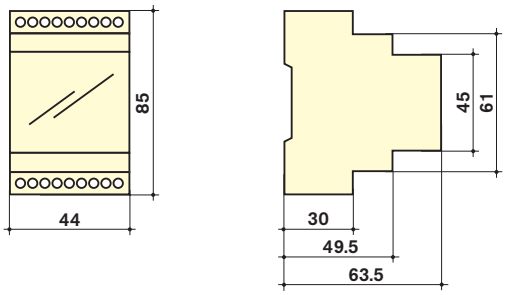

resys_056_a_1_x_cat

Type	modular
Number of modules	2.5
Dimensions W x H x D	44 x 85 x 63.5 mm
Case protection rating	IP40
Terminal block protection rating	IP20
Rigid cable connection section	0.2 … 4 mm²
Flexible cable connection section	0.2 … 2.5 mm²
Weight	190 g

Terminals

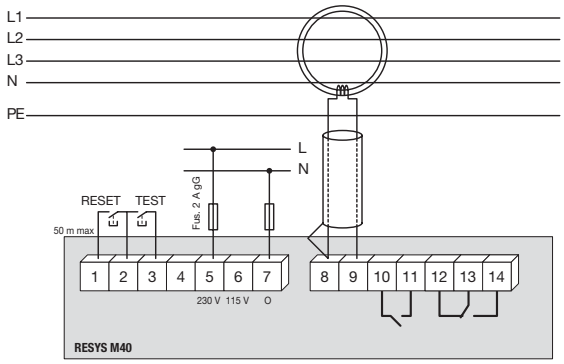

resys_054_a_1_x_cat

1 - 2 - 3: external pushbuttons
5 - 6 - 7: auxiliary power supplies U_s
8 - 9: SOCOMEC differential toroid connections
10 - 11: alarm relay 2 or pre-alarm outputs
12 - 13 - 14: alarm relay 1 outputs

NOTE: The earth must not pass through the C.T.
For single phase applications, only the live and neutral need to be passed through the C.T.
Cabling: for distances > 1 m, use twisted pair cable between the unit and C.T.

This document is not a contract. SOCOMEC reserves the right to modify features without prior notice in view of continued improvement. 2008 - 2009

RESYS P40

RESYS B 420
RESYS Type B
RESYS M40
RESYS P40
RESYS M20
Core balance transformers

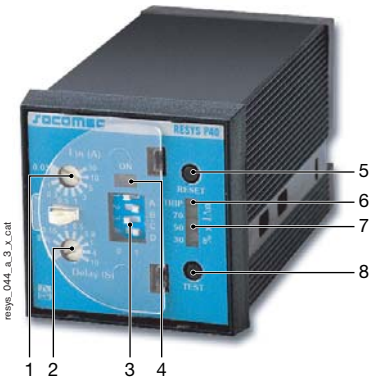

RESYS P40 (Type AC and A)

1. Setting threshold value IΔn.
2. Time delay setting.
3. Configuration micro-switches (x4).
4. "ON" LED.
5. "RESET" pushbutton.
6. "TRIP" alarm LED.
7. LED bargraph (% x IΔn).
8. "TEST" pushbutton.

Functions

Earth leakage protection relay **RESYS Type P40** is associated with a remote trip breaking device (automatic power cut-off), and provides the following functions:

- protection against indirect contacts,
- limitation of leakage currents.

The relay also monitors electrical installations when used directly as signalling relay.

Conformity to standards

- IEC 60755
- IEC 60947-2
- IEC 62020
- IEC 60364

General characteristics

- Compact size.
- RESYS P40 relay with 2 alarm relays:
  - either 2 alarm relays,
  - either 1 alarm relays or 1 pre-alarm (50 % IΔn) relay.
- Adjustment sensitivity 0.03 to 30 A.
- Time delay 0 to 10 s.
- Measurement accuracy by TRMS.
- Automatic instantaneous tripping at 30 mA.
- Positive or negative security configurable by the user.
- Selection of toroid ratio.
- Automatic permanent relay-toroid connection test.
- Sealed cover.

Applications

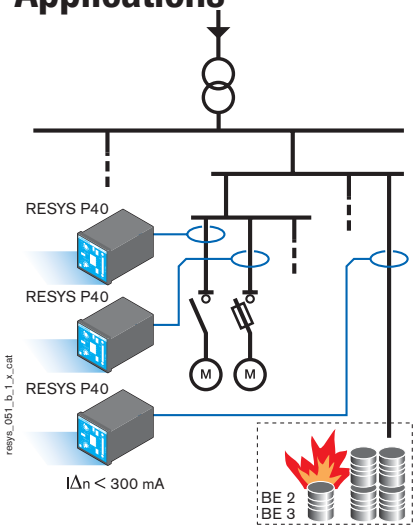

Rapid recognition of an insulation fault increases the availability of the distribution network by preventing accidental power cuts and the resulting loss of production. TRMS measurement avoids repeated random tripping and the bargraph allows the display of permanent leakage current.

RESYS P40 are particularly suitable for insertion in electricity control panels with withdrawable compartments.

Examples of conventional applications

AC LV networks: TT, TNS, IT.

Monitoring pure AC differential currents (type AC) and pulsed (type A) to provide the following functions:

- protection:
  - against indirect contact,
  - against fire risk,
  - against explosion risk,
  - of earth and protection conductors,
  - motor, equipment and hardware protection;
- preventive signalling;
- monitoring installations where periodic insulation measurement with power off is impossible;
- used with SOCOMEC "Core balance transformers" (see page B.82).

This document is not a contract. SOCOMEC reserves the right to modify features without prior notice in view of continued improvement. 2008 - 2009

RESYS P40

References

Auxiliary power supply U_s(1)	References
115 VAC	4942 **2711**(2)
230 VAC	4942 **2723**(2)
12 … 125 VDC	4942 **2602**(2)

(1) Other supply voltages: please consult us.
(2) References and characteristics of the "Core balance transformers", see page B.82.

Accessories

IP65 soft protection cover	4942 **0000**

Electrical characteristics

Auxiliary power supply U_s

Frequency	47 … 63 Hz
AC operating zone	0.8 … 1.15 U_s
DC operating zone	0.8 … 1.05 U_s
Consumption	6 VA (AC) / 5 W (DC)

Insulation (according to IEC 60664-1standard)

Rated insulation voltage	250 VAC
Rated impulse voltage	2.5 kV (115 VAC) / 4 kV (230/400 VAC)
Degree of pollution	Class 3

Threshold values

Setting IΔn	0.03 - 0.1 - 0.3 - 0.5 - 1 - 3 - 5 - 10 - 30 A
Accuracy of tripping	- 20 … - 10 % IΔn
Domain of network frequency	15 … 400 Hz
Specified time setting	0 - 0.06 - 0.15 - 0.30 - 0.50 - 0.80 - 1 - 4 - 10 s
PRE-ALARM relay tripping	50 % IΔn
Hysteresis of the PRE-ALARM relay	20 % IΔn

Alarm

Alarm configuration mode	memory / automatic reset
Alarm factory setting	memory
RESET	manual by pushbutton or using the terminals

Output contacts

Number of contacts	2
Type of ALARM 1 contact	250 VAC - 8 A - 2000 VA
Type of ALARM 2 or PRE-ALARM contact	250 VAC - 6 A - 1500 VA
ALARM 1 operating mode	positive / negative security
ALARM 2 or PRE-ALARM operating mode	positive / negative security(1)
Factory setting of ALARM 1 operating mode	negative security
Factory setting of ALARM 2 operating mode	positive security

(1) According to configuration described in the technical manual.

Operating conditions

Operating temperature	- 20 … + 55 °C
Storage temperature	- 30 … + 70 °C

Overall dimensions

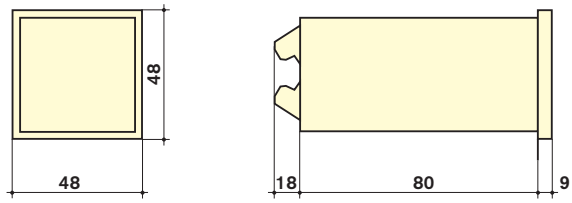

resys_057_b_1_x_cat

Type	panel mounting
Dimensions W x H x D	48 x 48 x 107 mm
Case protection rating	IP40
Terminal block protection rating	IP20
Rigid cable connection section	0.2 … 4 mm²
Flexible cable connection section	0.2 … 2.5 mm²
Weight	190 g
Cut-out	45 x 45 mm

Terminals

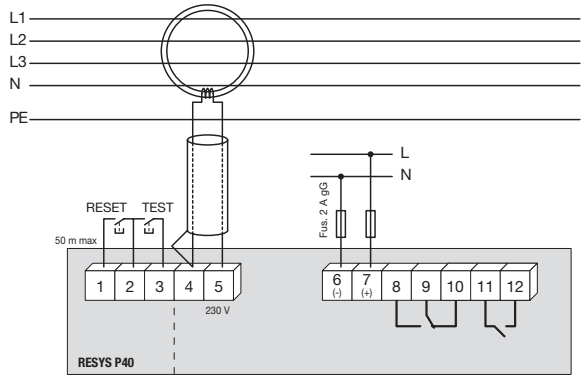

resys_055_b_1_x_cat

1 - 2 - 3: external pushbuttons
4 - 5: SOCOMEC differential toroid connections
6 - 7: auxiliary power supplies U_s
8 - 9 - 10: alarm relay 1 outputs
11 - 12: alarm relay 2 or pre-alarm outputs

NOTE: The earth must not pass through the C.T.
For single phase applications, only the live and neutral need to be passed through the C.T.
Cabling: for distances > 1 m, use twisted pair cable between the unit and C.T.

This document is not a contract. SOCOMEC reserves the right to modify features without prior notice in view of continued improvement. 2008 - 2009

RESYS M20

RESYS B 420
RESYS Type B
RESYS M40
RESYS P40
RESYS M20
Core balance transformers

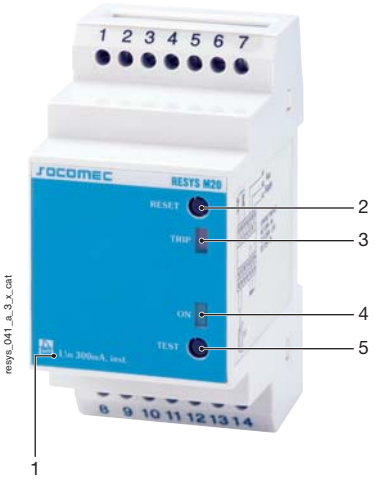

RESYS M20 (Type AC and A)

1. Threshold value and time delay indication.
2. “RESET” pushbutton.
3. “TRIP” alarm LED.
4. “ON” LED.
5. “TEST” pushbutton.

Functions

Earth leakage protection relay
RESYS Type M20 is associated with a remote trip breaking device (automatic power cut-off), and provides the following functions:
- protection against indirect contacts,
- limitation of leakage currents.

The relay also monitors electrical installations when used directly as signalling relay.

Conformity to standards

- IEC 60755
- IEC 60947-2
- IEC 62020
- IEC 60364

General characteristics

- M20 with 1 alarm relay.
- Sensitivity: 30 or 300 mA depending on the version.
- Time setting: 0 (instantaneous) or 60ms depending on the version.
- Measurement accuracy by TRMS.
- Automatic permanent relay-toroid connection test.

Applications

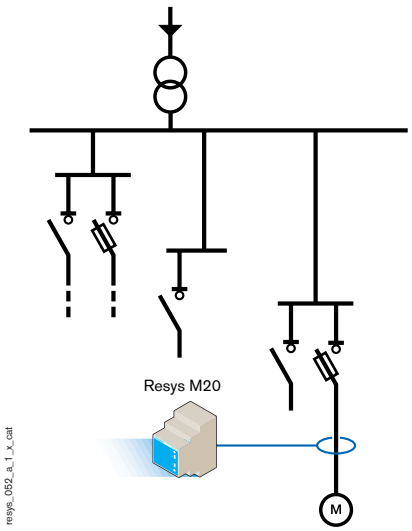

Rapid recognition of an insulation fault increases the availability of the distribution network by preventing accidental power cuts and the resulting loss of production.

Examples of conventional applications
AC LV networks: TT, TNS, IT.
Monitoring pure AC differential currents (type AC) and pulsed (type A) to provide the following functions:
- protection:
  - against indirect contact,
  - against fire risk,
  - of earth and protection conductors;
- preventive signalling;
- used with SOCOMEC “Core balance transformers” (see page B.82).

This document is not a contract. SOCOMEC reserves the right to modify features without prior notice in view of continued improvement. 2008 - 2009

RESYS M20

References

Auxiliary power supply U_s	Setting IΔn	Temporisation	References
115 / 230 VAC	30 mA	0 s	4941 **4723**(1)
115 / 230 VAC	300 mA	0 s	4941 **5723**(1)
115 / 230 VAC	300 mA	60 ms	4941 **6723**(1)

(1) References and characteristics of the "Core balance transformers", see page B.82.

Electrical characteristics

Auxiliary power supply U_s

Frequency	47 … 63 Hz
Operating zone	0.85 … 1.15 U_s
Max. consumption	6 VA

Insulation (according to IEC 60664-1 standard)

Rated insulation voltage	250 VAC
Rated impulse voltage	2.5 kV (115 VAC) / 4 kV (230 VAC)
Degree of pollution	Class 3

Threshold values

Setting IΔn	30 / 300 mA
Accuracy of tripping	- 20 … -10 % IΔn
Domain of network frequency	15 … 400 Hz

Alarm

Alarm configuration mode	memory
RESET	manual by pushbutton or using the terminals

Output contacts

Number of contacts	1
Type of ALARM contact	250 VAC - 8 A - 2000 VA
ALARM operating mode	negative security

Operating conditions

Operating temperature	- 20 … + 55 °C
Storage temperature	- 30 … + 70 °C

Overall dimensions

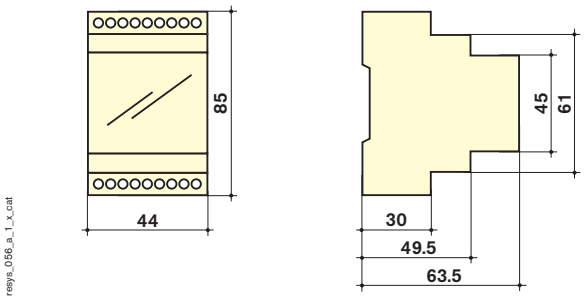

Type	modular
Number of modules	2.5
Dimensions W x H x D	44 x 85 x 63.5 mm
Case protection rating	IP40
Terminal block protection rating	IP20
Rigid cable connection section	0.2 … 4 mm²
Flexible cable connection section	0.2 … 2.5 mm²
Weight	190 g

Terminals

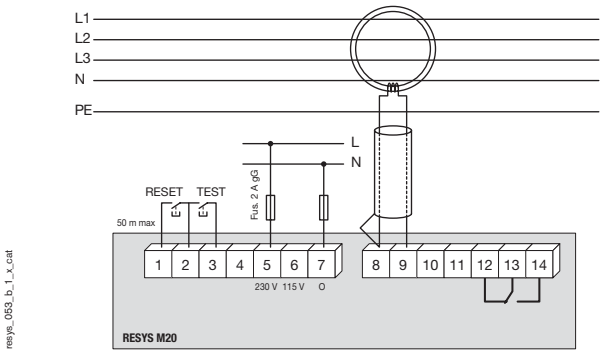

1 - 2 - 3: external pushbuttons
5 - 6 - 7: auxiliary power suply U_s
8 - 9: SOCOMEC differential toroid connections
12 - 13 - 14: alarm relay

NOTE: The earth must not pass through the C.T.
For single phase applications, only the live and neutral need to be passed through the C.T.
Cabling: for distances > 1 m, use twisted pair cable between the unit and C.T.

This document is not a contract. SOCOMEC reserves the right to modify features without prior notice in view of continued improvement. 2008 - 2009

Core balance transformers

tore_015_a_1_cat

Rectangular closed transformers

tore_016_a_1_cat

Split core transformers

tore_014_a_1_cat

Circular closed transformers

Functions

The installation of protection or signalling resources such as earth leakage protection relays involves the use of **core balance transformers**.

These enclose active conductors, providing the differential summation of vector currents and revealing leakage current.

The core balance transformers (toroids) proposed by SOCOMEC are suitable for differential relays RESYS M20/M40/P40.

Closed (series W, WR and TFR) or opening (series WS) types, they suit all wiring configurations.

A special range is proposed for RESYS B470/B 471 and B 420 relays.

Conformity to standards

- IEC 60044-1

Applications

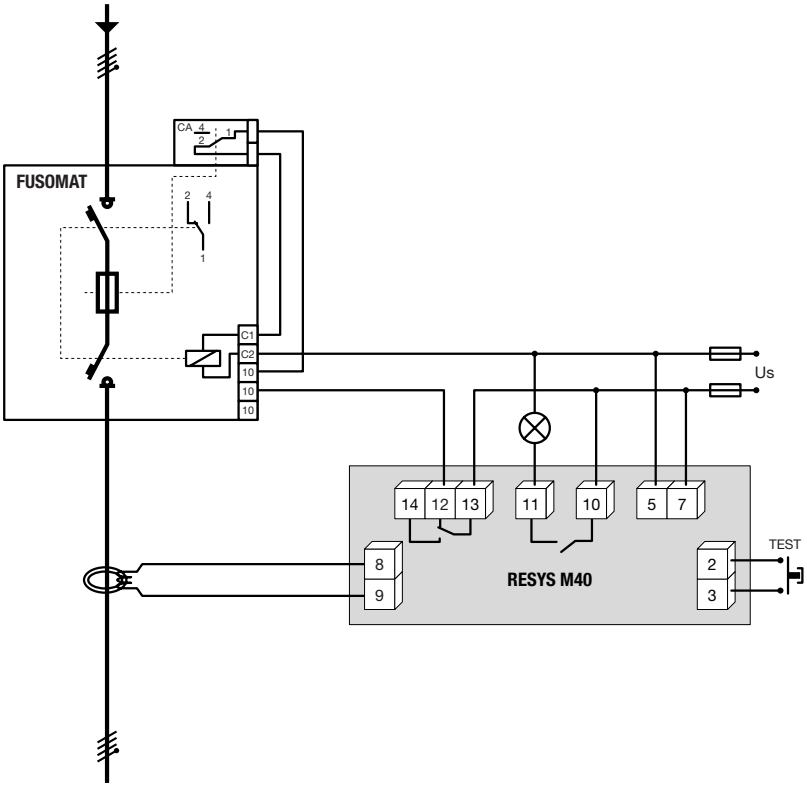

tore_029_a_1_x_cat

RESYS earth leakage relay with FUSOMAT remote trip fuse switches 250 to 1250 A

Save mode is available for some alarm contacts on a output relays on SOCOMEC devices:

- in fault save mode, the alarm is stored in the device. Fault saving thus allows the operator to distinguish the type of fault which tripped the associated breaking and/or protection device (differential fault or overcurrent);
- automatic reset is interesting when the differential relay is used for the following applications:
  - used exclusively as a preventive signalling relay and when operator wishes not to save transient faults,
  - when you want to automatically reset the breaking device concerned for unmonitored installations in the sense of the IEC 60364 standard.

Specific cases: complementary protection against direct contacts to use a differential relay in association with a tripping device, ask for the manufacturer's agreement.

***Example**: 250 to 400 A FUSOMAT with a undervoltage coil and work mode of the negative security relay.*

This document is not a contract. SOCOMEC reserves the right to modify features without prior notice in view of continued improvement. 2008 - 2009

References

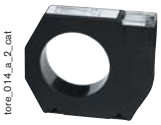

W series - Closed toroids (1)

Type	Toroid diameter (mm)	References
W0-S15	15	4793 **2001**
W1-S35	35	4793 **2003**
W2-S70	70	4793 **2007**
W3-S105	105	4793 **2010**
W4-S140	140	4793 **2014**
W5-S210	210	4793 **2020**

(1) Toroids for RESYS M20 / M40 / P40 relays.

WR and TFR series - Rectangular closed toroids (1)

Type	Toroid diameter (mm)	References
WR 70 x 175	70 x 175	4795 **0717**
WR 115 x 305	115 x 305	4795 **1130**
WR 150 x 350	150 x 350	4795 **1535**
TFR 200 x 500	200 x 500	4795 **2050**

(1) Toroids for RESYS M20 / M40 / P40 relays.

WS series - Split core toroids (1)

Type	Toroid diameter (mm)	References
WS 50 x 80	50 x 80	4795 **0508**
WS 80 x 80	80 x 80	4795 **0808**
WS 80 x 120	80 x 120	4795 **0812**
WS 80 x 160	80 x 160	4795 **0816**

(1) Toroids for RESYS M20 / M40 / P40 relays.

Specific toroids for RESYS B 470 / RESYS B 471

Type	Toroid diameter (mm)	References
W1-A35S for B 470 relay	35	4930 **0035**
W2-A70S for B 470 relay	70	4930 **0070**
W3-A105S for B 471 relay	105	4930 **0105**
W4-A140S for B 471 relay	140	4930 **0140**
W5-A210S for B 471 relay	210	4930 **0210**

Specific toroids for RESYS B 420

Type	Toroid diameter (mm)	References
W0-B 20	20	4730 **0020**
W1-B 35	35	4730 **0035**
W2-B 60	60	4730 **0060**

Accessories	References
Connecting cable length 1 m	4930 **0001**
Connecting cable length 2.5 m	4930 **0002**
Connecting cable length 5 m	4930 **0005**
Connecting cable length 10 m	4930 **0010**

This document is not a contract. SOCOMEC reserves the right to modify features without prior notice in view of continued improvement. 2008 - 2009

Core balance transformers

Electrical characteristics

Insulation coordination	according IEC 60664-1
Rated insulation voltage	690 VAC
Dielectric quality	6 kV
Degree of pollution	3
Test voltage according to IEC 255	3 kVAC
Winding ratio	600 / 1
Winding resistance	≈ 7 Ω

Rated primary current (W/WR/TFR/WS toroids)	10 A
Rated primary current (special toroids for RESYS B470/B471)	3 A
Permanent current withstand	20 A
Associated thermal short circuit current	14 kA/1s
Nominal power	50 mVA
Max. accuracy index	5
Operating temperature	- 10 ... + 55 °C
Inflammability class	UL94V-0

Dimensions

• **W series - Closed toroids or specific toroids for RESYS B470 / RESYS B471**

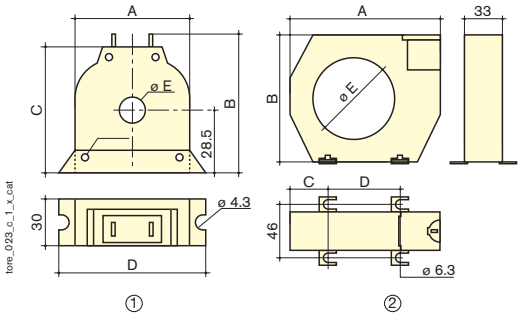

1. W0
2. W1 to W5

Dimensions (mm)	A	B	C	D	E	Weight (kg)
W0-S15	55.5	71	62	75	14.5	0.09
W1-S35/W1-A35S	100	79	26	48.5	35	0.25
W2-S70/W2-A70S	130	110	32	66	70	0.38
W3-S105/W3-A105S	170	146	38	94	105	0.70
W4-S140/W4-A140S	220	196	48.5	123	140	1.50
W5-S210/W5-A210S	229	284	69	161	210	2.50

• **WR series - Rectangular closed toroids**

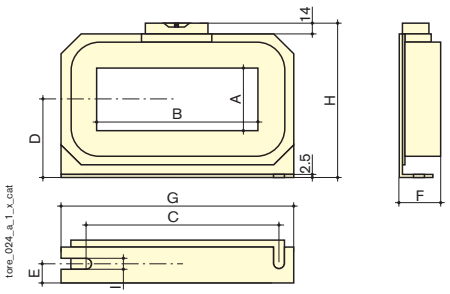

Dimensions (mm)	A	B	C	D	E	F	G	H	I
WR 70 x 175	70	175	225	85	22	46	261	176	7.5
WR 115 x 305	115	305	360	116	25	55	402	240	8
WR 150 x 350	150	350	415	140	28	55	460	285	8

• **WS series - Split core toroids**

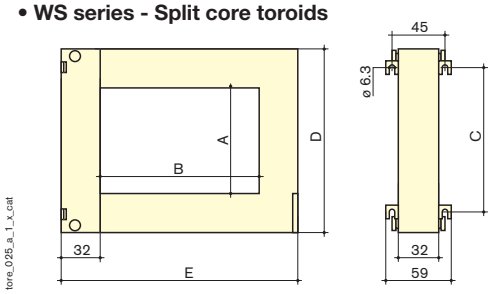

Dimensions (mm)	A	B	C	D	E
WS 50 x 80	50	80	78	114	145
WS 80 x 80	80	80	108	144	145
WS 80 x 120	80	120	108	144	185
WS 80 x 160	80	160	108	144	225

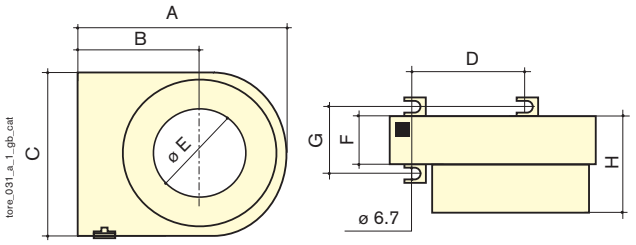

Dimensions (mm)	A	B	C	D	E	F	G	H	Weight (kg)
W0-B 20	76.5	50	56.3	21.4	20	30	47	48.5	0.18
W1-B 35	99.5	62	79.2	49.8	35	30	47	55	0.35
W2-B 60	135	79	116.3	66	60	37	54	67	0.57

This document is not a contract. SOCOMEC reserves the right to modify features without prior notice in view of continued improvement. 2008 - 2009

Dimensions

• TFR series - Rectangular closed toroids

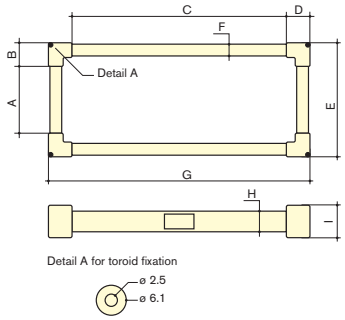

tore_027_c_1_gb_cat

Dimensions (mm)	A	B	C	D	E	F	G	H	I	Weight (kg)
TFR 200 x 500	159	48	460	48	239	26	540	40	76	7.2

Configuration

All the differential relays in the RESYS range have a service LED that indicates the presence of the auxiliary power supply. The position of the fail safe configured contacts indicates the absence of an auxiliary power supply. To provide protection against indirect contacts, the differential relays may be used in the cases described in the table below:

Nature of the differential device (relay + switching device with associated tripping)	Type of installation		Working mode of alarm relays
	Tested and checked by staff at least informed (competence ≥ BA4)	Uninformed staff (competence BA1)	
RESYS and undervoltage trip coil supplied from the network 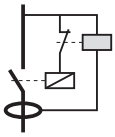	yes	not recommended	fail safe
RESYS and shunt trip coil supplied from the network 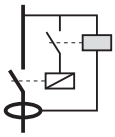	yes	no	not fail safe
RESYS auxiliary source and shunt trip coil supplied from the network 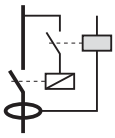	oui + signalisation d'un défaut de la source auxiliaire	no	not fail safe
RESYS auxiliary source and undervoltage trip coil supplied from the network 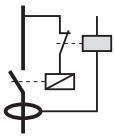	yes	not recommended	fail safe
RESYS and shunt trip coil supplied from a common auxiliary source 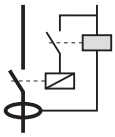	oui + signalisation d'un défaut de la source auxiliaire	no	not fail safe
RESYS and undervoltage trip coil supplied from a common auxiliary source 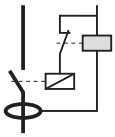	yes	no	fail safe or not

This document is not a contract. SOCOMEC reserves the right to modify features without prior notice in view of continued improvement. 2008 - 2009

SELECTION GUIDE

PROTECTION AGAINST TRANSIENT OVERVOLTAGES SURGYS®

	Primary surge protector		
	SURGYS G140-F	SURGYS G40-FE	SURGYS G70
APPLICATIONS			
Network protection	LV	LV	LV
Type of lightning protector	1	1	2
Protection for main distribution panel with sensitive receivers		●	
Equipment protection			
Coordination accessories			
CHARACTERISTICS			
Current of discharge in wave 8 / 20 µs (I max)	140 kA	40 kA	70 kA
Protection Level (Up)	2.5 kV	1.5 kV	2.5 kV
Protection Mode	MC	MC	MC
Recommended protection device against short-circuits	FUSERBLOC	FUSERBLOC	FUSERBLOC
PAGES	Consult us	Consult us	Consult us

MC: Common mode compared to the ground.
MD: Differential mode between active conductors.

This document is not a contract. SOCOMEC reserves the right to modify features without prior notice in view of continued improvement. 2008 - 2009

SOCOMEC Surge protections are designed to ensure the protection for LV distribution networks and communication networks against transient overvoltages.
The choice of the protection depends on the characteristics of the network:
- type of network to be protected, expected protection level.
- performances of the protection and other functions (telemetry, removable module).

Distribution surge protector

	SURGYS D40	SURGYS E10	SURGYS L1
	LV	LV	LV
	2	2 and 3	
	●	●	
			●
	40 kA	10 kA	–
	2 kV / 1.5 kV	1.5 kV / 1 kV	–
	MD / MC	MD / MC	–
	RMS	RMS	–
	Consult us	Consult us	Consult us

Low current surge protector

	SURGYS RS-2	SURGYS mA-2	SURGYS TEL-2	SURGYS COAX
	RS 422 /485 T2	Analogue signals	PSTN	Coaxial link
	●	●	●	●
	20 kA	20 kA	20 kA	10 kA
	25 V	75 V	220 V	25 V
	MD / MC	MD / MC	MD / MC	MD / MC
	–	–	–	–
	Consult us	Consult us	Consult us	Consult us

This document is not a contract. SOCOMEC reserves the right to modify features without prior notice in view of continued improvement. 2008 - 2009

MOUNTING AND CABLING SYSTEMS

Facilitate installation and secure distribution

THE DISTRIBUTION OF ENERGY IN TOTAL SAFETY AND OPTIMUM ELECTRICAL EQUIPMENT INSTALLATION are the general functions of the products in the "Mounting and cabling systems" field.

For local safety breaking purposes, SOCOMEC – leader in this field – offers the widest range of equipped enclosures on the market, able to cope with all the constraints of your operation, whatever the level of safety required (disconnection, switching for mechanical maintenance, emergency breaking).

In terms of reactive energy compensation, SOCOMEC solutions extend from the complete high power cabinet to the single unit compensation tray, via a range of compensation regulators.

For use in any constant or variable reactive power application – even those generating disturbances of up to 100 % of the installed capacity –, SOCOMEC's COSYS® systems can completely guarantee both quality and results. In addition to their long service life, their quality design ensures that they are easy to install, use and maintain.

To contain and protect your electrical equipment, SOCOMEC enclosures are suitable for all kinds of installation, from an LV main panel several metres in size to the smallest switch enclosure.

These enclosures offer numerous advantages:

- protection against external influences of the most diverse types,
- attractive design for successful integration in an industrial or tertiary environment,
- simplicity of mounting, configuration and assembly operations.

To install equipment within an enclosure, SOCOMEC offers a large choice of mounting and cabling accessories. All our products guarantee you optimum operating and safety conditions, whatever your application. At our KEMA/LOVAG test laboratory, we rigorously test their electrodynamic withstand, resistance to ageing and chemical properties.

Enclosed switches
[C.4 - C.17]

Reactive energy compensation
[C.18 - C.21]

Empty enclosures
[C.22 - C.29]

Mounting and cabling accessories
[C.30 - C.71]

Enclosed switches
ATEX enclosures [C.14]
For use in zone 21 and 22 explosive atmospheres, this panel allows loads and sources to be connected and disconnected in complete safety for both the user and the installation.

Empty enclosures
CADRYS DELTA modular [C.26]
For use in a variety of applications such as command and control panels and modular panels, Cadrys Delta ensures safe and comfortable use thanks in particular to its rear pivoting panel, which is fitted as standard.

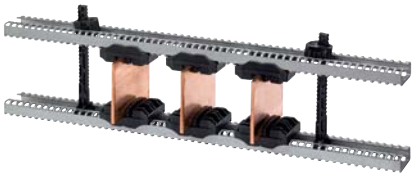

Mounting and cabling accessories
SB C ER [C.46]
Busbar support with fixed interphase for stock optimisation, tailored installation, admissible current up to 3250 A and a short circuit current up to 80 kA.

MOUNTING AND CABLING
SYSTEMS

This document is not a contract. SOCOMEC reserves the right to modify features without prior notice in view of continued improvement. 2008 - 2009

SELECTION GUIDE

ENCLOSED SWITCHES

APPLICATIONS

Environment

- Chemical attack
- Mechanical risk
- Dust hazard
- Contamination hazard
- Atmospheric corrosion

CHARACTERISTICS

SAFETY FUNCTIONS

- Fully visible breaking
- Visible breaking
- Double door locking
- Triple locking of the handle
- Mechanical flag indicator (optional)

EXTERNAL OPERATION

- Front
- Right-side

CONNECTION

- Top / Bottom
- Bottom / Bottom

PAGES

This document is not a contract. SOCOMEC reserves the right to modify features without prior notice in view of continued improvement. 2008 - 2009

SOCOMEC offers a full range of enclosures for all types of applications:

- **steel** or **polyester safety enclosures** allow you to see the separation of the contacts, include double locking and offer an optional mechanical flag indicator,
- the ATEX enclosures are sheet steel safety enclosures for potentially explosive atmospheres,
- **steel, polyester** or **plastic breaking enclosures** offer visible breaking.
  They are equipped, depending on requirements, with load break switches (see page A.4), changeover switches (see page A.80) or fuse combination switches (see page A.152).

coff_156_b_1_cat

coff_163_a_1_cat

cof_280_b_2_cat

ATEX
Area 21 or 22 (dust) according to the ATEX 94/9/CE European Directive

CUSTOMISED SOLUTIONS

coff_145_c_2_cat

coff_040_a_2_cat

coff_045_a_1_cat

tablo_006_a_2_cat

	SAFETY ENCLOSURES Steel	SAFETY ENCLOSURES Polyester	ATEX ENCLOSURES Steel
		●	
	●		●
	●	●	●
		●	
		●	
	●	●	●
	●	●	●
	●	●	●
	●	●	●
	●	●	●
	●	●	
	●	●	●
	●	●	
	●	●	●
	see page C.6	see page C.6	see page C.14

see page C.16

This document is not a contract. SOCOMEC reserves the right to modify features without prior notice in view of continued improvement. 2008 - 2009

Safety enclosures

coff_163_a_1_cat

coff_156_b_1_cat

Functions

Safety enclosures equipped with SOCOMEC switches provide emergency breaking, breaking for mechanical maintenance and safety isolation in the vicinity of any low voltage final circuit.

They offer the following features:
- fully visible breaking,
- visible breaking,
- double door locking,
- triple locking of the handle,
- mechanical flag indicator (optional).

Conformity to standards

- IEC 60364
- EN 60204-1
- EN 60439
- EN 60695-2-11

General characteristics

Environment	Steel	Polyester
Chemical attack		•
Mechanical risk	•	
Dust hazard	•	•
Contamination hazard		•
Atmospheric corrosion		•

- **Steel enclosure**
- FEP01ZE steel, electrogalvanised, 2 mm thick.
- 2 earth connection points.
- IP55, Ik 10 (glass excepted).
- **Polyester enclosure**
- High comparative tracking index.
- High resistance to chemicals.
- Self-extinguishing at 960°C.
- 2 earth connection points.

This document is not a contract. SOCOMEC reserves the right to modify features without prior notice in view of continued improvement. 2008 - 2009

Safety functions

Fully visible breaking

coff_233_a_1_cat

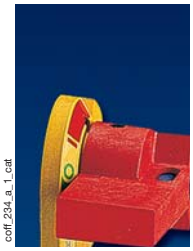
coff_234_a_1_cat

The handle can only indicate the "open" position if the contacts are actually open.

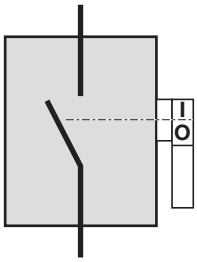

coff_259_b_1_x_cat

Locking

coff_221_a_2_cat

The ergonomic handle can accommodate up to three locks.

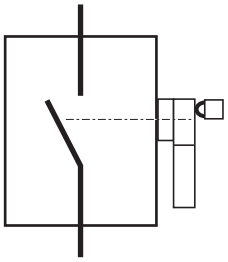
coff_260_a_1_x_cat

Double locking (e.g. side operation)

coff_037_a_2_cat

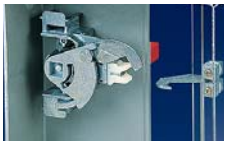
coff_038_a_2_cat

The double locking of the enclosure prevents the opening of the door when the breaking device is closed and the closure of the breaking device when the door is open.

coff_034_a_1_cat

Neutralisation of the double locking feature

It is possible to close the breaking device when the enclosure door is open by using a tool to inhibit the double lock, thus allowing tests to be carried out by qualified staff.

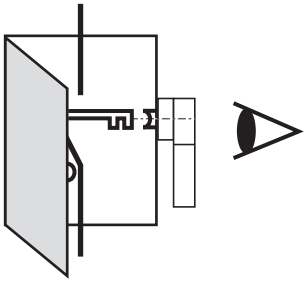
coff_261_a_1_x_cat

Visible breaking

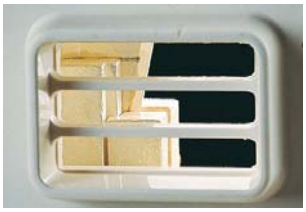
coff_035_a_2_cat

In position 1

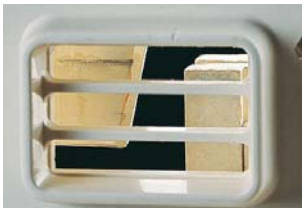
coff_036_a_2_cat

In position 0

In accordance with NF C 13-100: "an isolating device is considered as having visible breaking if the separation of the contacts is directly visible."

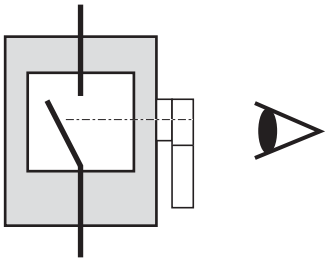
coff_262_a_1_x_cat

Optional extra: mechanical flag indicator

coff_243_a_1_x_cat

coff_042_a_2_cat

coff_043_a_2_cat

Flush with the sight glass and integral with the movable bar, it indicates the position of the contacts unambiguously and at a glance.

It provides easier visualisation of the visible breaking.

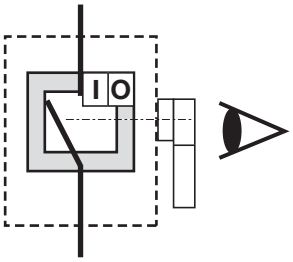

coff_263_a_1_x_cat

This document is not a contract. SOCOMEC reserves the right to modify features without prior notice in view of continued improvement. 2008 - 2009

Safety enclosures

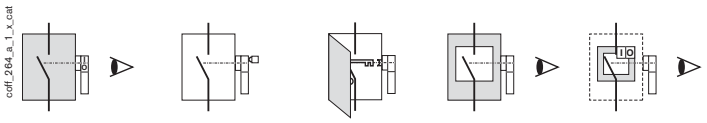

Steel enclosure

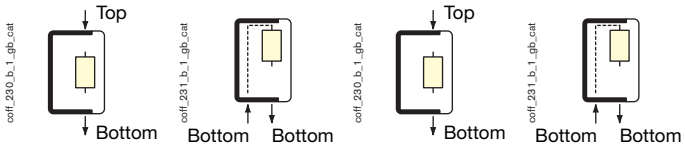

References[1]		SIDER with front operation		SIDER with side operation	
Rating (A)	No. of poles	References	References	References	References
50	3 P	3211 **3005**	3221 **3005**	3261 **3005**	3271 **3005**
50	4 P	3211 **4005**	3221 **4005**	3261 **4005**	3271 **4005**
50	6 P	-	-	3261 **6005**	3271 **6005**
80	3 P	3211 **3008**	3221 **3008**	3261 **3008**	3271 **3008**
80	4 P	3211 **4008**	3221 **4008**	3261 **4008**	3271 **4008**
80	6 P	-	-	3261 **6008**	3271 **6008**
125	3 P	3211 **3012**	3221 **3012**	3261 **3012**	3271 **3012**
125	4 P	3211 **4012**	3221 **4012**	3261 **4012**	3271 **4012**
125	6 P	3211 **6012**	3221 **6012**	3261 **6012**	3271 **6012**
200	3 P	3211 **3020**	3221 **3020**	3261 **3020**	3271 **3020**
200	4 P	3211 **4020**	3221 **4020**	3261 **4020**	3271 **4020**
200	6 P	3211 **6020**	3221 **6020**	3261 **6020**	3271 **6020**
400	3 P	3211 **3040**	3221 **3040**	3261 **3040**	3271 **3040**
400	4 P	3211 **4040**	3221 **4040**	3261 **4040**	3271 **4040**
400	6 P	3211 **6040**	3221 **6040**	-	-
500	3 P	3211 **3050**	3221 **3050**	3261 **3050**	3271 **3050**
500	4 P	3211 **4050**	3221 **4050**	3261 **4050**	3271 **4050**
630	3 P	3211 **3063**	3221 **3063**	3261 **3063**	3271 **3063**
630	4 P	3211 **4063**	3221 **4063**	3261 **4063**	3271 **4063**
800	3 P	3211 **3080**	3221 **3080**	3261 **3080**	3271 **3080**
800	4 P	3211 **4080**	3221 **4080**	3261 **4080**	3271 **4080**
1250	3 P	3211 **3120**	3221 **3120**	3261 **3120**	3271 **3120**
1250	4 P	3211 **4120**	3221 **4120**	3261 **4120**	3271 **4120**
1600	3 P	3211 **3160**	3221 **3160**	3261 **3160**	3271 **3160**
1600	4 P	3211 **4160**	3221 **4160**	3261 **4160**	3271 **4160**

(1) For the mechanical indicator option, replace the second digit in the enclosure reference number with the letter V.
For example: 3V11 3005.

General characteristics

- *Load break switch: SIDER with visible breaking.*
- *Handle: aluminium, natural colour.*
- *Protection degree: IP55.*
- *Colour: RAL 9001, roof and/or closing plates RAL 7032.*
- *Cable gland plate/s: "Top - Bottom" and "Bottom - Bottom" configuration.*
- *Raw material: galvanised steel, thickness 20 / 10 mm.*
- *Coating: polyester powder.*
- *Wall mounting: 4 fixing lugs supplied loose.*
- *Locking system: 8 mm male square (key supplied).*
- *Miscellaneous: "Bottom-Bottom" configuration, connection through busbar system (range > 80 A).*

Rated operational currents I_e (A)		50 A	80 A	125 A	200 A	400 A	500 A	630 A
Rated voltage	Load duty category							
400 VAC	AC-21	50	80	125	200	400	500	630
	AC-22	50	63	125	200	400	500	630
	AC-23	50	63	125	200	400	500	630
690 VAC	AC-21	40	63	100	160	400	400	630
	AC-22	25	40	63	100	200	200	315
	AC-23	-	10	16	-	80	80	100
Operational power (kW)								
400 VAC without pre-break		25	30	63	100	220	220	355
690 VAC without pre-break		-	7.5	11	-	75	75	90
400 VAC with pre-break		25	30	63	100	220	220	355
690 VAC with pre-break		22	33	55	90	185	185	295

This document is not a contract. SOCOMEC reserves the right to modify features without prior notice in view of continued improvement. 2008 - 2009

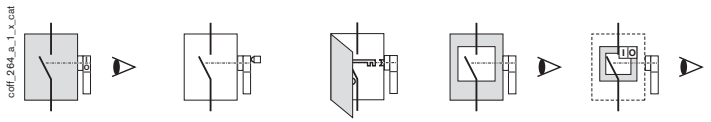

Steel enclosure

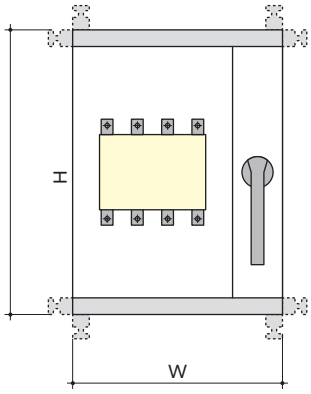

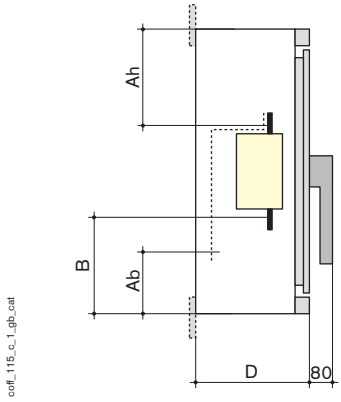

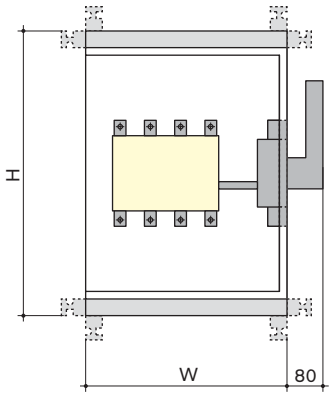

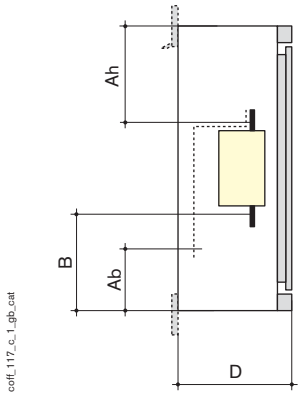

Connection

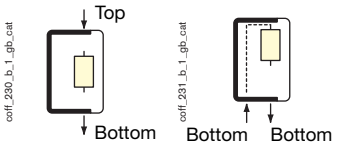

Dimensions - Front operation

Rating (A)	No. of poles	H x W x D (mm)	Max. cond. section (mm²)	Ah	B	Weight (kg)	Ab	B	Weight (kg)
50	3/4 P	300 x 250 x 130	16	70	160	9	205	155	9
80	3/4 P	300 x 250 x 130	35	70	105	10	225	135	10
125	3/4 P	400 x 300 x 200	50	130	135	15	130	185	16
125	6 P	600 x 500 x 200	50	195	195	18	180	235	21
200	3 P	400 x 300 x 200	95	150	200	17	215	275	18
200	4 P	500 x 400 x 200	95	150	200	17	215	275	18
200	6 P	600 x 500 x 200	95	225	230	22	315	375	24
400	3/4 P	700 x 500 x 250	185	220	245	33	240	305	37
400	6 P	800 x 700 x 400	185	300	300	45	340	405	60
500	3/4 P	700 x 500 x 250	185	215	240	34	240	300	39
630	3/4 P	900 x 500 x 300	2 x 300	380	500	47	320	525	84
800	3/4 P	1200 x 600 x 400	2 x 300	380	500	52	320	525	85
1250	3 P	1200 x 600 x 400	4 x 185	375	495	70	-	-	90
1250	4 P	1200 x 700 x 400	4 x 185	375	495	74	-	-	94
1600	3 P	1200 x 600 x 400	4 x 300	360	480	80	-	-	92
1600	4 P	1200 x 700 x 400	4 x 300	360	480	85	-	-	96

Connection

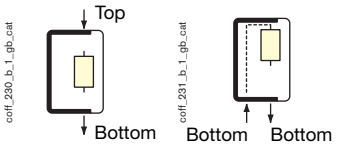

Dimensions - Side operation

Rating (A)	No. of poles	H x W x D (mm)	Max. cond. section (mm²)	Ah	B	Weight (kg)	Ab	B	Weight (kg)
50	3/4 P	300 x 200 x 150	16	120	130	9	210	160	9
50	6 P	300 x 400 x 200	16	120	130	10	210	160	10
80	3/4 P	300 x 200 x 150	35	100	110	8	230	140	9
80	6 P	300 x 400 x 200	35	100	110	10	230	140	10
125	3/4 P	400 x 300 x 200	50	155	130	16	190	225	17
125	6 P	500 x 400 x 200	50	190	190	17	240	275	21
200	3 P	400 x 300 x 200	95	-	-	-	180	220	21
200	3 P	500 x 300 x 200	95	185	185	18	-	-	-
200	4 P	500 x 400 x 200	95	185	185	21	250	295	22
200	6 P	600 x 500 x 200	95	235	235	25	300	345	27
400	3/4 P	700 x 400 x 250	185	270	230	30	345	405	35
500	3/4 P	700 x 400 x 250	185	265	225	32	340	400	39
630	3/4 P	900 x 500 x 300	2 x 300	320	320	47	455	540	55
800	3/4 P	900 x 500 x 300	2 x 300	310	310	55	445	530	85
1250	3 P	1200 x 600 x 400	4 x 185	465	465	70	670	770	90
1250	4 P	1200 x 700 x 400	4 x 185	465	465	74	670	770	100
1600	3 P	1200 x 600 x 400	4 x 300	445	445	75	650	790	100
1600	4 P	1200 x 700 x 400	4 x 300	445	445	76	650	790	110

This document is not a contract. SOCOMEC reserves the right to modify features without prior notice in view of continued improvement. 2008 - 2009

Safety enclosures

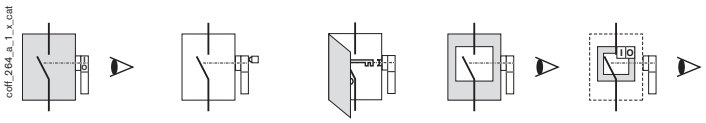

Polyester enclosure

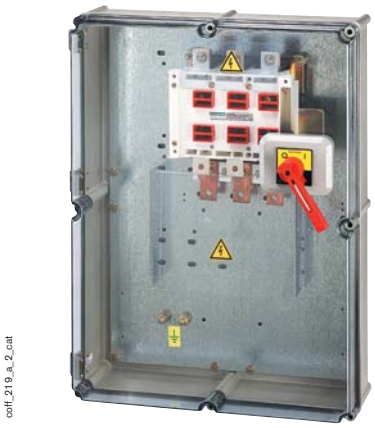

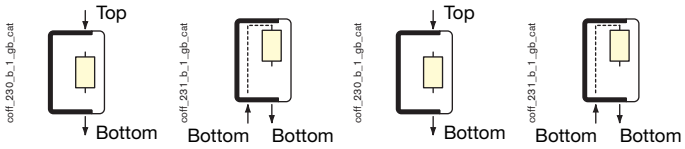

References[1]		Connection SIDER with front operation		Connection SIDER with side operation	
Rating (A)	No. of poles	References	References	References	References
50	3 P	-	-	3265 **3005**	3265 **3005**
50	4 P	-	-	3265 **4005**	3265 **4005**
50	6 P	-	-	3265 **6005**	3265 **6005**
80	3 P	-	-	3265 **3008**	3265 **3008**
80	4 P	-	-	3265 **4008**	3265 **4008**
80	6 P	-	-	3265 **6008**	3265 **6008**
125	3 P	3215 **3012**	3225 **3012**	3265 **3012**	3275 **3012**
125	4 P	3215 **4012**	3225 **4012**	3265 **4012**	3275 **4012**
125	6 P	3215 **6012**	3225 **6012**	3265 **6012**	3275 **6012**
200	3 P	3215 **3020**	3225 **3020**	3265 **3020**	3275 **3020**
200	4 P	3215 **4020**	3225 **4020**	3265 **4020**	3275 **4020**
200	6 P	3215 **6020**	3225 **6020**	3265 **6020**	3275 **6020**
400	3 P	3215 **3040**	3225 **3040**	3265 **3040**	3275 **3040**
400	4 P	3215 **4040**	3225 **4040**	3265 **4040**	3275 **4040**
400	6 P	3215 **6040**	3225 **6040**	-	-
500	3 P	3215 **3050**	3225 **3050**	3265 **3050**	3275 **3050**
500	4 P	3215 **4050**	3225 **4050**	3265 **4050**	3275 **4050**
630	3 P	3215 **3063**	3225 **3063**	3265 **3063**	3275 **3063**
630	4 P	3215 **4063**	3225 **4063**	3265 **4063**	3275 **4063**
800	3 P	3215 **3080**	3225 **3080**	3265 **3080**	3275 **3080**
800	4 P	3215 **4080**	3225 **4080**	3265 **4080**	3275 **4080**
1250	3 P	3215 **3120**	3225 **3120**	3265 **3120**	3275 **3120**
1250	4 P	3215 **4120**	3225 **4120**	3265 **4120**	3275 **4120**
1600	3 P	3215 **3160**	3225 **3160**	3265 **3160**	3275 **3160**
1600	4 P	3215 **4160**	3225 **4160**	3265 **4160**	3275 **4160**

(1) For the mechanical indicator option, replace the second digit in the enclosure reference number with the letter V.
For example: 3V15 3012.

General characteristics

- *Load break switch: SIDER with visible breaking.*
- *Handle: red plastic.*
- *Protection degree: IP55.*
- *Colour: RAL 7030 (range ≤ 400 A), RAL 9002 (range > 400 A).*
- *Cable gland plate: none.*
- *Raw material: glass fibre reinforced polyester.*
- *Coating: none.*
- *Wall mounting: 4 fixing lugs supplied loose.*
- *Locking system: screws (range ≤ 400 A), 3 mm double bar (key supplied).*
- *Miscellaneous: "Bottom-Bottom" configuration, connection through busbar system (range > 80 A).*

Rated operational currents I_e (A)		50 A	80 A	125 A	200 A	400 A	500 A	630 A
Rated voltage	Load duty category							
400 VAC	AC-21	50	80	125	200	400	500	630
	AC-22	50	63	125	200	400	500	630
	AC-23	50	63	125	200	400	500	630
690 VAC	AC-21	40	63	100	160	400	400	630
	AC-22	25	40	63	100	200	200	315
	AC-23	-	10	16	-	80	80	100
Operational power (kW)								
400 VAC without pre-break		25	30	63	100	220	220	355
690 VAC without pre-break		-	7.5	11	-	75	75	90
400 VAC with pre-break		25	30	63	100	220	220	355
690 VAC with pre-break		22	33	55	90	185	185	295

This document is not a contract. SOCOMEC reserves the right to modify features without prior notice in view of continued improvement. 2008 - 2009

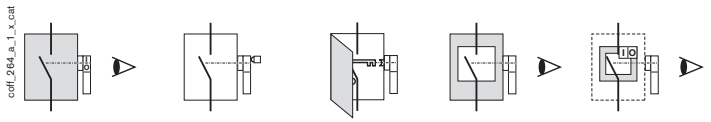

▶ *Coffrets polyester*

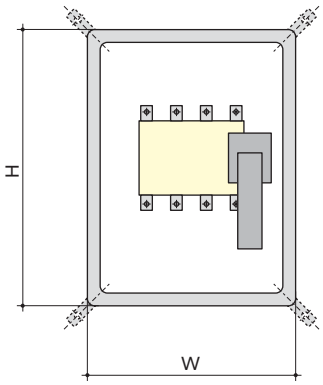

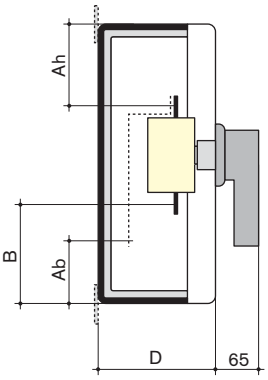

Connection

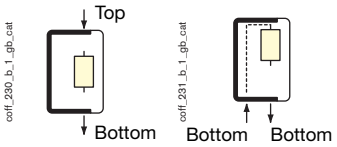

Dimensions - Front operation

Rating (A)	No. of poles	H x W x D (mm)	Max. cond. section (mm²)	Ah	B	Weight (kg)	Ab	B	Weight (kg)
125	3/4 P	360 x 270 x 171	50	135	110	6	-	-	-
125	3/4 P	360 x 270 x 201	50	-	-	-	167	205	6
125	6 P	360 x 540 x 171	50	135	110	8	167	205	9
200	3 P	360 x 270 x 201	95	-	-	-	145	190	8
200	3 P	540 x 270 x 201	95	260	150	7	-	-	-
200	4 P	360 x 360 x 201	95	-	-	-	145	190	8
200	4 P	540 x 360 x 201	95	257	153	9	-	-	-
200	6 P	360 x 540 x 201	95	257	153	13	145	190	15
400	3/4 P	720 x 540 x 214	185	258	257	19	330	395	24
500	3/4 P	720 x 540 x 214	185	258	257	20	330	390	26
630	3/4 P	800 x 600 x 300	2 x 300	270	270	26	330	400	36
800	3/4 P	800 x 600 x 300	2 x 300	266	267	27	330	394	40
1250	3/4 P	1000 x 750 x 300	4 x 185	365	365	42	515	594	60
1600	3/4 P	1000 x 750 x 300	4 x 300	360	360	47	500	580	65

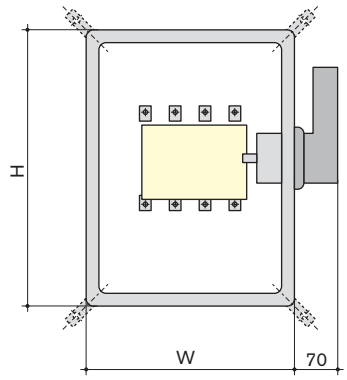

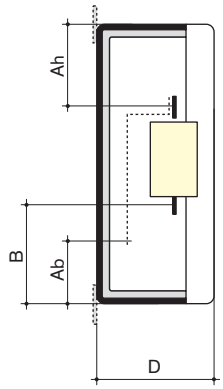

Connection

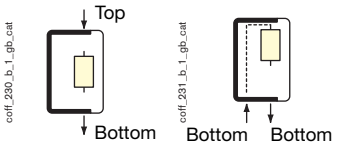

Dimensions - Side operation

Rating (A)	No. of poles	H x W x D (mm)	Max. cond. section (mm²)	Ah	B	Weight (kg)	Ab	B	Weight (kg)
50	3/4 P	270 x 180 x 171	16	84	116	3	186	116	3
50	6 P	270 x 360 x 201	16	84	116	5	186	116	5
80	3/4 P	270 x 180 x 171	35	73	106	3	197	106	3
80	6 P	270 x 360 x 201	35	73	106	5	197	106	5
125	3/4 P	360 x 270 x 171	50	135	110	6	167	205	6
125	6 P	360 x 540 x 171	50	135	110	9	167	205	9
200	3 P	360 x 270 x 171	95	-	-	-	145	190	7
200	3 P	540 x 270 x 171	95	260	150	8	-	-	-
200	4 P	360 x 360 x 171	95	-	-	-	145	190	8
200	4 P	540 x 360 x 171	95	257	153	9	-	-	-
200	6 P	540 x 540 x 171	95	260	150	12	145	190	11
400	3/4 P	720 x 540 x 201	185	300	215	19	370	437	24
500	3/4 P	720 x 540 x 201	185	300	215	21	230	432	26
630	3/4 P	800 x 600 x 300	2 x 300	270	270	26	390	438	36
800	3/4 P	800 x 600 x 300	2 x 300	266	267	27	370	434	40
1250	3/4 P	1000 x 750 x 300	4 x 185	365	365	42	570	622	60
1600	3/4 P	1000 x 750 x 300	4 x 300	360	360	47	550	608	65

This document is not a contract. SOCOMEC reserves the right to modify features without prior notice in view of continued improvement. 2008 - 2009

Safety enclosures

Accessories

Auxiliary contacts

cotf_177_a_1_cat

Use

For pre-breaking or signalling of positions 0 and I of the breaking switch.

Mounting

- On the double locking system.
- Possibility of factory mounting on enclosure (give enclosure reference when ordering).

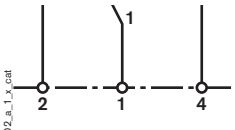

cotf_002_a_1_x_cat

1st pre-break NO/NC AC

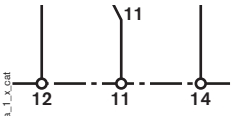

cotf_003_a_1_x_cat

2nd pre-break NO/NC AC

References

Front operation

Contact (s)	References
2 NO/NC changeover AC in steel or polyester enclosure	2999 **0012**
1st NO/NC changeover AC in polyester enclosure ≥ 125 A	2799 **0001**
2nd NO/NC changeover AC in polyester enclosure ≥ 125 A	2799 **0002**

Side operation

Contact (s)	Reference
2 NO/NC changeover AC in steel or polyester enclosure	2999 **0012**

Front operation (factory fitted)

Contact (s)	References
2 NO/NC changeover AC in steel or polyester enclosure	2999 **1012**(1)
1st NO/NC changeover AC in polyester enclosure ≥ 125 A	2799 **1001**(1)
2nd NO/NC changeover AC in polyester enclosure ≥ 125 A	2799 **1002**(1)

Side operation (factory fitted)

Contact (s)	Reference
2 NO/NC changeover AC in steel or polyester enclosure	2999 **1012**(1)

(1) Give the reference number of the enclosure to be equipped.

Pre-wired auxiliary contacts

cotf_178_a_1_cat

Use

For pre-breaking and signalling of positions 0 and I of the breaking switch.

Mounting

- On the double locking system.
- Possibility of factory mounting on enclosure (give enclosure reference when ordering).

References

Side operation

Contact (s)	Reference
2 NO/NC changeover AC in steel or polyester enclosure	3290 **6002**

Side operation (factory fitted)

Contact (s)	Reference
2 NO/NC changeover AC in steel or polyester enclosure	3290 **6102**(1)
2 low level NO/NC changeover AC in steel or polyester enclosure	3290 **6012**(1)

(1) Give the reference number of the enclosure to be equipped.

Red handle

cotf_181_a_1_cat

Use

For breaking or emergency stop.

References

Front operation (factory fitted)

Rating (A)	References
50 … 80	3211 **0080**(1)
125 … 500	3211 **0500**(1)
630 … 1600	3211 **1250**(1)

Side operation (factory fitted)

Rating (A)	References
50 … 80	3261 **0080**(1)
125 … 500	3211 **0500**(1)
630 … 1600	3211 **1250**(1)

(1) Give the reference number of the enclosure to be equipped.

This document is not a contract. SOCOMEC reserves the right to modify features without prior notice in view of continued improvement. 2008 - 2009

Accessories

Locking

cotf_205_c_1_cat

Use

Kit allowing the mounting of a RONIS EL11AP or Serv Trayvou XOP10 lock for right side operation of a SIDER 50 to 1600 A switch mounted in steel or polyester enclosure.

References

Padlockable in position 0

Lock type	References
EL11AP assembly kit supplied (lock not included)	3290 **7005**
XOP10 assembly kit supplied (lock not included)	3290 **7015**
RONIS EL11AP lock	4409 **8511**
Serv Trayvou XOP10 lock	4409 **8601**

Padlockable in position 0 (factory fitted)

Lock type	Reference
Kit supplied (lock not included)	3290 **7006**(1)(2)

(1) Give the reference number of the enclosure to be equipped.
(2) The key number is a random number can not be choosen by the customer. If you need a specific key number, please consult us.

Door closure

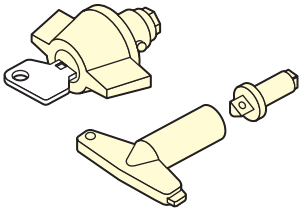

cotf_110_a_1_x_cat

Use

- On steel safety enclosure: 8 mm square key.
- On polyester enclosure: with screw or double 3 mm bar.

Optional

- 6 to 8 mm square key, 6.5 - 7 - 8 mm triangular key.
- Key locking (no. to specify).

References

Please consult us.

Ventilation, evacuation device, cable glands

cotf_216_a_1_cat

Use

- Water evacuation.
- Ventilation.
- Plastic and brass cable glands Ø 9 to 80 mm.

References

Please consult us.

Labelling

cotf_215_a_1_cat

Use

- Engraved dilophane label, fixed by rivets.
- Colour: white, red, black.
- Sizes: 65 x 20, 100 x 40 or 80 x 30 mm.

References

Please consult us.

Remote control auxiliary

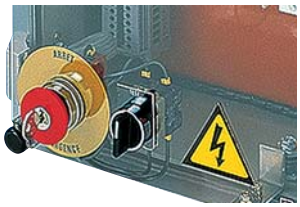

cotf_041_a_2_cat

Use

- On / Off pushbuttons, emergency stop.
- Measuring device.
- Signalling indicators.

References

Please consult us.

This document is not a contract. SOCOMEC reserves the right to modify features without prior notice in view of continued improvement. 2008 - 2009

ATEX enclosures

II2D - Ex tD A21 IP65 T85°C

Area 21 and 22 (dust) according to the ATEX 94/9/CE European Directive Category 2

coff_280_b_1_cat

Functions

ATEX enclosures equipped with SOCOMEC switches provide emergency breaking, breaking for mechanical maintenance and safety isolation in the vicinity of any low voltage final circuit installed in a explosive area.

They offer the following features:
- fully visible breaking,
- visible breaking,
- triple locking of the handle,
- double door locking for side operation,
- mechanical flag indicator.

Conformity to standards

- 94/9/CE Directive
- EN 50 281-1-1
- EN 50 281-1-2
- EN 50014
- EN 60204-1
- EN 60439-1
- EN 60695-2-11
- EN 60947-3
- NF C 15-100
- IEC 60364

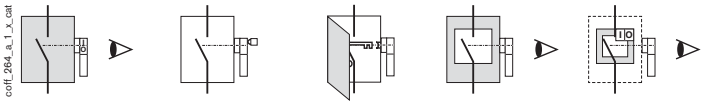

coff_264_a_1_x_cat

Steel enclosure

General characteristics

- *Adapted to mechanical hazards and dust environment.*
- *Load break switch: SIDER/SIDER ND with visible breaking and mechnical flag indicator.*
- *Handle: S type handle, red colour.*
- *Protection degree: IP65.*
- *Colour: metallic grey.*
- *Cable gland plate: bottom.*
- *Raw material: galvanised steel, thickness 2 mm.*
- *Coating: epoxy polyester powder.*
- *Wall mounting: 4 fixing lugs supplied loose.*
- *Locking system: 8 mm male square (key supplied). For lock, please consult us.*
- *Miscellaneous: earthing bolts, 2 internal points connections, top configuration, connection through busbar system (range > 80 A).*
- *Installation of push-buttons and signaling lights (1 to 4) on the right side of the enclosure: please consult us.*
- *Installation of push-buttons and signaling lights (1 to 2) on the front door of the enclosure: please consult us.*
- *Installation of plastic or brass cable glands: please consult us.*
- *Auxilary contact and push-button wired on terminal: please consult us.*

Connection

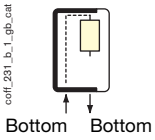

coff_231_b_1_gb_cat

References

Rating (A)	No. of poles	SIDER with side operation References
50	3 P	3V41 **3005**
50	4 P	3V41 **4005**
80	3 P	3V41 **3008**
80	4 P	3V41 **4008**
80	6 P	3V41 **6008**
125	3 P	3V51 **3012**
125	4 P	3V51 **4012**
160	6 P	3V51 **6020**
200	3 P	3V51 **3020**
200	4 P	3V51 **4020**
400	3 P	3V51 **3040**
400	4 P	3V51 **4040**
630	3 P	3V51 **3063**
630	4 P	3V51 **4063**

This document is not a contract. SOCOMEC reserves the right to modify features without prior notice in view of continued improvement. 2008 - 2009

Accessories

Cable glands ATEX

References

Black polyamide			Cable gland	Locknut
	Cable diameter			
Diameter (mm)	min. (mm)	max. (mm)	References	References
12	3.5	6	3240 **1012**	3240 **3012**
16	5	8	3240 **1016**	3240 **3016**
16	6	10	3240 **1017**	-
20	8	13	3240 **1020**	3240 **3020**
20	10	15	3240 **1021**	-
25	13	19	3240 **1025**	3240 **3025**
32	18	25	3240 **1032**	3240 **3032**
40	24	32	3240 **1040**	3240 **3040**
50	29	38	3240 **1050**	3240 **3050**

Crude brass			Cable gland	Locknut
	Cable diameter			
Diameter (mm)	min. (mm)	max. (mm)	References	References
10	1.5	5	3240 **2010**	3240 **4010**
12	4	8	3240 **2012**	3240 **4012**
16	6	11	3240 **2016**	3240 **4016**
20	7.5	13	3240 **2020**	3240 **4020**
25	12.5	18	3240 **2025**	3240 **4025**
32	17.5	25	3240 **2032**	3240 **4032**
40	24.5	33	3240 **2040**	3240 **4040**

Dimensions

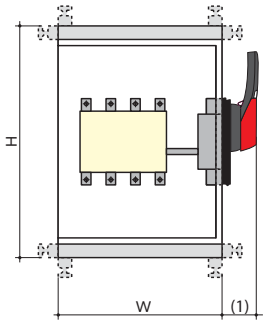

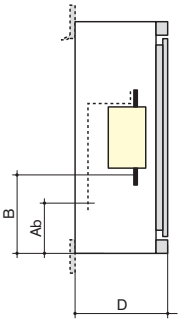

coff_289_b_1_gb_cat

50 … 400 A: 45 mm
630 A: 61 mm

Connection

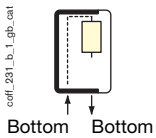

Side operation

Rating (A)	No. of poles	H x W x D (mm)	Max. cond. section	Ab	B	Weight (kg)
50	3/4 P	350 x 225 x 150	16	288	198	8.2
80	3/4 P	350 x 225 x 150	35	288	198	8.4
80	6 P	500 x 425 x 200	35	288	198	22.8
125	3/4 P	500 x 425 x 200	120	225	-	15
160	6 P	500 x 425 x 200	120	242	275	22.8
200	3/4 P	500 x 425 x 200	120	242	275	21.2
400	3/4 P	700 x 500 x 250	2 x 150	340	385	35.4
630	3/4 P	700 x 500 x 300	2 x 300	262	313	48

Please consult us for deliveries with accessories.

This document is not a contract. SOCOMEC reserves the right to modify features without prior notice in view of continued improvement. 2008 - 2009

Customised solutions

Examples of customised solutions, for more informations, please consult us.

Polyester enclosure

coff_145_c_2_cat

- Polycarbonate transparent cover.
- SIDER switch 3 x 50 A with mecanical flag indicator.
- Side operation.
- Lock and double interlocking device.
- ON/OFF pushbutton.
- Auxiliary contacts wired to terminals.

IP55 stainless steel enclosure

- SIDER switch 6 pole 50 A with mecanical pilot lamp.
- Specific locking SOUTHCO type.
- Ventilator and cable gland.

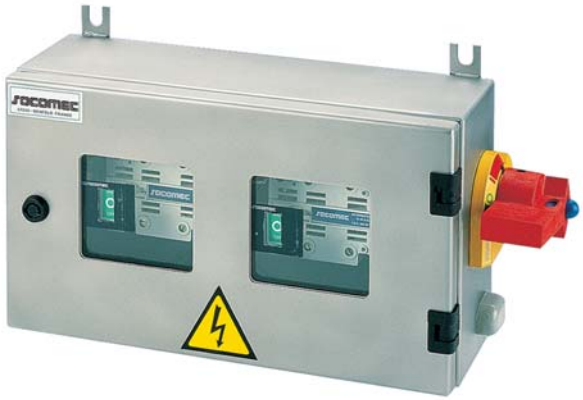

coff_040_a_2_cat

This document is not a contract. SOCOMEC reserves the right to modify features without prior notice in view of continued improvement. 2008 - 2009

Switching and protection enclosure

coff_045_a_1_cat

- Polyester or steel enclosure.
- FUSOMAT or FUSERBLOC visual breaking fuse disconnectors.
- From 250 to 630 A.
- Double locking.

Low voltage main panel - fuse protection

tablo_006_a_2_cat

- Entering: 2 SIDERMAT combination 4 x 1250 A.
- Outgoing: FUSOMAT switch.
- DIRIS protection.
- DIRIS energy management and measurement.

This document is not a contract. SOCOMEC reserves the right to modify features
without prior notice in view of continued improvement. 2008 - 2009

SELECTION GUIDE

REACTIVE ENERGY COMPENSATION

APPLICATIONS

Compensation battery equipped with capacitors:	Fixed COSYS standard	Fixed COSYS long life
Fixed power factor correction system	●	●
Semi-automatic power factor correction system		
Automatic power factor correction system		

CHARACTERISTICS

POWER		
Harmonic level: ha	2.5 to 120 kvar	
Harmonic level: hb	1.45 to 127.7 kvar	•
Harmonic level: hc	7.5 to 45 kvar	•
Harmonic level: hd	20 kvar	•

PAGES

Consult us | Consult us

This document is not a contract. SOCOMEC reserves the right to modify features without prior notice in view of continued improvement. 2008 - 2009

picto_108_a_gb

Services +
> Audit
> Setting up
> Training
See page IV

SOCOMEC offers a complete range of **reactive energy compensation system**, from large power compensation battery to pre-equipped rack while passing by the controller.

	Automatic COSYS standard	Automatic COSYS long life	COSYS racks pre-equipped	COSYS power factor correction relays
	cosys_113_b_2_cat		cosys_130_a_3_cat	cosys_135_b_1_cat
	●	●	●	●
	7.5 to 1100 kvar		20 to 100 kvar	
	30 to 825 kvar	•	15 to 105 kvar	
	7.5 to 900 kvar	•	25 to 50 kvar	
	20 to 720 kvar	•	20 to 40 kva	
	Consult us	Consult us	Consult us	see page C.20

This document is not a contract. SOCOMEC reserves the right to modify features without prior notice in view of continued improvement. 2008 - 2009

COSYS power factor correction relays

cosys_140_b_1_x_cat

COSYS 4a

1. 3 digit, 7 segment LED display.
2. LED indicating type of load detected.
3. LED indication of measurement on the display.
4. 4 membrane key keypad access to controller functions.
5. LED indication of steps enabled.
6. LED indication of alarms.
7. LED indication of operation selected.

cosys_141_b_1_x_cat

COSYS 7a

1. 3 digit, 7 segment LED display.
2. LED indicating type of load detected.
3. LED indication of measurement on the display.
4. 4 membrane key keypad access to controller functions.
5. LED indication of steps enabled.
6. LED indication of alarms.
7. LED indication of operation selected.

Functions

The **COSYS power factor correction relays** are intelligent microprocessor regulators that measure reactive power on 4 quadrants and provide automatic interlocking of the capacitors according to the cos phi.

Conformity to standards

- IEC 61000-4
- IEC 61255
- IEC 61414
- IEC 61348
- EN 50082-1
- EN 50082-2
- EN 61010

Applications

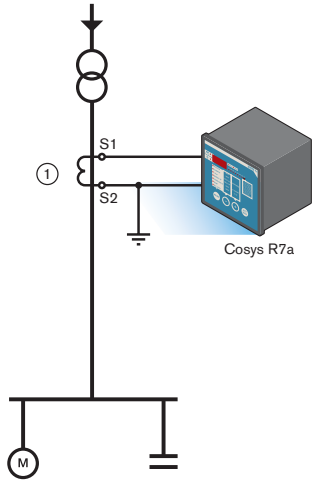

cosys_042_d_1_x_cat

1. Current transformers

These products, from the keyboard and the display, allow you to configure:
- the current transformer ratio,
- the rated current of the first capacitor,
- the connection programme based on a principle allowing you to lengthen the service life of the installation. In fact, the regulator chooses to connect directly the step adapted to the correction (Prog),
- the selected cos phi (0.8 L to 0.8 C) (cos φ),
- the connection time between each battery (5 to 600 seconds),
- the safety time for the discharging of the capacitor (5 to 240 seconds) Ts (s),
- the number of capacitors used ┤Nb├ .

To facilitate its use, the cos phi (L or C), the current (A) and the rate of harmonic distortion (%) are visualised by means of the display.

The 4a, 6a and 7a series regulators are equipped with an alarm relay.

This document is not a contract. SOCOMEC reserves the right to modify features without prior notice in view of continued improvement. 2008 - 2009

References

	COSYS 4a	COSYS 6a	COSYS 7a
Number of relays	Reference	Reference	Reference
4 output relays and 1 alarm relay	4800 **0011**		
6 output relays and 1 alarm relay		4800 **0012**	
7 output relays and 1 alarm relay			4800 **0013**

Electrical characteristics

Measurement

Current (TRMS)

CT primary	5 … 9990 A
CT secondary	5 A (1 A on request)
Measurement range	0.125 … 6 A
Input consumption	0.65 W
Insulation voltage	3.3 kV
Accuracy	+/- 1 %

Voltage (TRMS)

Direct measurement between phases	380 … 415 VAC
Insulation voltage	3.3 kV
Accuracy	+/- 1 %

Power factor

Measurement range	0.8 cap ... 0.8 ind
Accuracy	+/- 0.75 %

Frequency

Measurement range	50/60 Hz +/- 1 %

Auxiliary power supply

AC voltage	380 … 415 VAC
Tolerance	-15 … + 10 %
Frequency	50 / 60 Hz
Consumption	6 VA

Outputs

Number	5 … 8
Type	5 A - 250 VAC
Max. number of operations	4 x 10^5

Operating conditions

Operating temperature	-20 … +60 °C
Storage temperature	-20 … +80 °C
Relative humidity	< 90 %

Overall dimensions

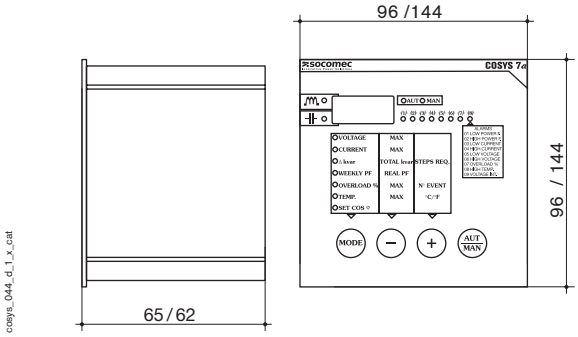

Type	flush-type
Dimensions W x H x D	96 x 96 x 65 mm (1) / 144 x 144 x 62 mm (2)
Case protection rating	IP31
Front protection rating	IP54
Display type	digits
Terminal block type	pull-out
Connection section	≤ 2.5 mm²
Weight	440 g (1) / 740 g (2)

(1) COSYS 4a and 6a.
(2) COSYS 7a.

Terminal connections

- **COSYS 4a - 6a**

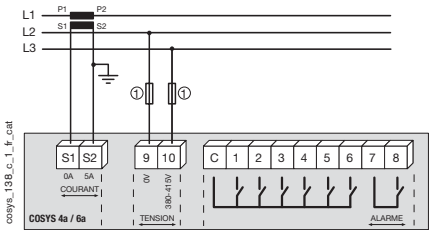

- **COSYS 7a**

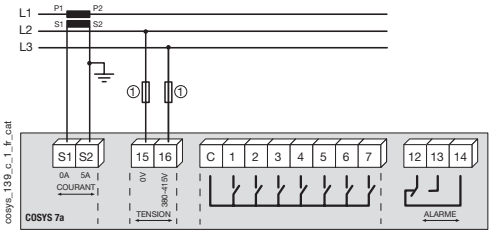

Note: *Voltage and current connection.*
In case of bad current transformer connection, the controller detects an abnormal condition, then a flashing alarm code is displayed. A simple modification of the current transformer connection recognition parameter solves the problem. No need to correct wiring in the case of bad current transformer connections".

This document is not a contract. SOCOMEC reserves the right to modify features without prior notice in view of continued improvement. 2008 - 2009

SELECTION GUIDE

EMPTY ENCLOSURES

INSULATED ENCLOSURES

combi_001_a_4_cat

minip_003_a_2_cat

maxip_027_a_2_cat

APPLICATIONS

	COMBIESTER	MINIPOL	MAXIPOL
LV main panels			
Section distribution			
Terminal distribution	●	●	●
Subtransmission	●		
Monitoring and control		●	●

CHARACTERISTICS

Polyester enclosure	•	•	•
Steel enclosure			
Steel cabinet			
Monobloc steel control desk			
Modular steel control desk			
Degree of protection	IP66	IP66	IP55
Dimensions H x W x D (mm)	From 180 x 135 x 129 to 720 x 540 x 201	From 300 x 200x 140 to 800 x 600 x 300	From 500 x 500 x 312 to 1000 x 1000 x 412
PAGES	see page C.24	Consult us	Consult us

This document is not a contract. SOCOMEC reserves the right to modify features without prior notice in view of continued improvement. 2008 - 2009

SOCOMEC is a specialised manufacturer offering a complete range of **enclosures** that meet all industrial and tertiary needs relating to:

- protection against external influences,
- the upgradeability of the installation according to changing needs,
- appearance.

All these products are designed to optimise installation times.

STEEL ENCLOSURES

NEW

kdys_419_a_3_cat

kdys_504_a_1_cat

kdys_418_a_3_cat

kdys_357_a_2_cat

kdys_360_a_2_cat

CADRYS enclosures	CADRYS monobloc	CADRYS DELTA modular	CADRYS SBA	CADRYS AE
		●		
		●		
●	●			
●				
			●	●
•				
	•	•		
			•	
				•
IP65	IP55	IP55	IP55	IP55
From 200 x 200 x 150 to 1200 x 1000 x 300	From 1400 x 800 x 400 to 2000 x 1600 x 500	From 1600 x 400 x 400 to 2200 x 1600 x 800	From 1000 x 600 x 400 to 1000 x 1200 x 500	From 970 x 600 x 400 to 1400 x 1600 x 500
see page C.25	Consult us	see page C.26	Consult us	Consult us

This document is not a contract. SOCOMEC reserves the right to modify features without prior notice in view of continued improvement. 2008 - 2009

COMBIESTER

combi_038_a_1_cat

combi_001_a_1_cat

Functions

COMBIESTERs are modular insulated enclosures.
They protect all low voltage electrical equipment against direct contacts.

Conformity to standards

- IEC 60439-1
- IEC 60529
- NF C 20010
- NF C 20455
- DIN 40050

Available on request

- Pre-drilled casing and cover.
- Pres-assembled enclosures.
- Pre-mounted accessories.
- Construction of support frames.

The range

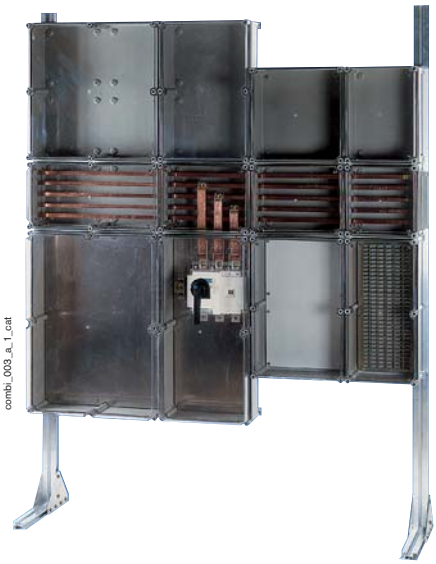

combi_003_a_1_cat

These envelopes provide:
- an electrical safety with:
  - double insulation,
  - good resistance to currents creepage distance.
- an IP66, IK9 degree of protection,
- an excellent standing to climatic conditions,
- a good standing to chemical agents,
- a 960°C self-extinguishable ability (polyester glasswool loaded),
- a 850°C self-extinguishable ability (for polycarbonate),
- a 650°C self-extinguishable ability (for polyamide),
- basin and cover with opaque colour RAL 7035.

Monobloc enclosures
- 4 modules with sizes: 125 x 75 mm to 250 x 175 mm.
- 2 types of covers in polycarbonate:
  - transparent,
  - opaque.
- Solid casing in polycarbonate (with cover on request).

Assemblable enclosures
- 17 assemblable modules every 90 mm for sizes 180 x 135 mm and 720 x 540 mm.
- 2 types of sealable covers
  - transparent (polycarbomate),
  - opaque (polycarbonate or polyester).
- Solid casing or with openings:
  - in polyamide for sizes 180 x 135 mm and 270 x 135 mm,
  - in polyester for sizes 270 x 180 mm to 720 x 540 mm.

This document is not a contract. SOCOMEC reserves the right to modify features without prior notice in view of continued improvement. 2008 - 2009

CADRYS enclosures

Functions

CADRYS ST, SH, SP and **SI** wall-mounted enclosures are intended to accept automatic or control equipment.

They provide:

- degree of protection IP65 (except double-leaf door enclosure, IP55).
- perfect sealing:
  - casing edge in channel form,
  - robot positioning polyurethane joint.
- high rigidity provided by a folded and welded casing.
- good resistance to chemical agents:
  - carbon steel FE 40 + polyester epoxy paint 70 µ,
  - stainless steel 304 L brushed and polished.
- high and low closing plates for ST and SP enclosures.

CADRYS CR enclosure provide:

- a 19” modular format,
- a IP55 degree protection,
- a 19” pivoting board rack support.

Conformity to standards

- IEC 60439-1
- EN 60439-1
- NF C 15-100

Available on request

- Special paint.
- Specific cutouts (enclosures, plates...).
- Specific dimensions.

The range

CADRYS ST/SH enclosures, steel

- 51 models, heights from 300 to 1200 mm, widths from 200 to 1000 mm and depths from 150 to 400 mm.
- 1 or 2 solid doors opening to 120°.

CADRYS SP enclosures, steel

- 17 models, heights from 500 to 1200 mm, widths from 400 to 800 mm and depths from 250 and 400 mm.
- Casing with polyester paint RAL 7035.
- Transparent door with frame with polyester epoxy paint RAL 6022.

The basic **CADRYS ST** and **SP** enclosures are equipped with:

- double bar locking,
- bottom closing plate with pressed neoprene seal,
- concealed hinges,
- earthing screw,
- door profiles perforated every 25 mm,
- casing and solid door, steel, polyester epoxy paint RAL 7035,
- reversible doors.

CADRYS SI enclosures, brushed stainless steel

- 9 models, heights from 200 to 1000 mm, widths from 200 to 800 mm and depths from 150 to 300 mm.
- Solid door, double bar locking, concealed hinges, without closing plate.

This document is not a contract. SOCOMEC reserves the right to modify features without prior notice in view of continued improvement. 2008 - 2009

CADRYS DELTA modular

kdrys_418_a_1_cat

Functions

CADRYS DELTA enclosures are modular steel enclosures.
They are intended to accept automation or electrical equipment.
They can be placed side by side, back to back and side to back.
They can be delivered ready-assembled or, on request, in kit form.

Conformity to standards

- IEC 60529
- IEC 60439-1
- NF C 15-100
- NF C 20010
- Protection rating IP 55, IK 10

Approvals and certifications

- PSA E03.15.605.G
- RENAULT EB03.15.613

The range

- 4 heights 1600, 1800, 2000, 2200 mm.
- 7 widths 300, 400, 600, 800, 1000, 1200 and 1600 mm.
- 4 depths 400, 500, 600 and 800 mm.
- 96 models available in the following standard presentations:
  - enclosure with transparent front door, dismountable rear panel,
  - enclosure with solid front and rear doors.
- In its basic version, the enclosure is equipped with framework, front door, rear pannel (or door) and the top panel.
- It is supplied on a handling pallet.
- Colour RAL 7035.

Available on request

- Canopies.
- Drillings.
- Special colours an paints.
- Doors, panels of 2 mm.
- Specific dimensions.
- Adaptations as per drawings.
- Aluminium or painted stainless steel doors and panels.

This document is not a contract. SOCOMEC reserves the right to modify features without prior notice in view of continued improvement. 2008 - 2009

1. Framework in welded 17.5/10 mm steel with double perforation every 25 mm.
2. Casing in folded, welded 12/10 mm steel. Structured finish powders polyester, colours RAL 7035.
3. Solid or transparent door in 15/10 mm steel with single or double wings depending on the width of the enclosure. Single-wing enclosures have left/right reversible doors requiring no tools.
4. CNOMO (option) automatic locking handle with standard interchangeable double bar key lock.
5. Bottom plate of enclosure in 1.5 mm steel with central opening.
6. Removable roof made of 12/10 mm steel with possibility of a bus bar set box.
7. The frame elements are assembled by screwing onto a tripod.

This document is not a contract. SOCOMEC reserves the right to modify features without prior notice in view of continued improvement. 2008 - 2009

CADRYS DELTA modular

External options

Tripod

The frame elements are assembled by screwing onto a tripod.

kdrys_304_a_1_cat

Busbar housing

- Fits in between the top panel and the top of the cubicle.
- Takes bars up to 160 mm high.

kdrys_426_a_1_cat

Side panels

- Thanks to a special anchoring system, the side and back panels are easily mounted.
- The side panel can be replaced by a door without the addition or removal of any accessories.

kdrys_423_a_1_cat

kdrys_428_a_1_cat

Back panel

The back panel can be replaced by a door without the addition or removal of any accessories.

kdrys_432_a_2_cat

kdrys_418_a_1_cat

Door

The door can be reversed without removing the handle or hinges in 3 easy steps:

1. Remove the hinge pins.
2. Reversing of the door.
3. Replace the hinge pins.

kdrys_429_a_1_cat

1

kdrys_430_a_1_cat

2

kdrys_431_a_1_cat

3

Handle

- An ergonomic automatic locking handle that does not require the use of a key. This handle cannot be locked with the door open (CNOMO system).
- When the door is reversed, it is not necessary to remove the handle.

kdrys_253_a_1_cat

Bases

- The bases have 4 removable sides made of folded 1.2 mm steel. the angle pieces are 3 mm steel reinforced by welding.
- They are designed to allow several bases to be stacked so as to obtain the height required.

kdrys_406_a_1_cat
kdrys_407_a_1_cat

Juxtaposition

The juxtaposition of cubicles side or back to back is achieved using a kit that guarantees IP55 sealing.

kdrys_427_a_1_cat

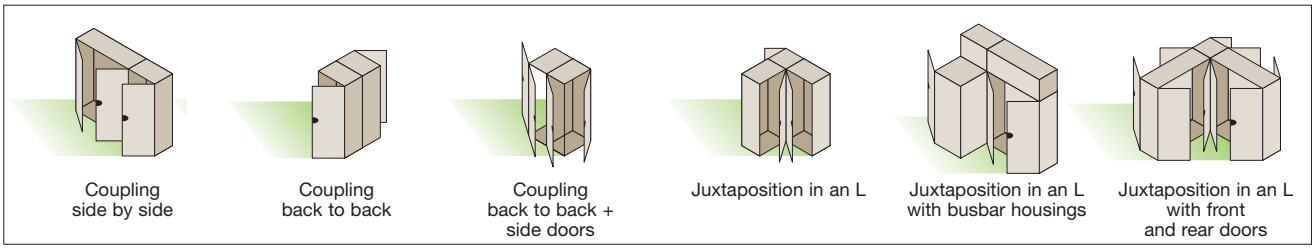

kdrys_339_b

This document is not a contract. SOCOMEC reserves the right to modify features without prior notice in view of continued improvement. 2008 - 2009

Internal options

Perforated plate

- The placing of the plates is facilitated by an anchoring system.
- No intermediate pieces are needed to fix them in place.

Mounting profiles

The perforations in these profiles allow the positioning of the nuts every 25 mm or continuously.

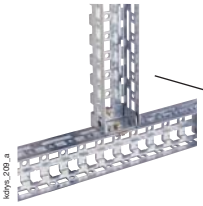
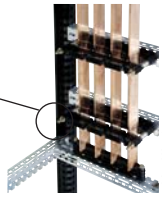

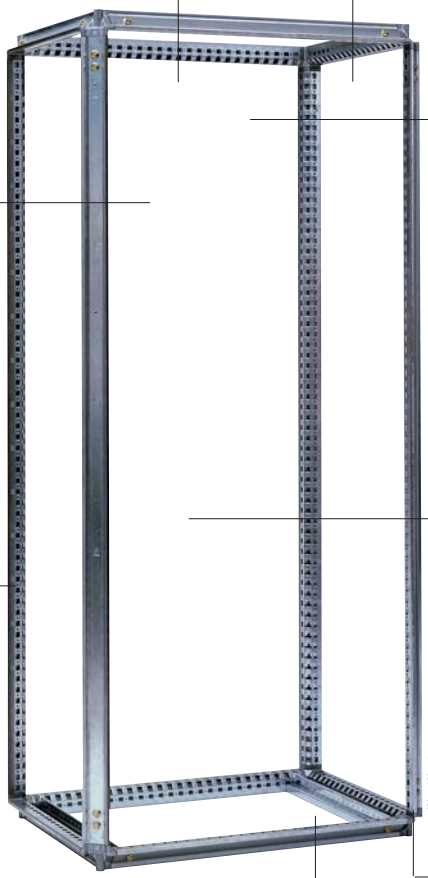

Notched mounting profiles

- These facilitate the positioning of the nuts and provide support during assembly.
- These provide good slip resistance, particularly in the event of vibration during transport.

Solid plate

A system of slides and clips facilitated the positioning of the plates and holds them in place during assembly.

Internal door

- This allows the mounting of control auxiliaries and measuring devices protected by a solid or transparent front door.
- It is fixed onto the frame and can be depth-adjusted at a pitch of 25 mm.

Nuts

The clip-on nuts fit onto the mounting profiles and perforated plates whilst also providing earthing.

Structural profiles

- In 1.75 mm steel double perforated every 25 mm so as to allow made-to-measure dimensions.
- These profiles allow the direct mounting of SOCOMEC SBC 10 and 20 bar supports.

Gland plate

- The closing plate is fixed in place by a knurled nut.
- It is tightened manually with no tools required.

This document is not a contract. SOCOMEC reserves the right to modify features without prior notice in view of continued improvement. 2008 - 2009

SELECTION GUIDE

MOUNTING AND CABLING ACCESSORIES

APPLICATIONS

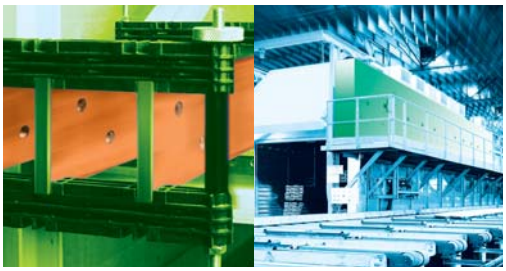

	amc_001_a_1_cat Rigid copper bars	barre_011_a_3_cat Insulated flexible copper bars	sb_061_a_1_cat 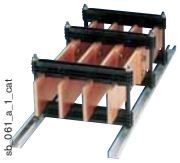 Busbar supports	sb_128_a_3_cat Mechanical systems software
Main busbar realisation	●		●	●
Busbar for outgoing realisation	●	●	●	●
Distribution systems	●		●	●
Connection systems				
Guidance, fixing and protection of beams of cables				
Construction of structures and frames for mounting equipment				
PAGES	see page C.32	see page C.34	see page C.36	see page C.60

This document is not a contract. SOCOMEC reserves the right to modify features without prior notice in view of continued improvement. 2008 - 2009

SOCOMEC's range of **mounting and cabling accessories** are used for the installation of electrical equipment in enclosures.
For all types of applications, these products guarantee optimum conditions of operation and safety.

repar_027_a_3_cat	auxig_008_a_3_cat 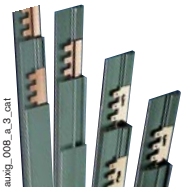	born_016_a_2_cat	serre_005_a_1_cat acces_027_a_1_cat	goulo_029_a_2_cat	bloca_004_a_2_cat	elcha_002_a_2_cat
Distribution blocks	**Distribution busbar**	**Power terminals**	**Cable clamps and cage terminal**	**Cable trunking**	**BLOCAL aluminium systems**	**Mounting rails and profiles**
●	●					
		●	●			
				●		
					●	●
see page C.62	Consult us	see page C.68	Consult us	Consult us	see page C.70	see page C.71

This document is not a contract. SOCOMEC reserves the right to modify features without prior notice in view of continued improvement. 2008 - 2009

Rigid copper bars

Rigid copper bars
Insulated flexible copper bars
Busbar supports
Mechanical systems software
Distribution blocks
Power terminals
BLOCAL aluminium systems
Mounting rails and profiles

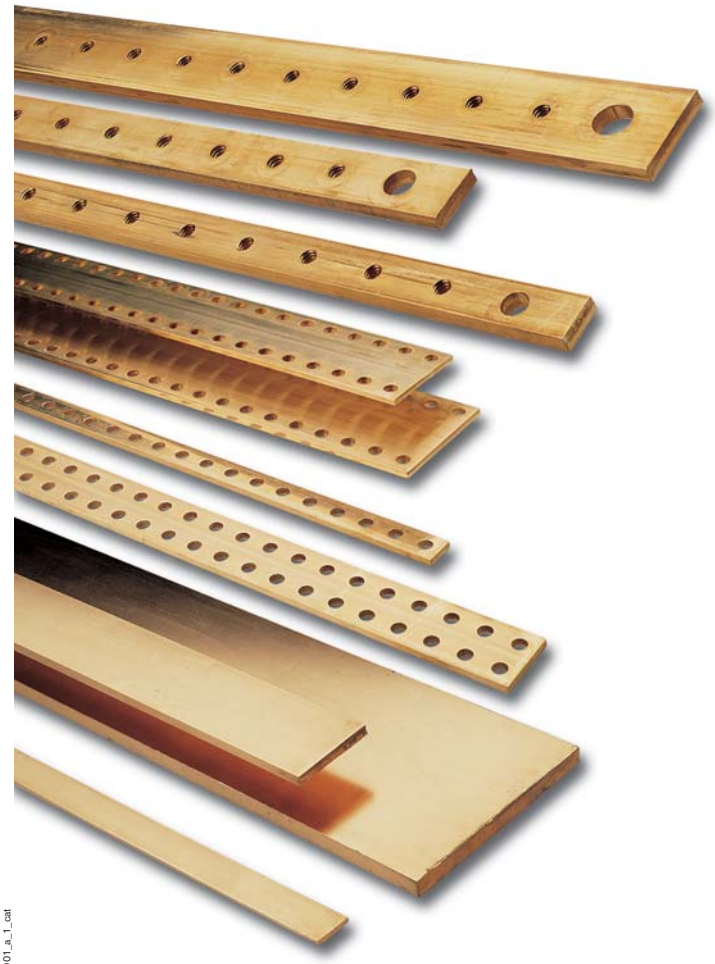

bars_001_a_1_cat

Functions

The SOCOMEC **copper bars** make it possible to carry out main or distribution busbars.

The range

Solid bars
- Thickness: 4, 5 and 10 mm.
- Width: 20 to 160 mm.
- Length: 1750, 2900, 5800 mm.

Pre-punched bars
- Thickness: 5 and 10 mm.
- Width: 25 to 125 mm.
- Length: 1750 mm.

Pre-punched and threaded bars
- Thickness: 5 mm.
- Width: 15 to 32 mm.
- Length: 990 mm.

Earth / Neutral connection
- Angle profile for Earth / Neutral connection, L = 1750 mm.
- Earth bar, L = 470 mm and L = 120 mm.

General characteristics of copper

- Material: electrolytic copper Cu-ETP (Cu/A1).
- State: hammer-hardened 1/2 hard (H12).
- Maximum resistivity: 0.017241 $\Omega mm^2/m$ at 20°C.

Selection guide

• Edgewise mounting

Bar section l x e (mm)	Number of bars per phase I	II	III	IIII
20 x 4	240	430	600	750
15 x 5	220	390	540	650
25 x 5	330	590	800	1000
32 x 5	410	700	1000	1250
40 x 5	500	850	1200	1500
50 x 5	600	1050	1450	1850
63 x 5	700	1250	1800	2250
80 x 5	900	1550	2200	2750
100 x 5	1100	1900	2650	3350
125 x 5	1300	2350	3250	4100
30 x 10	600	1050	1450	1800
50 x 10	850	1550	2150	2700
80 x 10	1300	2300	3200	4000
100 x 10	1550	2750	3850	4850
125 x 10	1900	3350	4650	5900
160 x 10	2350	4150	5800	7300

• Flat mounting

Bar section l x e (mm)	Number of bars per phase I	II	III	IIII
20 x 4	210	340	460	570
15 x 5	190	310	420	510
25 x 5	280	470	600	750
32 x 5	350	580	750	950
40 x 5	420	700	900	1150
50 x 5	510	850	1100	1400
63 x 5	620	1000	1350	1700
80 x 5	750	1250	1700	2100
100 x 5	900	1500	2050	2550
125 x 5	1100	1850	2500	3050
30 x 10	490	800	1100	1350
50 x 10	750	1200	1650	2050
80 x 10	1100	1800	2450	3000
100 x 10	1350	2200	2950	3650
125 x 10	1600	2700	3600	4400
160 x 10	2000	3300	4450	5500

• Solid bars

Determination of the current capacity Iz (A) for solid blank copper bars, in usual condition of use (T° ambient 45°, heating of the bars 35°, frequenz 50 Hz).

• Pre-punched copper bars

For the pre-punched bars of same dimensions as the solid bars:
pre-punched Iz = 0.9 Iz solid.

• Aluminium bars

For the aluminium bars of same dimensions as the solid bars:
Iz aluminium = 0.78 Iz solid copper.

This document is not a contract. SOCOMEC reserves the right to modify features without prior notice in view of continued improvement. 2008 - 2009

References

• Solid bars

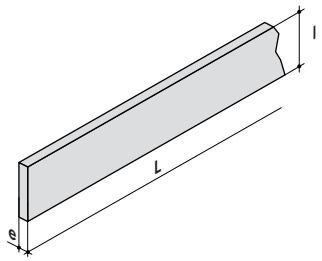

barre_002_a_1_x_cat

		L = 1750 mm	L = 2900 mm	L = 5800 mm
			Pack qty	
		1 bar	1 bar	5 or 10 bars
l x e (mm)	Weight (kg/ml)	References	References	References
20 x 4	0.71	4510 **2004**	4513 **2004**	4514 **2004**(1)
25 x 5	1.11	4510 **2505**	4513 **2505**	4514 **2505**(1)
32 x 5	1.42	4510 **3205**	4513 **3205**	4514 **3205**(1)
40 x 5	1.78	4510 **4005**	4513 **4005**	4514 **4005**(1)
50 x 5	2.22	4510 **5005**	4513 **5005**	4514 **5005**(1)
63 x 5	2.80	4510 **6305**	4513 **6305**	4514 **6305**(1)
80 x 5	3.56	4510 **8005**	4513 **8005**	4514 **8005**(2)
100 x 5	4.45	4510 **9005**	4513 **9005**	4514 **9005**(2)
125 x 5	5.56	4510 **9205**	4513 **9205**	4514 **9205**(2)
30 x 10	2.67	4510 **3010**	4513 **3010**	4514 **3010**(2)
50 x 10	4.45	4510 **5010**	4513 **5010**	4514 **5010**(2)
80 x 10	7.11	4510 **8010**	4513 **8010**	4514 **8010**(2)
100 x 10	8.89	4510 **9010**	4513 **9010**	4514 **9010**(2)
125 x 10	11.11	4510 **9210**	4513 **9210**	4514 **9210**(2)
160 x 10	14.22	4510 **9610**	4513 **9610**	4514 **9610**(2)

(1) Pack qty 10 bars.
(2) Pack qty 5 bars.

• Pre-punched bars

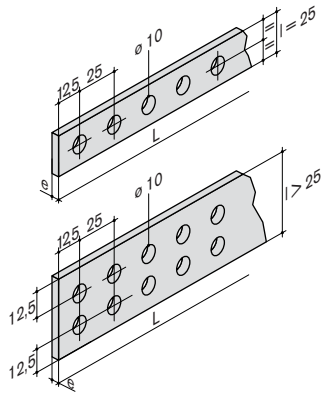

barre_003_a_1_x_cat

l x e (mm)	L (mm)	Weight (kg/ml)	No. of rows	Pack qty	References
25 x 5	1750	1.11	1	5	4511 **2505**
50 x 5	1750	2.22	2	5	4511 **5005**
63 x 5	1750	2.80	2	5	4511 **6305**
80 x 5	1750	3.56	2	5	4511 **8005**
100 x 5	1750	4.45	2	5	4511 **9005**
125 x 5	1750	5.56	2	5	4511 **9205**
50 x 10	1750	4.45	2	5	4511 **5010**
80 x 10	1750	7.11	2	5	4511 **8010**
100 x 10	1750	8.89	2	5	4511 **9010**
125 x 10	1750	10.70	2	5	4511 **9210**

• Pre-punched and threaded bars

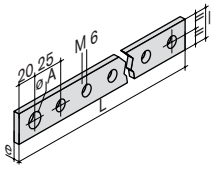

barre_004_a_1_x_cat

l x e (mm)	L (mm)	Weight (kg/ml)	Ø A (mm)	Pack qty	References
15 x 5	990	0.67	8.2	5	4512 **1505**
20 x 5	990	0.89	10.2	5	4512 **2005**
32 x 5	990	1.42	12.2	5	4512 **3205**

This document is not a contract. SOCOMEC reserves the right to modify features without prior notice in view of continued improvement. 2008 - 2009

Insulated flexible copper bars

Rigid copper bars
Insulated flexible copper bars
Busbar supports
Mechanical systems software
Distribution blocks
Power terminals
BLOCAL aluminium systems
Mounting rails and profiles

barre_011_a_1_cat

Functions

SOCOMEC **flexible copper bars** are mainly used to make the links between series of distribution bus bars and the disconnection devices.

Conformity to standards

- VDE 207 Y16
- VDE 207 YM4
- BS 6746
- DIN 40050
- NF A 51-050

General characteristics

- Width of 9 to 100 mm.
- Thickness of 0.8 to 1 mm.
- Length of 2 m.

Ease of positioning

- Reduced space covering.
- Wide flexibility of the bus bar.
- Time saving by elimination of terminals and their clinching.

Increased safety by the elimination of connections

- Better behaviour in short-circuits.
- Decrease of heating ponts.
- Better protection of people.

Available on request

- Other lengths: please consult us.
- Bars in tin-plated copper or aluminium.
- Halogen-free insulation.

Technical characteristics

Conductor

Strips of electrolytic copper Cu/ETP, FINAL ANNEALING state.

Insulated flexible busbar

- Operating temperature: from -40°C to +105°C.
- Maximum operating voltage: 1000 VAC / 1500 VDC.
- Alternative voltage withstand (10-min test):
  - between core and insulation: 16.5 kV,
  - between two insulating elements in contact: 33 kV.
- Conductivity: 100 % IACS.
- HC < 50.
- Resistance to traction Rm > 200 N/cm^2.
- Elongation after rupture 35 %.
- Resistivity: 1.724 micro (Omega) /cm at 20°C.

Insulator

High temperature co-extruded vinyl compound on the copper strips (insulation thickness: 1.5 to 2 mm).

- Self-extinguisher: NFC 32200.
- Continuous temperature withstand: 105°C.
- Shore hardness A: 89 +/- 2.
- Module 100 % elongation: 16 Mpa.
- Resistance to elongation: 15 % min.
- Breaking stress: 20 Mpa.
- Transversal volume resistivity: 6.10^{15} Ω.
- Oxygen index: 29.5 %.
- Scratch and tear resistant.

This document is not a contract. SOCOMEC reserves the right to modify features without prior notice in view of continued improvement. 2008 - 2009

References

barre_011_a_2_cat

barre_008_a_1_x_cat

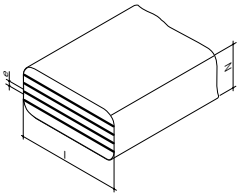

• **Bar length: 2 m**

Admissible currents (A) per bar for a temp. rise of (°C)[1]

l x N x e (mm)	40 °C (A)[2]	50 °C (A)	60 °C (A)	References
9 x 2 x 0.8	113	129	143	4518 **0902**[2]
9 x 3 x 0.8	140	160	178	4518 **0903**[2]
9 x 4 x 0.8	165	188	209	4518 **0904**[2]
9 x 5 x 0.8	187	214	238	4518 **0905**[2]
9 x 6 x 0.8	208	238	264	4518 **0906**[2]
13 x 2 x 0.5	115	131	146	4518 **1302**[2]
13 x 3 x 0.5	142	162	180	4518 **1303**[2]
13 x 4 x 0.5	165	189	210	4518 **1304**[2]
13 x 5 x 0.5	186	213	237	4518 **1305**[2]
13 x 6 x 0.5	206	235	261	4518 **1306**[2]
15.5 x 2 x 0.8	167	191	212	4518 **1502**[2]
15.5 x 3 x 0.8	207	237	263	4518 **1503**[2]
15.5 x 4 x 0.8	242	277	308	4518 **1504**[2]
15.5 x 6 x 0.8	304	347	386	4518 **1506**[2]
15.5 x 8 x 0.8	358	409	455	4518 **1508**[2]
15.5 x 10 x 0.8	408	466	519	4518 **1510**[2]
20 x 2 x 1	228	261	290	4518 **2002**[2]
20 x 3 x 1	283	324	360	4518 **2003**[2]
20 x 4 x 1	331	378	421	4518 **2004**[2]
20 x 5 x 1	374	428	476	4518 **2005**[2]
20 x 6 x 1	415	474	527	4518 **2006**[2]
20 x 8 x 1	488	558	621	4518 **2008**[2]
20 x 10 x 1	556	635	705	4518 **2010**[2]
24 x 2 x 1	263	301	335	4518 **2402**[2]
24 x 3 x 1	326	373	414	4518 **2403**[2]
24 x 4 x 1	380	435	483	4518 **2404**[2]
24 x 5 x 1	429	491	546	4518 **2405**[2]
24 x 6 x 1	475	542	603	4518 **2406**[2]
24 x 8 x 1	557	636	708	4518 **2408**[2]
24 x 10 x 1	632	722	803	4518 **2410**[2]
32 x 2 x 1	331	379	421	4518 **3202**[2]
32 x 3 x 1	409	468	520	4518 **3203**[2]
32 x 4 x 1	476	544	605	4518 **3204**[2]
32 x 5 x 1	536	612	681	4518 **3205**[2]
32 x 6 x 1	591	675	751	4518 **3206**[2]
32 x 8 x 1	689	787	876	4518 **3208**[2]
32 x 10 x 1	777	887	987	4518 **3210**[2]

Admissible currents (A) per bar for a temp. rise of (°C)[1]

l x N x e (mm)	40 °C (A)	50 °C (A)	60 °C (A)	References
40 x 2 x 1	398	455	506	4518 **4002**[3]
40 x 3 x 1	490	560	623	4518 **4003**[3]
40 x 4 x 1	569	650	723	4518 **4004**[3]
40 x 5 x 1	639	730	812	4518 **4005**[3]
40 x 6 x 1	703	803	893	4518 **4006**[3]
40 x 8 x 1	815	932	1036	4518 **4008**[3]
40 x 10 x 1	915	1045	1163	4518 **4010**[3]
50 x 3 x 1	589	673	749	4518 **5003**[3]
50 x 4 x 1	682	780	867	4518 **5004**[3]
50 x 5 x 1	764	873	971	4518 **5005**[3]
50 x 6 x 1	838	957	1062	4518 **5006**[3]
50 x 8 x 1	967	1105	1229	4518 **5008**[3]
50 x 10 x 1	1080	1234	1373	4518 **5010**[3]
63 x 3 x 1	715	816	908	4518 **6303**[3]
63 x 4 x 1	825	943	1048	4518 **6304**[3]
63 x 5 x 1	921	1052	1171	4518 **6305**[3]
63 x 6 x 1	1041	1187	1324	4518 **6306**[3]
63 x 8 x 1	1157	1321	1470	4518 **6308**[3]
63 x 10 x 1	1286	1469	1634	4518 **6310**[3]
80 x 3 x 1	874	998	1110	4518 **8003**[3]
80 x 4 x 1	1006	1149	1278	4518 **8004**[3]
80 x 5 x 1	1119	1279	1422	4518 **8005**[3]
80 x 6 x 1	1220	1393	1550	4518 **8006**[3]
80 x 8 x 1	1393	1592	1771	4518 **8008**[3]
80 x 10 x 1	1543	1763	1961	4518 **8010**[3]
100 x 4 x 1	1211	1383	1538	4518 **9004**[3]
100 x 5 x 1	1343	1534	1707	4518 **9005**[3]
100 x 6 x 1	1460	1668	1855	4518 **9006**[3]
100 x 8 x 1	1660	1897	2110	4518 **9008**[3]
100 x 10 x 1	1833	2094	2329	4518 **9010**[3]

l: laminate width in mm
N: number of laminate
e: laminate thickness in mm

(1) For a ambient temperature of 40°C - Important: maximum temperature of the bar = 105° C.
(2) Pack qty: 4.
(3) Pack qty: 2.

Assembly instructions

amc_017_a_1_x_cat

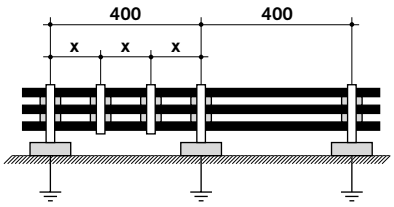

Icc maxi (kA eff)	Distance x (mm)[1]
20	350
25	200
35	100
45	70

(1) 9 mm straps, 80 kg weight.

Flexible bars should be mounted on insulated supports with a maximum distance of 400 mm. Bars should also be held together with straps is given in the attached table (see board below). The distance between successive straps depends on the electro-dynamic constraints in the event of a short-circuit.

This document is not a contract. SOCOMEC reserves the right to modify features without prior notice in view of continued improvement. 2008 - 2009

Busbar supports

Rigid copper bars
Insulated flexible copper bars
Busbar supports
Mechanical systems software
Distribution blocks
Power terminals
BLOCAL aluminium systems
Mounting rails and profiles

sb_103_a_1_cat

Flat mounting: stand off support

sb_084_a_1_cat

Stair type support: SBE 44

sb_117_a_1_cat

Flat mounting: SB 205 - SB 306

sb_061_b_1_cat

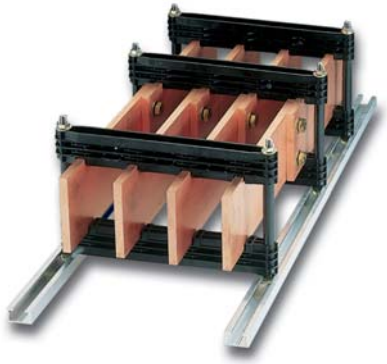

Edgewise mounting: SB C 10 - SB C 30

sb_123_a_1_cat

Flat mounting: SB P 30

sb_077_a_1_cat

Edgewise mounting: SB C 20

sb_170_a_1_cat

Flat mounting: SB P 44

sb_195_a_1_cat

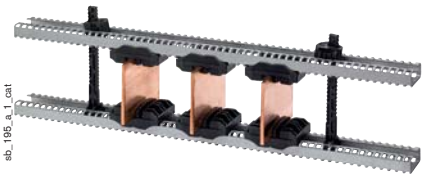

Edgewise mounting: SB C ER Power

Functions

SOCOMEC insulating **busbar supports** allow the fixation of a copper or aluminium bar or busbar.

Conformity to standards

- IEC 60439-1
- IEC 60865-1

Approvals and certifications(1)

- KEMA
- Lloyd's Register of Shipping
- ASEFA/LCIE

(1) According to supports.

General characteristics

Insulators
- Polyester **without halogene**.
- **UL94 VO** self-extingishable.
- Colour: red RAL 3002.
- Operating temperature from - 40°C to + 130°C.
- Deformation under load temperature (ASTM D643): > 200°C.
- Dielectric constant (ASTM D150): 4/5.
- Arc resistance (ASTM D495): > 180 s.
- Water absorption (ASTM D570): < 0.3 %.

Busbar supports
- High dielectric resistance.
- High mechanical strength.
- Amagnetism of assembly parts.
- High resistance to damp heat (originally "tropicalized").

Stair type supports
- Thermoplastic material.
- Self-extinguishing VO.
- Insulating voltage: 1000 V.

This document is not a contract. SOCOMEC reserves the right to modify features without prior notice in view of continued improvement. 2008 - 2009

The range

Current rating from 630 to 7000 A
Edgewise mounting

- SB C 10, SB C 20, SB C 30
  with fixed distance between phases.
- SBC ER, SBC ER Power
  with adjustable distance between phases.

see page
C.38

Current rating from 630 to 5800 A
Flat mounting

- SB 205 and SB 306
  unipolar mounting busbar supports.
- SB 7500 and SB P 30
  multipolar mounting busbar supports.

see page
C.48

Current rating up to 630 A

- Hexagonal insulators, SB 1, SB 2 and
  SB 3 unipolar busbar supports.
- SB E 44, SB P 10 and SB P 44
  multipolar busbar supports.

see page
C.52

This document is not a contract. SOCOMEC reserves the right to modify features
without prior notice in view of continued improvement. 2008 - 2009

Busbar supports

Current rating from 630 to 7000 A

Edgewise mounting

Rigid copper bars
Insulated flexible copper bars
Busbar supports
Mechanical systems software
Distribution blocks
Power terminals
BLOCAL aluminium systems
Mounting rails and profiles

Selection guide

Busbar supports with fixed interphase

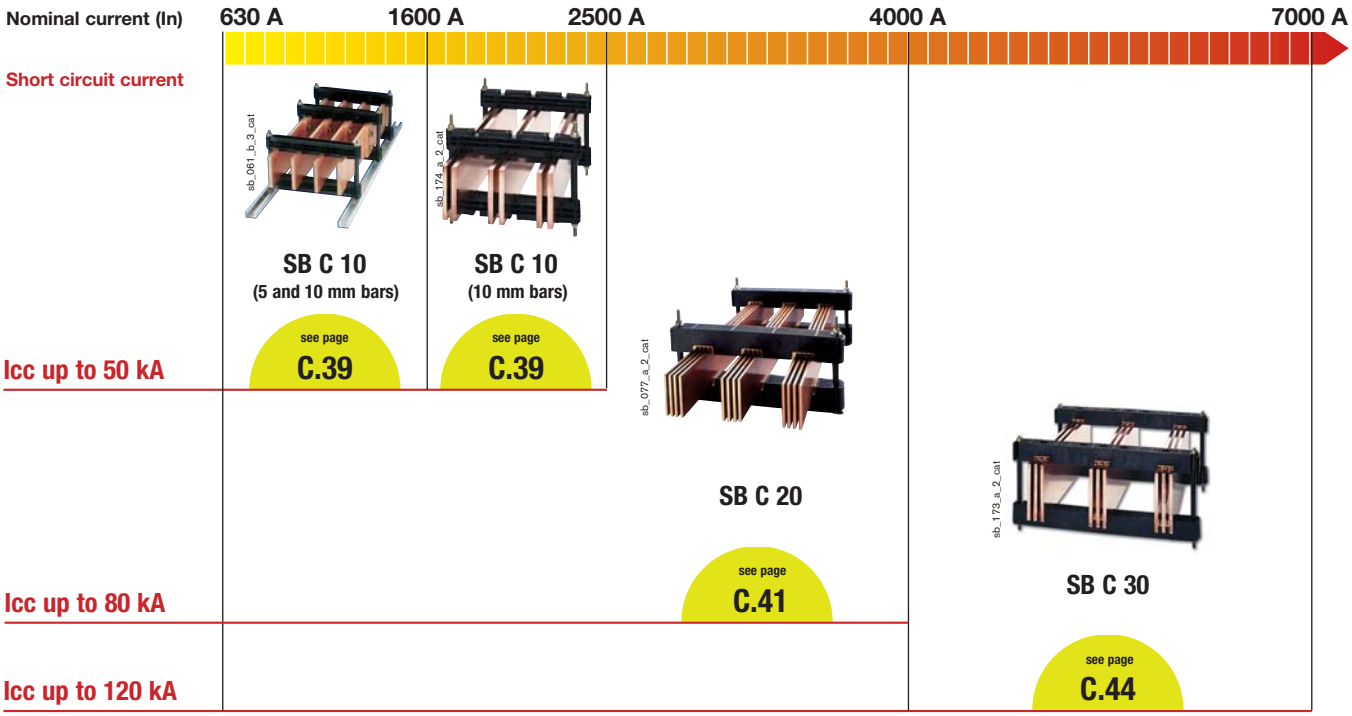

Busbar supports with variable interphase

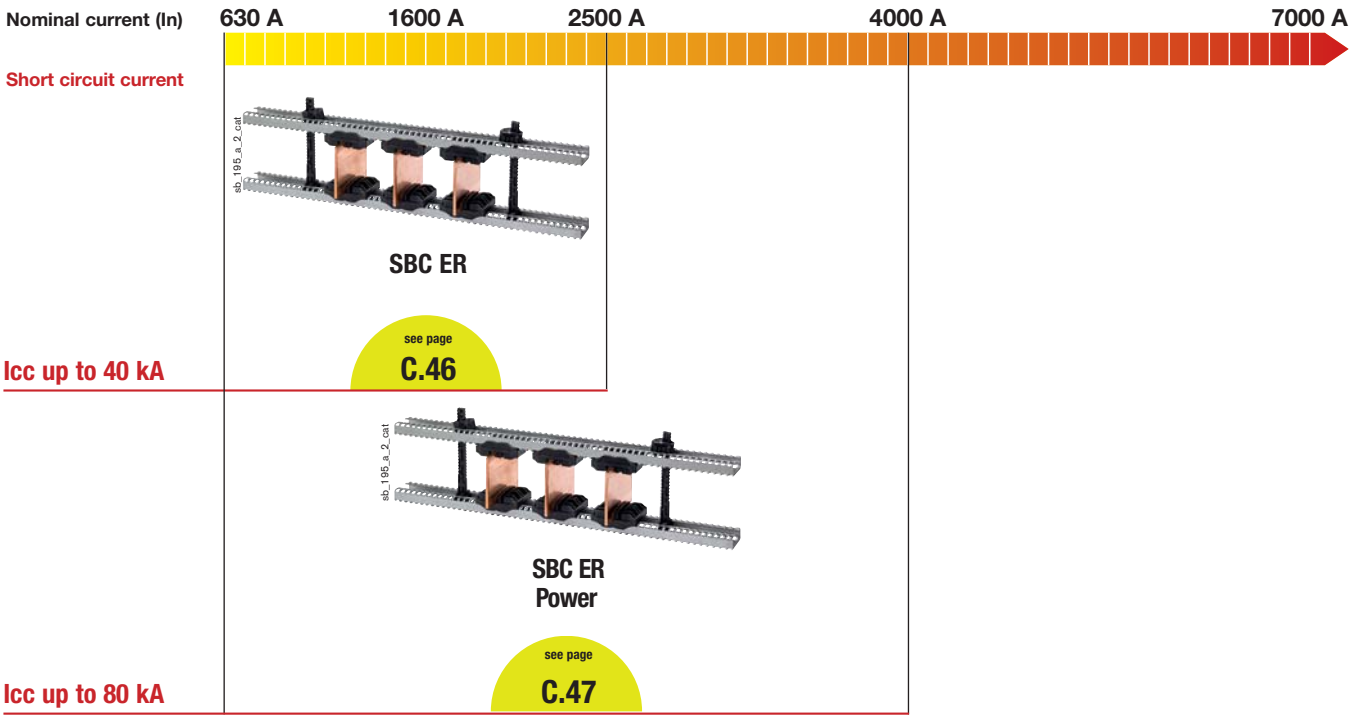

This document is not a contract. SOCOMEC reserves the right to modify features without prior notice in view of continued improvement. 2008 - 2009

Multipolar edgewise mounting busbar supports with fixed interphase

• **SB C 10**

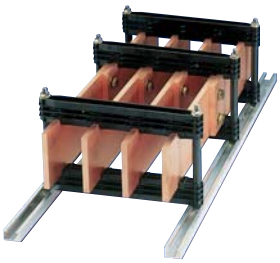

sb_061_b_2_cat

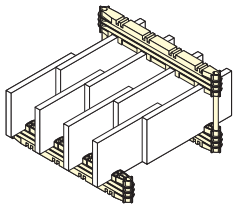

sb_054_b_1_x_cat

Mounting:

- 1 bar with a thickness of 6.35 mm per pole,

- 1 bar with a thickness of 10 mm per pole or 1 to 2 bars with a thickness of 5 mm per pole,

- 1 to 2 bars with a thickness of 10 mm per pole.

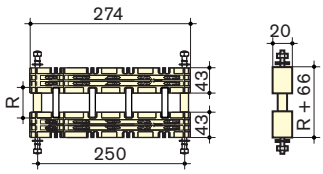

Type 1

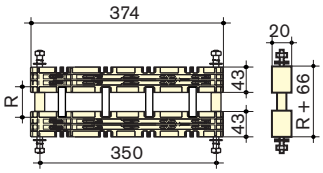

Type 2

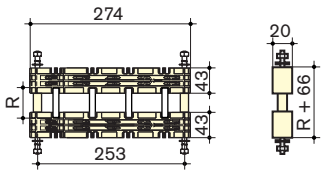

sb_184_a_1_x_cat

Type 3

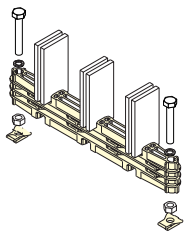

sb_094_a_1_x_cat

Bar holder for SB C 10

References

Supports without nuts and bolts (1)

No. of poles	Insulation voltage (VAC)	No. of bars max. x bars thickness (mm)	Interphase (mm)	Distance between centre (mm)	Pack qty	Type	References
3 P	1 000	2 x 5 / 1 x 10	75	250	1	1	5024 **6300**
4 P	1 000	2 x 5	60	250	1	1	5024 **6500**
4 P	1 000	1 x 10	65	250	1	1	5024 **6500**
3 P	800	1 x 10	65	250	1	1	5024 **6400**
3 P	800	2 x 10	90	250	1	1	5024 **6400**(2)
4 P	800	2 x 10	65	250	1	1	5024 **6700**
4 P	1 000	1 x 10 / 2 x 10	90	350	1	2	5024 **6600**
4 P	1 000	1 x 6.35	65	253	1	3	5024 **1500**
4 P	1 000	1 x 10	65	253	1	3	5024 **2500**
4 P	1 000	1 x 6.35	60	253	1	3	5024 **4500**

(1) Content: one support per reference.
(2) For interconnection details: please consult us.

Accessories

R bar height (mm) (1)	Pack qty	Mounting accessories(2)	Pack qty	Insulating spacers
25 / 25.4	1	5020 **2025**	50	5020 **4025**
30	1	5020 **2030**	50	5020 **4030**
32	1	5020 **2032**	50	5020 **4032**
38.1	1	5020 **2038**	50	5020 **4038**
40	1	5020 **2040**	50	5020 **4040**
50 / 50.8	1	5020 **2050**	50	5020 **4050**
60	1	5020 **2060**	50	5020 **4060**
63 / 63.5	1	5020 **2063**	50	5020 **4063**
70	1	5020 **2070**	50	5020 **4070**
76.2	1	5020 **2076**	50	5020 **4076**
80	1	5020 **2080**	50	5020 **4080**
100 / 101.6	1	5020 **2100**	50	5020 **4100**
120	1	5020 **2120**	50	5020 **4120**
125	1	5020 **2125**	50	5020 **4125**
127	1	5020 **2127**	50	5020 **4127**
152.4	1	5020 **2152**	50	5020 **4152**
160	1	5020 **2160**	50	5020 **4160**
200	1	5020 **2200**	50	5020 **4200**

(1) Other dimensions: please consult us.
(2) Mounting accessories: 2 M8 threaded studs + 2 black insulating spacers + 4 nuts + mounting instructions.

Diamond nuts (1)

H x L (mm)	Insert M	Pack qty	Reference
34 x 20	M8	100	5000 **0038**

(1) Required when mounting on C profile rail.

Bar holder (1)

No. of poles	No. of bars max. x bars thickness (mm)	Pack qty	References
3 P	2 x 5 / 1 x 10	1	5024 **9031**
4 P	2 x 5 / 1 x 10	1	5024 **9041**
3 P	1 x 10 / 2 x 10	1	5024 **9034**
4 P	1 x 10 / 2 x 10	1	5024 **9044**

(1) Bar holder: one support + 2 M8 screws + 2 nuts.

This document is not a contract. SOCOMEC reserves the right to modify features without prior notice in view of continued improvement. 2008 - 2009

Busbar supports

Current rating from 630 to 7000 A

Edgewise mounting

Rigid copper bars
Insulated flexible copper bars
Busbar supports
Mechanical systems software
Distribution blocks
Power terminals
BLOCAL aluminium systems
Mounting rails and profiles

Multipolar edgewise mounting busbar supports with fixed interphase

• **SB C 10 (continued)**

The respect of the maximum distance between supports guarantees their withstand to the short circuit values given. In case of short circuit reaching these values, loss of shape can occur. This loss of shape is permitted by the IEC 60439-1 standard as long as the insulation distances are respected.

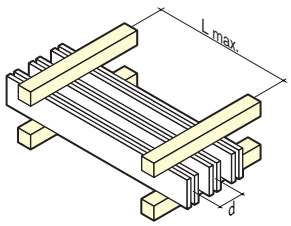

sb_021_b_1_x_cat

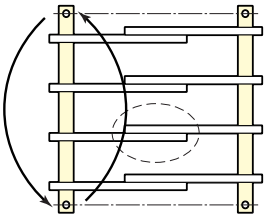

sb_045_b_1_x_cat

By reversing the supports bars will be off-set enabling easy installation without connection pieces

Characteristics of 3 and 4 poles with 5 or 10 mm bars

	Max. L (distance between centres of supports in mm) for						
peak Isc	30 kA	42 kA	52 kA	63 kA	110 kA		
rms Isc	15 kA	20 kA	25 kA	30 kA	50 kA		
Bar x no.						d (mm)	Iz (A)(1)
25 x 10 x 1	925	650	525	425		65	330
25 x 10 x 2	950	675	550	450	250	90	590
25 x 10 x 2	900	625	500	425	225	65	590
32 x 5 x 1	425	300	250	200	120	60	410
32 x 5 x 2	400	275	225	175	110	60	700
32 x 10 x 1	1 000	750	600	500	275	65	610
32 x 10 x 2	1 000	800	650	525	300	90	1050
32 x 10 x 2	1 000	725	575	475	275	65	1050
40 x 5 x 1	500	350	275	225	135	60	500
40 x 5 x 2	475	325	250	225	125	60	850
40 x 10 x 1	1 000	850	675	550	325	65	700
40 x 10 x 2	1 000	925	725	600	350	90	1250
40 x 10 x 2	1 000	850	675	550	325	65	1250
50 x 5 x 1	550	400	325	250	140	60	600
50 x 5 x 2	550	375	300	250	150	60	1050
50 x 10 x 1	1 000	950	775	625	350	65	850
50 x 10 x 2	1 000	1 000	850	700	400	90	1550
50 x 10 x 2	1 000	975	775	650	375	65	1550
63 x 5 x 1	650	450	375	300	140	60	700
63 x 5 x 2	650	450	375	300	175	60	1250
63 x 10 x 1	1 000	1 000	900	725	425	65	1050
63 x 10 x 1	1 000	1 000	1 000	850	475	90	1050
63 x 10 x 2	1 000	1 000	1 000	825	475	90	1850
63 x 10 x 2	1 000	1 000	1 000	775	425	65	1850
80 x 5 x 1	750	525	425	350	135	60	900
80 x 5 x 2	775	550	450	375	200	60	1550
80 x 10 x 1	1 000	1 000	1 000	850	450	65	1300
80 x 10 x 1	1 000	1 000	1 000	975	550	90	1300
80 x 10 x 2	1 000	1 000	1 000	975	550	90	2300
80 x 10 x 2	1 000	1 000	1 000	900	425	65	2300
100 x 5 x 1	875	625	500	400	135	60	1100
100 x 5 x 2	925	650	525	425	250	60	1900
100 x 10 x 1	1 000	1 000	1 000	975	450	65	1550
100 x 10 x 1	1 000	1 000	1 000	1 000	550	90	1550
100 x 10 x 2	1 000	1 000	1 000	1 000	550	90	2750
100 x 10 x 2	1 000	1 000	1 000	1 000	425	65	2750
125 x 5 x 1	1 000	725	575	400	135	60	1300
125 x 5 x 2	1 000	775	625	525	300	60	2350
125 x 10 x 1	1 000	1 000	1 000	1 000	450	65	1900
125 x 10 x 2	1 000	1 000	1 000	1 000	550	90	3350
125 x 10 x 2	1 000	1 000	1 000	1 000	450	65	3350
160 x 10 x 1	1 000	1 000	1 000	1 000	450	65	2350
160 x 10 x 1	1 000	1 000	1 000	1 000	550	90	2350
160 x 10 x 2	1 000	1 000	1 000	1 000	550	90	4150
160 x 10 x 2	1 000	1 000	1 000	1 000	450	65	4150

(1) Admissible nominal current for a temperature in the cabinet of 45°C and 80°C for the bars.
Other assembly configurations: please consult us.

This document is not a contract. SOCOMEC reserves the right to modify features without prior notice in view of continued improvement. 2008 - 2009

Multipolar edgewise mounting busbar supports with fixed interphase

• **SB C 20**

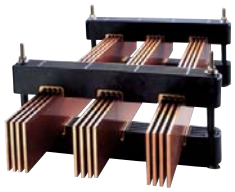

sb_077_a_2_cat

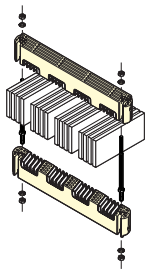

sb_063_a_1_x_cat

Mounting:
- 1 to 4 bars with a thickness of 5 mm per pole,
- 1 to 2 bars with a thickness of 10 mm per pole.

Fixed interphase:
- 3 pole: 110 mm,
- 4 pole: 90 mm.

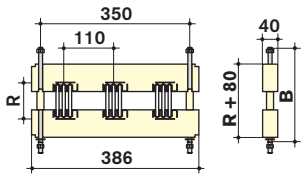

sb_066_c_1_x_cat

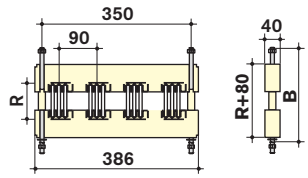

sb_067_c_1_x_cat

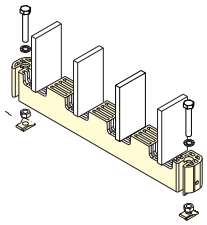

sb_093_a_1_x_cat

Bar holder for SB C 20

References

Supports without nuts and bolts (1)

No. of poles	Insulation voltage (VAC)	No. of bars	Bars thickness (mm)	Interphase (mm)	Pack qty	References
3 P	1 000	1 … 4	5	110	1	5024 **8300**
4 P	1 000	1 … 4	5	90	1	5024 **8400**
3 P	1 000	1 … 2	10	110	1	5024 **7300**
4 P	1 000	1 … 2	10	90	1	5024 **7400**
3 P	1 000	1 … 3	6.35	110	1	5024 **3300**
4 P	1 000	1 … 3	6.35	90	1	5024 **3400**

(1) Content: 2 supports per reference complete with inserts.

Accessories

R bar height (mm) (1)	Pack qty	Mounting accessories(2)	Pack qty	Insulating spacers
25 / 25.4	1	5020 **2025**	50	5020 **4025**
30	1	5020 **2030**	50	5020 **4030**
32	1	5020 **2032**	50	5020 **4032**
38.1	1	5020 **2038**	50	5020 **4038**
40	1	5020 **2040**	50	5020 **4040**
50 / 50.8	1	5020 **2050**	50	5020 **4050**
60	1	5020 **2060**	50	5020 **4060**
63 / 63.5	1	5020 **2063**	50	5020 **4063**
70	1	5020 **2070**	50	5020 **4070**
76.2	1	5020 **2076**	50	5020 **4076**
80	1	5020 **2080**	50	5020 **4080**
100 / 101.6	1	5020 **2100**	50	5020 **4100**
120	1	5020 **2120**	50	5020 **4120**
125	1	5020 **2125**	50	5020 **4125**
127	1	5020 **2127**	50	5020 **4127**
152.4	1	5020 **2152**	50	5020 **4152**
160	1	5020 **2160**	50	5020 **4160**
200	1	5020 **2200**	50	5020 **4200**

(1) Other dimensions: please consult us.
(2) Mounting accessories: 2 M8 threaded studs + 2 black insulating spacers + 4 nuts + mounting instructions.

Diamond nuts (1)

H x L (mm)	Insert M	Pack qty	Reference
34 x 20	M8	100	5000 **0038**

(1) Required when mounting on C profile rail.

Bar holder (1)

No. of poles	Pack qty	References
3 P	1	5024 **9032**
4 P	1	5024 **9042**

(1) Bar holder: one support + 2 M8 screws + 2 nuts.

This document is not a contract. SOCOMEC reserves the right to modify features without prior notice in view of continued improvement. 2008 - 2009

Busbar supports

Current rating from 630 to 7000 A

Edgewise mounting

Rigid copper bars
Insulated flexible copper bars
Busbar supports
Mechanical systems software
Distribution blocks
Power terminals
BLOCAL aluminium systems
Mounting rails and profiles

Multipolar edgewise mounting busbar supports with fixed interphase

• **SB C 20 (continued)**

The respect of the maximum distance between supports guarantees their withstand to the short circuit values given. In case of short circuit reaching these values, loss of shape can occur. This loss of shape is permitted by the IEC 60439-1 standard as long as the insulation distances are respected.

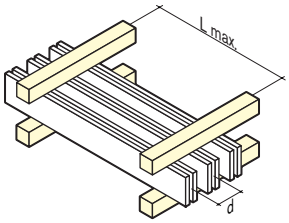

sb_021_b_1_x_cat

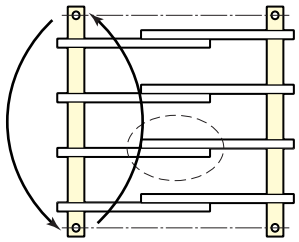

sb_045_b_1_x_cat

By reversing the supports bars will be off-set enabling easy installation without connection pieces

Characteristics of 3 and 4 poles with 5 mm bars

	Max. L (distance between centres of supports in mm) for								
peak Isc	63 kA	84 kA	110 kA	143 kA	165 kA	187 kA	220 kA	264 kA	
rms Isc	30 kA	40 kA	50 kA	65 kA	75 kA	85 kA	100 kA	120 kA	
Bar x no.									d (mm)
50 x 5 x 1	625	475	350	275	225	200	175	150	90
50 x 5 x 2	525	400	300	225	200	175	155	130	90
50 x 5 x 3	600	450	350	250	225	200	175	145	90
50 x 5 x 4	675	525	375	300	250	225	175	160	90
60 x 5 x 1	675	525	400	300	250	225	200	165	90
60 x 5 x 2	600	450	350	250	225	200	175	145	90
60 x 5 x 3	675	525	375	300	250	225	175	165	90
60 x 5 x 4	750	575	425	325	275	250	200	175	90
63 x 5 x 1	700	550	400	300	250	225	200	170	90
63 x 5 x 2	625	475	350	275	225	200	175	150	90
63 x 5 x 3	700	525	400	300	250	225	200	170	90
63 x 5 x 4	775	600	425	325	275	250	200	175	90
80 x 5 x 1	800	625	450	350	300	250	225	175	90
80 x 5 x 2	725	550	425	325	275	250	200	175	90
80 x 5 x 3	800	625	450	350	300	275	225	175	90
80 x 5 x 4	875	675	500	375	325	300	250	200	90
100 x 5 x 1	900	700	525	400	350	300	250	200	90
100 x 5 x 2	850	650	475	375	325	275	225	200	90
100 x 5 x 3	925	700	525	400	350	300	250	200	90
100 x 5 x 4	975	750	550	425	375	325	275	225	90
125 x 5 x 1	1 000	800	600	450	400	350	300	250	90
125 x 5 x 2	975	750	550	425	375	325	275	225	90
125 x 5 x 3	1 000	800	600	450	400	350	300	250	90
125 x 5 x 4	1 000	825	600	450	400	350	300	250	90

This document is not a contract. SOCOMEC reserves the right to modify features without prior notice in view of continued improvement. 2008 - 2009

Multipolar edgewise mounting busbar supports with fixed interphase

• SB C 20 (continued)

The respect of the maximum distance between supports guarantees their withstand to the short circuit values given. In case of short circuit reaching these values, loss of shape can occur. This loss of shape is permitted by the IEC 60439-1 standard as long as the insulation distances are respected.

sb_179_a_1_cat

Easy fitting of a protection cover

sb_113_a_1_cat

The fixing holes enable an easy and rapid fixation of the support

Characteristics of 3 and 4 poles with 10 mm bars

	Max. L (distance between centres of supports in mm) for								
peak Isc	63 kA	84 kA	110 kA	143 kA	165 kA	187 kA	220 kA	264 kA	
rms Isc	30 kA	40 kA	50 kA	65 kA	75 kA	85 kA	100 kA	120 kA	
Bar x no.									d (mm)
50 x 10 x 1	1 000	925	700	525	450	400	350	275	90
50 x 10 x 2	1 000	850	625	475	400	350	300	250	90
60 x 10 x 1	1 000	1 000	750	575	500	450	375	300	90
60 x 10 x 2	1 000	925	700	525	450	400	350	275	90
70 x 10 x 1	1 000	1 000	775	600	525	450	375	325	90
70 x 10 x 2	1 000	950	700	550	475	400	350	275	90
80 x 10 x 1	1 000	1 000	875	675	575	525	425	350	90
80 x 10 x 2	1 000	1 000	800	600	525	475	400	325	90
100 x 10 x 1	1 000	1 000	975	750	650	575	475	400	90
100 x 10 x 2	1 000	1 000	875	675	575	525	425	350	90
125 x 10 x 1	1 000	1 000	1 000	850	725	650	550	450	90
125 x 10 x 2	1 000	1 000	950	725	625	550	475	400	90
160 x 10 x 1	1 000	1 000	1 000	950	825	725	625	500	90
160 x 10 x 2	1 000	1 000	975	750	650	575	475	400	90
200 x 10 x 1	1 000	1 000	1 000	1 000	900	800	675	525	90
200 x 10 x 2	1 000	1 000	900	675	600	525	450	375	90

This document is not a contract. SOCOMEC reserves the right to modify features without prior notice in view of continued improvement. 2008 - 2009

Busbar supports

Current rating from 630 to 7000 A

Edgewise mounting

Rigid copper bars
Insulated flexible copper bars
Busbar supports
Mechanical systems software
Distribution blocks
Power terminals
BLOCAL aluminium systems
Mounting rails and profiles

Multipolar edgewise mounting busbar supports with fixed interphase

• **SB C 30**

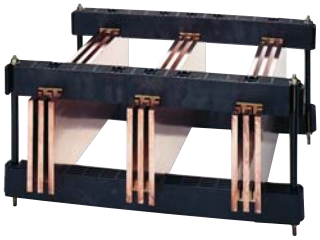

sb_173_a_3_cat

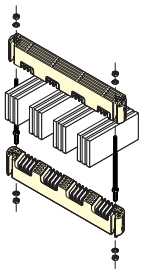

sb_162_a_1_x_cat

Mounting:
1 to 3 bars with a thickness of 10 mm per pole.

Fixed interphase:
- 3 pole: 185 mm,
- 4 pole: 130 mm.

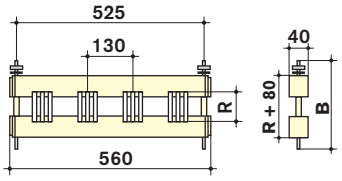

sb_157_d_1_x_cat

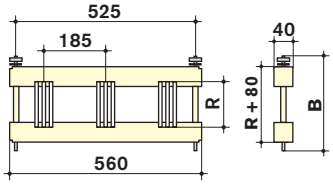

sb_146_d_1_x_cat

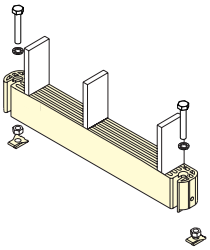

sb_122_b_1_x_cat

Bar holder for SB C 30

References

Supports without nuts and bolts (1)

No. of poles	Insulation voltage (VAC)	No. of bars	Bars thickness (mm)	Interphase (mm)	Pack qty	References
3 P	1 000	1 … 3	10	185	1	5024 **5300**
4 P	1 000	1 … 3	10	130	1	5024 **5500**

(1) Content: 2 supports per reference complete with inserts.

Accessories

R bar height (mm) (1)	Pack qty	Mounting accessories(2)	Pack qty	Insulating spacers
25 / 25.4	1	5020 **2025**	50	5020 **4025**
30	1	5020 **2030**	50	5020 **4030**
32	1	5020 **2032**	50	5020 **4032**
38.1	1	5020 **2038**	50	5020 **4038**
40	1	5020 **2040**	50	5020 **4040**
50 / 50.8	1	5020 **2050**	50	5020 **4050**
60	1	5020 **2060**	50	5020 **4060**
63 / 63.5	1	5020 **2063**	50	5020 **4063**
70	1	5020 **2070**	50	5020 **4070**
76.2	1	5020 **2076**	50	5020 **4076**
80	1	5020 **2080**	50	5020 **4080**
100 / 101.6	1	5020 **2100**	50	5020 **4100**
120	1	5020 **2120**	50	5020 **4120**
125	1	5020 **2125**	50	5020 **4125**
127	1	5020 **2127**	50	5020 **4127**
152.4	1	5020 **2152**	50	5020 **4152**
160	1	5020 **2160**	50	5020 **4160**
200	1	5020 **2200**	50	5020 **4200**

(1) Other dimensions: please consult us.
(2) Mounting accessories: 2 M8 threaded studs + 2 black insulating spacers + 4 nuts + mounting instructions.

Diamond nuts (1)

H x L (mm)	Insert M	Pack qty	Reference
34 x 20	M8	100	5000 **0038**

(1) Required when mounting on C profile rail.

Bar holder (1)

Polzahl	Pack qty	Reference
3 / 4 P	1	5024 **9033**

(1) Bar holder: one support + 2 M8 screws + 2 nuts.

This document is not a contract. SOCOMEC reserves the right to modify features without prior notice in view of continued improvement. 2008 - 2009

Multipolar edgewise mounting busbar supports with fixed interphase

• SB C 30 (continued)

The respect of the maximum distance between supports guarantees their withstand to the short circuit values given. In case of short circuit reaching these values, loss of shape can occur. This loss of shape is permitted by the IEC 60439-1 standard as long as the insulation distances are respected.

sb_021_b_1_x_cat

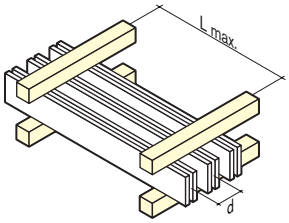

sb_045_b_1_x_cat

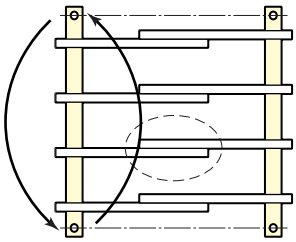

sb_179_a_1_cat

Easy fitting of a protection cover

Characteristics of 3 and 4 poles with 10 mm bars

	Max. L (distance between centres of supports in mm) for								
peak Icc	63 kA	84 kA	110 kA	143 kA	165 kA	187 kA	220 kA	264 kA	
rms Icc	30 kA	40 kA	50 kA	65 kA	75 kA	85 kA	100 kA	120 kA	
Bar x no.									d (mm)
50 x 10 x 1	1000	1000	825	625	550	475	400	350	130
50 x 10 x 2	1000	900	675	525	450	400	325	275	130
50 x 10 x 3	725	550	400	300	275	225	200	175	130
60 x 10 x 1	1000	1000	900	700	600	525	450	375	130
60 x 10 x 2	1000	1000	750	575	500	425	375	300	130
60 x 10 x 3	825	625	450	350	300	275	225	175	130
70 x 10 x 1	1000	1000	925	700	600	550	450	375	130
70 x 10 x 2	1000	1000	775	575	500	450	375	300	130
70 x 10 x 3	850	650	475	375	325	275	225	200	130
80 x 10 x 1	1000	1000	1000	800	675	600	500	425	130
80 x 10 x 2	1000	1000	850	650	575	500	425	350	130
80 x 10 x 3	1000	750	575	425	375	325	275	225	130
100 x 10 x 1	1000	1000	1000	875	750	675	575	475	130
100 x 10 x 2	1000	1000	950	725	625	550	475	400	130
100 x 10 x 3	1000	900	650	500	425	375	325	275	130
125 x 10 x 1	1000	1000	1000	975	850	750	625	525	130
125 x 10 x 2	1000	1000	1000	800	675	600	500	425	130
125 x 10 x 3	1000	1000	775	600	525	450	375	325	130
160 x 10 x 1	1000	1000	1000	1000	925	825	700	575	130
160 x 10 x 2	1000	1000	1000	800	700	625	525	425	130
160 x 10 x 3	1000	1000	950	725	625	550	475	375	130
200 x 10 x 1	1000	1000	1000	1000	1000	900	750	625	130
200 x 10 x 2	1000	1000	950	725	625	550	475	400	130
200 x 10 x 3	1000	1000	750	575	500	425	375	300	130

This document is not a contract. SOCOMEC reserves the right to modify features without prior notice in view of continued improvement. 2008 - 2009

Busbar supports

Current rating from 630 to 7000 A

Edgewise mounting

Rigid copper bars
Insulated flexible copper bars
Busbar supports
Mechanical systems software
Distribution blocks
Power terminals
BLOCAL aluminium systems
Mounting rails and profiles

Multipolar edgewise mounting busbar supports with variable interphase

• **SBC ER**

sb_197_b_2_cat

Ordering guide

- *For 3 pole, order:*
  - *6 x slot,*
  - *2 x stud,*
  - *2 x profiles.*
- *For 4 pole, order:*
  - *8 x slot,*
  - *2 x stud,*
  - *2 x profiles.*

Mounting:
- *1 to 3 bars with a thickness of 5 mm per pole,*
- *1 or 2 bars with a thickness of 10 mm per pole,*
- *interphase: 75 mm mini and 200 mm max,*
- *use 2 studs symetrically positioned.*

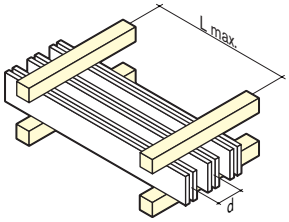

sb_021_b_1_x_cat

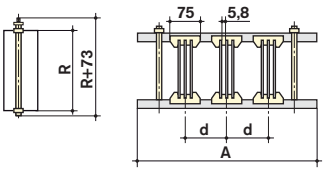

sb_198_a_1_x_cat

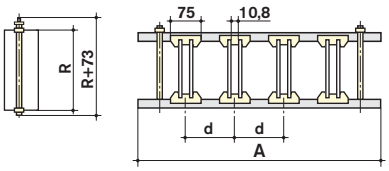

sb_199_a_1_x_cat

References

Description of accessories	Depth (mm)	Insulation voltage (VAC)	Pack qty	References
Slot for 5 mm bars	-	1000	8	5025 **5105**
Slot for 10 mm bars	-	1000	8	5025 **5110**
Stud (25 to 200 mm bars)	-	-	4	5025 **5100**
380 mm profile	400	-	4	5025 **5124**
480 mm profile	500	-	4	5025 **5125**
580 mm profile	600	-	4	5025 **5126**
780 mm profile	800	-	4	5025 **5128**
2 m profile	-	-	4	5025 **5120**
Kit for SE Prisma cabinet (1)	600	-	1	5025 **5130**

(1) Kit includes 2 profiles and 4 square fixings.

Characteristics

	Max. L (distance between centres of supports in mm) for						
peak Icc	24 kA	48 kA	63 kA	82 kA	114 kA		
rms Icc	12 kA	23 kA	30 kA	39 kA	52 kA		
Barre x no.						d min. (mm)	Iz (A)(1)
50 x 5 x 1	975	475	350	275	-	75	600
50 x 5 x 2	900	450	325	250	175	75	1050
50 x 5 x 3	1000	525	400	300	200	75	1450
63 x 5 x 1	1000	550	425	325	200	75	700
63 x 5 x 2	1000	525	400	300	200	75	1250
63 x 5 x 3	1000	625	475	350	200	75	1800
80 x 5 x 1	1000	625	475	375	225	75	900
80 x 5 x 2	1000	625	475	375	225	75	1250
80 x 5 x 3	1000	725	550	425	225	75	2200
100 x 5 x 1	1000	725	550	425	225	75	1100
100 x 5 x 2	1000	750	575	425	225	75	1900
100 x 5 x 3	1000	875	650	450	225	75	2650
125 x 5 x 1	1000	850	650	500	250	75	1300
125 x 5 x 2	1000	900	675	500	250	75	2350
125 x 5 x 3	1000	1000	800	500	250	75	3250
50 x 10 x 1	1000	975	700	400	200	75	850
50 x 10 x 2	1000	950	675	400	200	75	1550
63 x 10 x 1	1000	1000	725	425	200	75	1050
63 x 10 x 2	1000	1000	700	400	200	75	1850
80 x 10 x 1	1000	1000	750	450	225	75	1300
80 x 10 x 2	1000	1000	750	425	225	75	2300
100 x 10 x 1	1000	1000	800	475	225	75	1550
100 x 10 x 2	1000	1000	800	450	225	75	2750
125 x 10 x 1	1000	1000	850	500	250	75	1900
125 x 10 x 2	1000	1000	850	500	250	75	3350

(1) Admissible nominal current for a temperature in the cabinet of 45°C and 80°C for the bars.
Other assembly configurations: please consult us.

Dimensions

Enclosure (mm)	A (mm)
400	380
500	480
600	580
800	780

This document is not a contract. SOCOMEC reserves the right to modify features without prior notice in view of continued improvement. 2008 - 2009

Multipolar edgewise mounting busbar supports with variable interphase for high ratings

- **SBC ER Power**

sb_195_a_2_cat

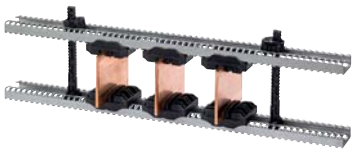

Ordering guide

- *For 3 pole, order:*
  - *6 x slot,*
  - *2 x stud,*
  - *2 x profiles.*
- *For 4 pole, order:*
  - *8 x slot,*
  - *2 x stud,*
  - *2 x profiles.*

Mounting:
- *1 to 3 bars with a thickness of 5 mm per pole,*
- *1 or 2 bars with a thickness of 10 mm per pole,*
- *interphase: 75 mm mini and 200 mm max,*
- *use 2 studs symetrically positioned.*

sb_021_b_1_x_cat

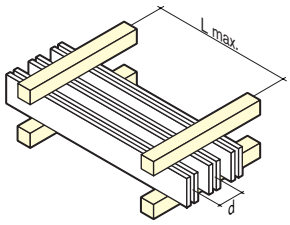

sb_198_a_1_x_cat

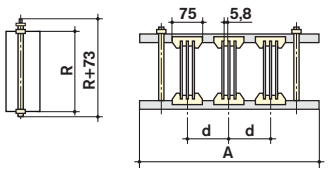

sb_199_a_1_x_cat

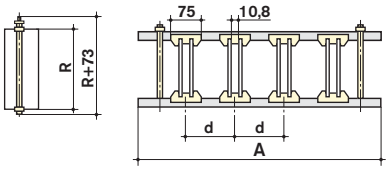

References

Description of accessories	Depth (mm)	Insulation voltage (VAC)	Pack qty	References
Slot for 5 mm bars	-	1000	8	5025 **5205**
Slot for 10 mm bars	-	1000	8	5025 **5210**
Stud (25 to 200 mm bars)	-	-	4	5025 **5100**
380 mm profile	400	-	4	5025 **5124**
480 mm profile	500	-	4	5025 **5125**
580 mm profile	600	-	4	5025 **5126**
780 mm profile	800	-	4	5025 **5128**
2 m profile	-	-	4	5025 **5120**
Kit for SE Prisma cabinet (1)	600	-	1	5025 **5130**

(1) Kit includes 2 profiles and 4 square fixings.

Characteristics

	Max. L (distance between centres of supports in mm) for						
peak Icc	82 kA	114 kA	152 kA	165 kA	187 kA		
rms Icc	39 kA	52 kA	69 kA	75 kA	85 kA		
Bar x no.						d min. (mm)	Iz (A)(1)
50 x 5 x 1	275	-	-	-	-	75	600
50 x 5 x 2	250	175	140	130	115	75	1050
50 x 5 x 3	300	200	165	150	135	75	1450
63 x 5 x 1	325	225	-	-	-	75	700
63 x 5 x 2	300	225	165	155	135	75	1250
63 x 5 x 3	350	250	175	175	160	75	1800
80 x 5 x 1	375	250	200	-	-	75	900
80 x 5 x 2	375	250	200	175	160	75	1550
80 x 5 x 3	425	300	225	200	175	75	2200
100 x 5 x 1	425	300	225	200	175	75	1100
100 x 5 x 2	425	300	225	200	175	75	1900
100 x 5 x 3	500	350	275	250	200	75	2650
125 x 5 x 1	500	350	250	250	200	75	1300
125 x 5 x 2	525	375	275	250	225	75	2350
125 x 5 x 3	600	425	325	275	225	75	3250
80 x 10 x 1	750	525	300	250	200	75	1300
80 x 10 x 2	775	525	300	250	175	75	2300
100 x 10 x 1	850	575	300	275	200	75	1550
100 x 10 x 2	900	550	300	250	200	75	2750
125 x 10 x 1	1000	600	325	275	225	75	1900
125 x 10 x 2	1000	600	325	275	225	75	3350
160 x 10 x 1	1000	675	375	325	250	75	2350
160 x 10 x 2	1000	675	375	325	250	75	4150

(1) Admissible nominal current for a temperature in the cabinet of 45°C and 80°C for the bars.
Other assembly configurations: please consult us.

Dimensions

Enclosure (mm)	A (mm)
400	380
500	480
600	580
800	780

This document is not a contract. SOCOMEC reserves the right to modify features without prior notice in view of continued improvement. 2008 - 2009

Busbar supports

Current rating from 630 to 5800 A

Flat mounting

Rigid copper bars
Insulated flexible copper bars
Busbar supports
Mechanical systems software
Distribution blocks
Power terminals
BLOCAL aluminium systems
Mounting rails and profiles

Selection guide

Unipolar busbar supports

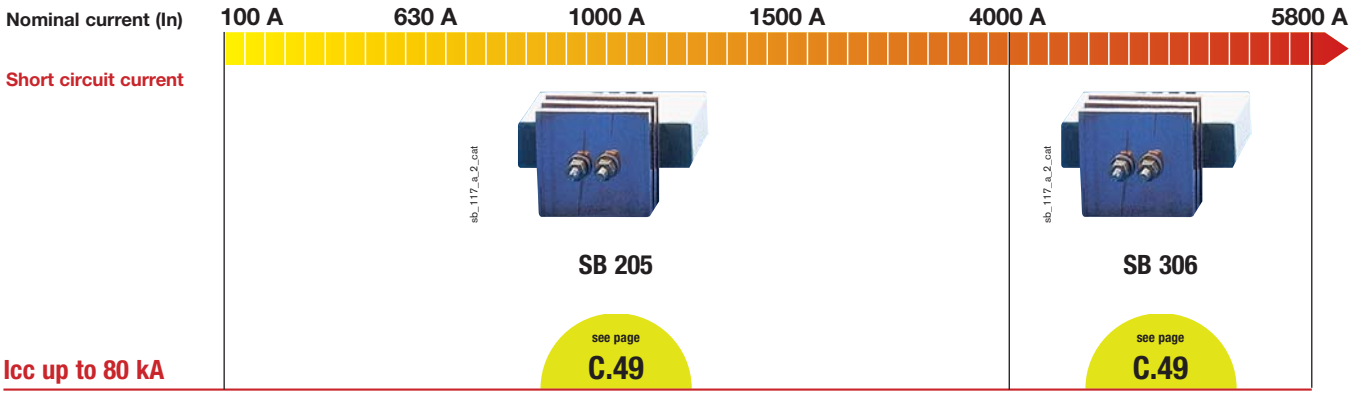

Multipolar busbar supports

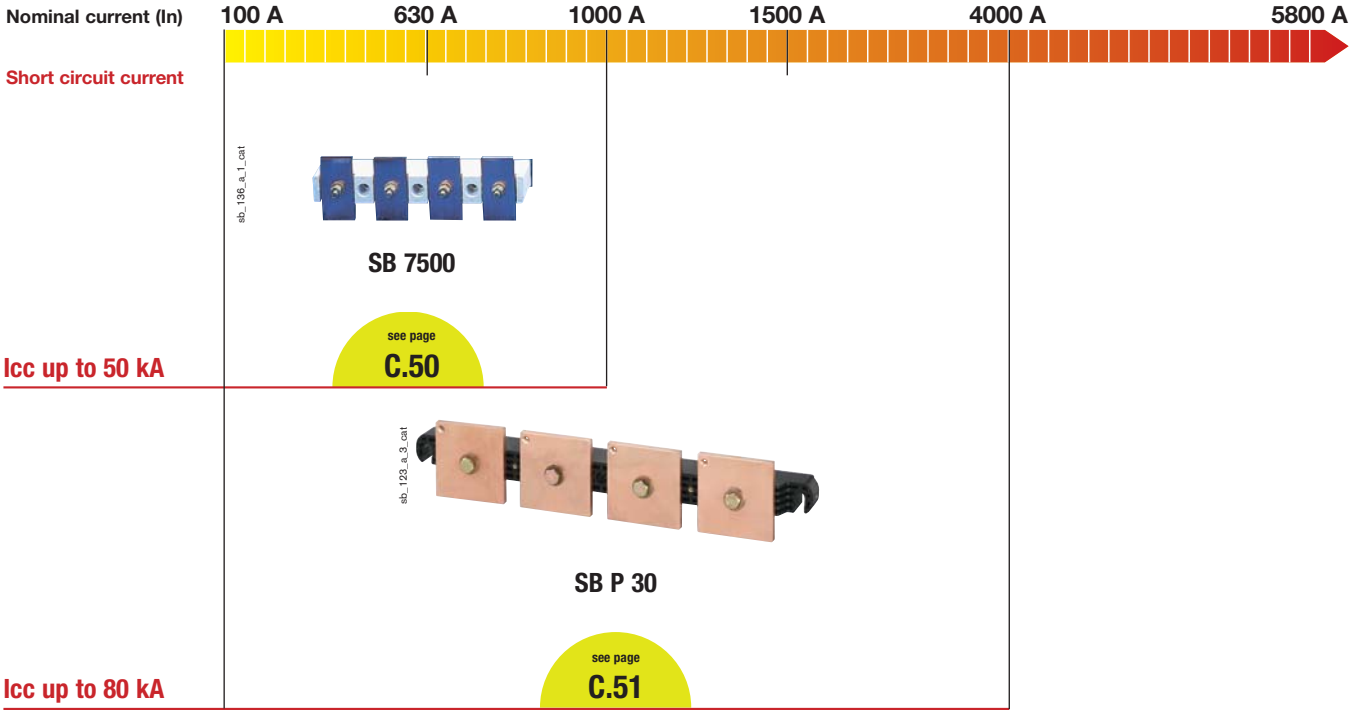

This document is not a contract. SOCOMEC reserves the right to modify features without prior notice in view of continued improvement. 2008 - 2009

Unipolar flat mounting busbar supports

- **SB 205 - SB 306**

sb_117_a_2_cat

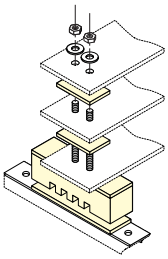

sb_152_a_1_x_cat

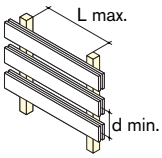

SB 205:
1 to 3 bars of max. width 100 mm.

SB 306:
1 to 3 bars of max. width 160 mm.

References

Support	Insulation voltage (VAC)	No. of bars	Bar width (mm)	Pack qty	References
SB 205	1 000	1 … 3	100	6	5022 **5110**
SB 306	1 000	1 … 3	160	6	5023 **6110**

Characteristics

		Max. L (distance between centres of supports in mm) for							
	peak Icc	48 kA	63 kA	82 kA	114 kA	152 kA	165 kA		
	rms Icc	23 kA	30 kA	39 kA	52 kA	69 kA	75 kA		
Support	Bar x no.							d min. (mm)	Iz (A)(1)
SB 205	100 x 10 x 1	1000	1000	1000	1000	1000	1000	125	1550
SB 205	100 x 10 x 2	1000	1000	1000	1000	1000	1000	125	2750
SB 205	100 x 10 x 3	1000	1000	1000	1000	1000	1000	125	3850
SB 306	160 x 10 x 1	1000	1000	1000	1000	1000	1000	175	2350
SB 306	160 x 10 x 2	1000	1000	1000	1000	1000	1000	175	4150
SB 306	160 x 10 x 3	1000	1000	1000	1000	1000	1000	175	5800

(1) Admissible nominal current for a temperature in the cabinet of 45°C and 80°C for the bars.
Other assembly configurations: please consult us.

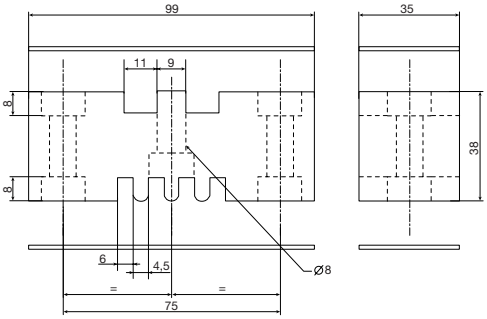

sb_175_a_1_x_cat

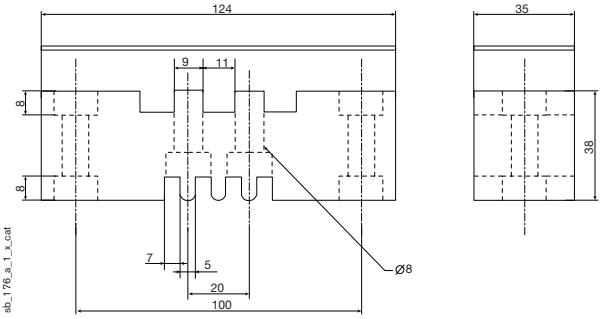

sb_176_a_1_x_cat

This document is not a contract. SOCOMEC reserves the right to modify features without prior notice in view of continued improvement. 2008 - 2009

Busbar supports

Current rating from 630 to 5800 A

Flat mounting

Rigid copper bars
Insulated flexible copper bars
Busbar supports
Mechanical systems software
Distribution blocks
Power terminals
BLOCAL aluminium systems
Mounting rails and profiles

Multipolar flat mounting busbar supports with fixed interphase

• **SB 7500**

sb_136_a_3_cat

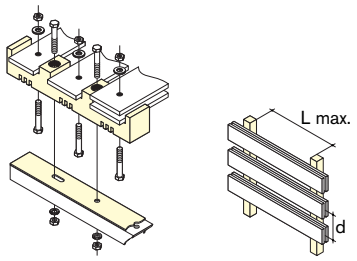

sb_153_b_1_x_cat

SB 7500: 1 to 2 bars of max. width 50 mm per pole, fixed interphase of 75 mm.

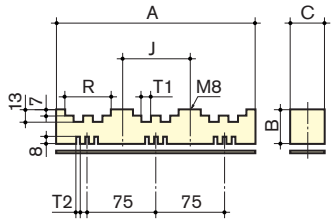

sb_149_a_1_x_cat

References

No. of poles	Insulation voltage (VAC)	Bar width (mm)	Pack qty	References
3 P	1000	40-50	1	5027 **5310**
4 P	1000	40-50	1	5027 **5410**

Characteristics

	Max. L (distance between centres of supports in mm) for							
peak Icc	24 kA	48 kA	63 kA	82 kA	114 kA	152 kA		
rms Icc	12 kA	23 kA	30 kA	39 kA	52 kA	69 kA		
Barre x no.							d (mm)	Iz (A)(1)
50 x 5 x 1	1000	1000	950	725	525	450	75	600
50 x 5 x 2	1000	1000	1000	1000	975	850	75	1 050

(1) Admissible nominal current for a temperature in the cabinet of 45°C and 80°C for the bars. Other assembly configurations: please consult us.

Dimensions (mm)

No. of poles	A	B	C	J	R	T_1	T_2
3 P	220	38	35	75	52.5	11	6
4 P	295	38	35	75	52.5	11	6

This document is not a contract. SOCOMEC reserves the right to modify features without prior notice in view of continued improvement. 2008 - 2009

Multipolar flat mounting busbar supports with fixed interphase

- **SB P 30**

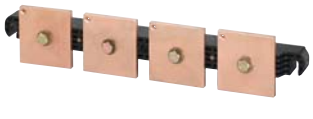

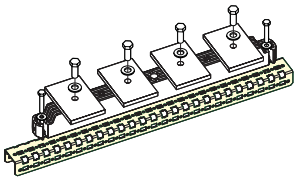

SB P 30:
- 3 pole: 1 to 3 bars of max. width 100 mm per pole, fixed interphase of 185 mm,

- 4 pole: 1 to 3 bars of max. width 80 mm per pole, fixed interphase of 123 mm.

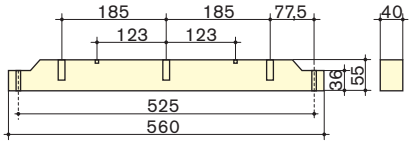

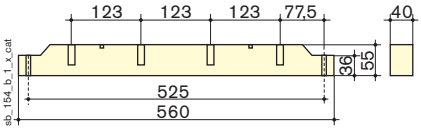

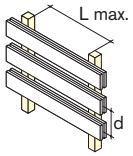

References

No. of poles	Insulation voltage (VAC)	Bar width (mm)	Pack qty	References
3 P	1000	50-100	1	5023 **0310**
4 P	1000	50-80	1	5023 **0410**

Characteristics - d = 123 mm

	Max. L (distance between centres of supports in mm) for									
peak Icc	63 kA	84 kA	110 kA	143 kA	165 kA	176 kA	187 kA	220 kA		
rms Icc	30 kA	40 kA	50 kA	65 kA	75 kA	80 kA	85 kA	100 kA		
Bar x no.									d (mm)	Iz (A)(1)
50 x 5 x 1	1000	950	525	300	225	200	175	130	123	600
50 x 5 x 2	1000	925	525	300	225	200	175	130	123	1050
50 x 5 x 3	1000	950	525	300	225	200	175	135	123	1450
63 x 5 x 1	1000	925	525	300	225	200	175	130	123	700
63 x 5 x 2	1000	925	525	300	225	200	175	130	123	1250
63 x 5 x 3	1000	950	525	300	225	200	175	130	123	1800
80 x 5 x 1	1000	900	500	300	225	175	175	125	123	900
80 x 5 x 2	1000	900	500	300	225	175	175	125	123	1550
80 x 5 x 3	1000	900	500	300	225	200	175	125	123	2200
50 x 10 x 1	1000	950	525	300	225	200	175	130	123	850
50 x 10 x 2	1000	975	525	300	225	200	175	135	123	1550
50 x 10 x 3	1000	975	550	325	225	200	175	135	123	2150
63 x 10 x 1	1000	925	525	300	225	200	175	130	123	1050
63 x 10 x 2	1000	950	525	300	225	200	175	130	123	1850
63 x 10 x 3	1000	975	525	300	225	200	175	135	123	2600
80 x 10 x 1	1000	900	500	300	225	175	175	125	123	1300
80 x 10 x 2	1000	925	500	300	225	200	175	125	123	2300
80 x 10 x 3	1000	950	525	300	225	200	175	130	123	3200

(1) Admissible nominal current for a temperature in the cabinet of 45°C and 80°C for the bars. Other assembly configurations: please consult us.

Characteristics - d = 185 mm

	Max. L (distance between centres of supports in mm) for									
peak Icc	63 kA	84 kA	110 kA	143 kA	165 kA	176 kA	187 kA	220 kA		
rms Icc	30 kA	40 kA	50 kA	65 kA	75 kA	80 kA	85 kA	100 kA		
Bar x no.									d (mm)	Iz (A)(1)
50 x 5 x 1...3	1000	1000	800	475	350	300	275	200	185	-
63 x 5 x 1...3	1000	1000	800	475	350	300	275	200	185	-
80 x 5 x 1...3	1000	1000	800	475	350	300	275	200	185	-
100 x 5 x 1	1000	1000	775	450	325	300	250	175	185	1100
100 x 5 x 2	1000	1000	775	450	325	300	250	175	185	1900
100 x 5 x 3	1000	1000	775	450	350	300	250	175	185	2650
50 x 10 x 1...2	1000	1000	800	475	350	300	275	200	185	-
50 x 10 x 3	1000	1000	825	475	350	300	275	200	185	-
63 x 10 x 1...3	1000	1000	800	475	350	300	275	200	185	-
80 x 10 x 1...3	1000	1000	800	475	350	300	275	200	185	-
100 x 10 x 1	1000	1000	775	450	325	300	250	175	185	1550
100 x 10 x 2	1000	1000	775	450	350	300	250	175	185	2750
100 x 10 x 3	1000	1000	775	450	350	300	275	175	185	3850

(1) Admissible nominal current for a temperature in the cabinet of 45°C and 80°C for the bars. Other assembly configurations: please consult us.

This document is not a contract. SOCOMEC reserves the right to modify features without prior notice in view of continued improvement. 2008 - 2009

Busbar supports

Current rating up to 630 A

Rigid copper bars
Insulated flexible copper bars
Busbar supports
Mechanical systems software
Distribution blocks
Power terminals
BLOCAL aluminium systems
Mounting rails and profiles

Selection guide

Unipolar busbar support

Nominal current (In): 100 A – 400 A – 500 A – 630 A

Short circuit current

Hexagonal insulators

see page C.53

SB 1

see page C.56

SB 2

see page C.56

SB 3

see page C.56

Icc up to 50 kA

Multipolar busbar support

Nominal current (In): 100 A – 400 A – 500 A – 630 A

Short circuit current

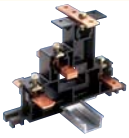

SB E 44

see page C.57

SB P 10

see page C.58

Icc up to 30 kA

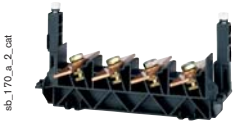

SB P 44

see page C.59

Icc up to 40 kA

This document is not a contract. SOCOMEC reserves the right to modify features without prior notice in view of continued improvement. 2008 - 2009

Unipolar flat mounting busbar supports

- **Female to female hexagonal insulator**

sb_104_a_1_cat

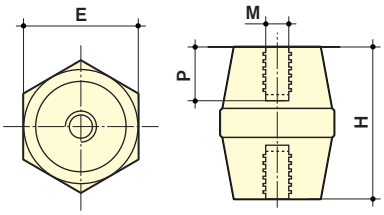

sb_105_a_1_x_cat

References

Height H (mm)	Insert M	Depth P (mm)	Diameter E (mm)	Pack qty	References
20	M4	4	19	1	5031 **2004**
25	M6	5	21	1	5031 **2506**
30	M6	6	33	1	5031 **3006**
30	M8	8	33	1	5031 **3008**
35	M6	8	33	1	5031 **3506**
35	M8	8	33	1	5031 **3508**
35	M10	8	33	1	5031 **3510**
40	M8	10	40	1	5031 **4008**
40	M10	10	40	1	5031 **4010**
45	M8	10	41	1	5031 **4508**
45	M10	10	41	1	5031 **4510**
50	M8	14	46	1	5031 **5008**
50	M10	14	46	1	5031 **5010**
60	M10	14	50	1	5031 **6010**
65	M10	18	55	1	5031 **6510**
70	M12	25	55	1	5031 **7012**

Characteristics

Height H (mm)	Insert M	Nominal voltage (V) AC/DC	Insulation voltage (VAC) 50 Hz 1 mn	Insulation voltage (VAC) Peak	Mechanical properties (daN) Flexion	Mechanical properties (daN) Tension	Max. tightening torque (Nm)
20	M4	500	3000	5500	70	170	9
25	M6	500	3000	5500	170	370	12
30	M6	1000	6000	11000	200	650	22
30	M8	1000	6000	11000	360	800	40
35	M6	1400	9000	16000	230	720	25
35	M8	1400	9000	16000	380	900	42
35	M10	1400	9000	16000	320	800	44
40	M8	2000	12000	21500	620	1200	50
40	M10	2000	12000	21500	620	1100	60
45	M8	2000	12000	21500	550	1200	55
45	M10	2000	12000	21500	550	1100	65
50	M8	2000	12000	21500	650	1800	60
50	M10	2000	12000	21500	650	1700	70
60	M10	2400	12000	27000	560	1600	85
65	M10	2400	12000	27000	750	1600	90
70	M12	2400	12000	27000	750	1500	135

Note: For maximum distances between two supports according to short-circuit withstand value, please consult us.

This document is not a contract. SOCOMEC reserves the right to modify features without prior notice in view of continued improvement. 2008 - 2009

Busbar supports

Current rating up to 630 A

Rigid copper bars
Insulated flexible copper bars
Busbar supports
Mechanical systems software
Distribution blocks
Power terminals
BLOCAL aluminium systems
Mounting rails and profiles

Unipolar flat mounting busbar supports

• **Male to female high withstand insulator**

sb_106_a_2_cat

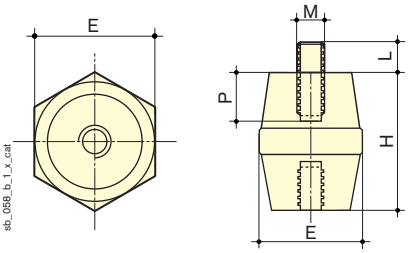

sb_058_b_1_x_cat

References

Height H (mm)	Insert M	Depth P (mm)	Diameter E (mm)	Length L (mm)	Pack qty	References
16	M4	5	15	10	1	5036 **1604**
16	M5	5	15	10	1	5036 **1605**
25	M5	5	22	10	1	5036 **2505**
25	M6	5	22	10	1	5036 **2506**
35	M8	10	30	15	1	5036 **3508**
35	M10	10	32	25	1	5036 **3510**
50	M8	15	36	25	1	5036 **5008**
50	M10	15	36	25	1	5036 **5010**
60	M10	16	55	25	1	5036 **6012**

Characteristics

See "Male to male high withstand insulator".

• **Male to male high withstand insulator**

sb_107_a_2_cat

References

Height H (mm)	Insert M	Diameter E (mm)	Length L (mm)	Pack qty	References
16	M4	15	10	1	5037 **1604**
16	M5	15	10	1	5037 **1605**
25	M5	22	10	1	5037 **2505**
25	M6	22	10	1	5037 **2506**
35	M8	30	15	1	5037 **3508**
35	M10	32	25	1	5037 **3510**
50	M8	36	25	1	5037 **5008**
50	M10	36	25	1	5037 **5010**
60	M10	55	25	1	5037 **6012**

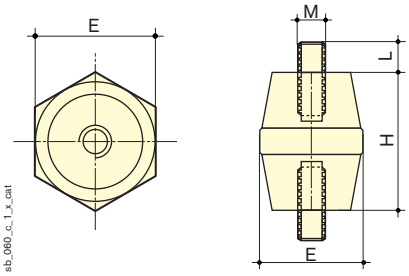

sb_060_c_1_x_cat

Characteristics

Height H (mm)	Insert M	Nominal voltage (V) AC/DC	Insulation voltage (VAC) 50 Hz 1 mn	Insulation voltage (VAC) Peak	Mechanical properties (daN) Flexion	Mechanical properties (daN) Tension	Max. tightening torque (Nm)
16	M4	500	3000	5500	100	150	3
16	M5	500	3000	5500	100	150	6
25	M5	1000	6000	11000	180	400	6
25	M6	1000	6000	11000	180	400	10
35	M8	1400	9000	16000	500	900	25
35	M10	1400	9000	16000	900	900	50
50	M8	2000	12000	21500	600	1000	25
50	M10	2000	12000	21500	600	1000	50
60	M10	2400	15000	27000	1000	2200	50

• **Threaded studs**

sb_121_a_2_cat

References

Length (mm)	Thread	Pack qty	References
20	M6	20	5032 **2006**
20	M8	20	5032 **2008**
25	M6	20	5032 **2506**
25	M8	20	5032 **2508**
30	M6	20	5032 **3006**
30	M8	20	5032 **3008**
40	M8	20	5032 **4008**
40	M10	20	5032 **4010**
50	M12	20	5032 **5012**

This document is not a contract. SOCOMEC reserves the right to modify features without prior notice in view of continued improvement. 2008 - 2009

Unipolar flat mounting busbar supports

The indicated short-circuit withstand values will apply if the maximum distances between two supports are maintained.
Values according to IEC 60865-1.

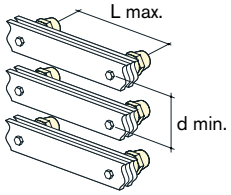

sb_164_a_1_x_cat

Characteristics

			Max. L (distance between centres of supports in mm) for						
		peak Icc rms Icc	24 kA 12 kA	48 kA 23 kA	63 kA 30 kA	82 kA 39 kA	114 kA 52 kA		
Height H (mm)	Insert M	Bar x no.						d min. (mm)	Iz (A) (1)
20	M4	15 x 5 x 1	400	100	-	-	-	45	220
20	M4	20 x 5 x 1	400	100	-	-	-	45	280
25	M6	15 x 5 x 1	550	135	-	-	-	45	220
25	M6	20 x 5 x 1	525	135	-	-	-	45	280
25	M6	25 x 5 x 1	575	145	-	-	-	50	330
30	M6	15 x 5 x 1	675	165	-	-	-	45	220
30	M6	20 x 5 x 1	650	165	-	-	-	45	280
30	M6	25 x 5 x 1	725	175	105	-	-	50	330
30	M8	15 x 5 x 1	850	250	155	-	-	45	220
30	M8	20 x 5 x 1	1000	250	155	-	-	45	280
30	M8	25 x 5 x 1	1000	275	170	100	-	50	330
35	M6	15 x 5 x 1	700	175	100	-	-	45	220
35	M6	20 x 5 x 1	675	170	100	-	-	45	280
35	M6	25 x 5 x 1	750	175	110	-	-	50	330
35	M8	15 x 5 x 1	850	275	160	-	-	45	220
35	M8	20 x 5 x 1	1000	275	160	-	-	45	280
35	M8	25 x 5 x 1	1000	300	175	105	-	50	330
35	M8	32 x 5 x 1	1000	325	175	110	-	55	410
35	M10	20 x 5 x 1	850	200	125	-	-	45	280
35	M10	25 x 5 x 1	950	225	135	-	-	50	330
35	M10	32 x 5 x 1	1000	250	150	-	-	55	410
40	M8	20 x 5 x 1	1000	325	175	110	-	45	280
40	M8	25 x 5 x 1	1000	350	200	125	-	50	330
40	M8	32 x 5 x 1	1000	375	225	135	-	55	410
40	M10	20 x 5 x 1	1000	325	175	110	-	45	280
40	M10	25 x 5 x 1	1000	350	200	125	-	50	330
40	M10	32 x 5 x 1	1000	375	225	135	-	55	410
45	M8	25 x 5 x 1	1000	425	250	150	-	50	330
45	M8	32 x 5 x 1	1000	475	175	160	-	55	410
45	M8	50 x 5 x 1	1000	625	350	200	110	75	600
45	M10	25 x 5 x 1	1000	425	250	145	-	50	330
45	M10	32 x 5 x 1	1000	450	250	160	-	55	410
45	M10	50 x 5 x 1	1000	600	350	200	110	75	600
50	M8	25 x 5 x 1	1000	450	250	155	-	50	330
50	M8	32 x 5 x 1	1000	475	275	170	-	55	410
50	M8	50 x 5 x 1	1000	650	375	225	115	75	600
50	M10	32 x 5 x 1	1000	525	300	175	-	55	410
50	M10	50 x 5 x 1	1000	700	400	225	125	75	600
60	M10	50 x 5 x 1	1000	700	400	225	125	75	600
65	M10	50 x 5 x 1	1000	775	450	250	135	75	600

(1) Admissible nominal current for a temperature in the cabinet of 45°C and 80°C for the bars.
Other assembly configurations: please consult us.

This document is not a contract. SOCOMEC reserves the right to modify features without prior notice in view of continued improvement. 2008 - 2009

Busbar supports

Current rating up to 630 A

Rigid copper bars
Insulated flexible copper bars
Busbar supports
Mechanical systems software
Distribution blocks
Power terminals
BLOCAL aluminium systems
Mounting rails and profiles

Unipolar flat mounting busbar supports

• **SB 1 - SB 2**

sb_108_a_2_cat

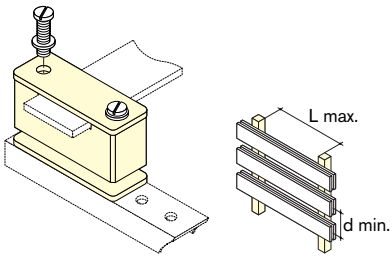

sb_150_a_1_x_cat

SB 1: 1 bar of max. width 25 mm.

SB 2: 1 bar of max. width 40 mm.

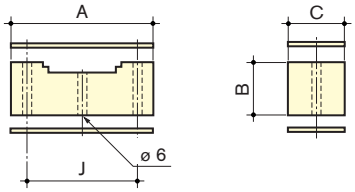

sb_014_c_1_x_cat

References

Support	Insulation voltage (VAC)	No. of bars	Bar width (mm)	Pack qty	References
SB 1	690	1	20-25	6	5021 **0110**
SB 2	690	1	32-40	6	5022 **0110**

Characteristics

		Max. L (distance between centres of supports in mm) for						
	peak Icc	24 kA	48 kA	63 kA	82 kA	114 kA		
	rms Icc	12 kA	23 kA	30 kA	39 kA	52 kA		
Support	Bar x no.						d min. (mm)	Iz (A) (1)
SB 1	20 x 3 x 1	650	325	250	175	135	50	210
SB 1	20 x 5 x 1	850	425	325	250	175	50	280
SB 1	25 x 5 x 1	1000	525	400	300	200	50	330
SB 2	32 x 5 x 1	1000	750	575	450	300	70	410
SB 2	40 x 5 x 1	1000	950	700	550	400	70	500

(1) Admissible nominal current for a temperature in the cabinet of 45°C and 80°C for the bars. Other assembly configurations: please consult us.

Dimensions (mm)

Support	A	B	C	J
SB 1	50	23	20	34
SB 2	68	23	23.5	50

• **SB 3**

sb_118_a_1_cat

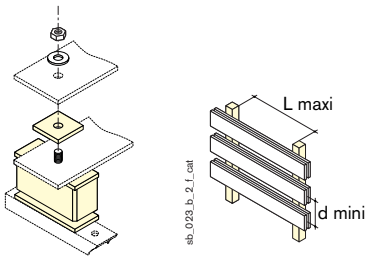

sb_008_a_1_x_cat

sb_023_b_2_l_cat

SB 3: 1 to 2 bars of max. width 63 mm.

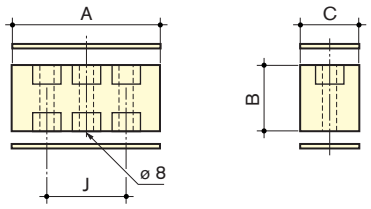

sb_089_b_1_x_cat

References

Support	Insulation voltage (VAC)	No. of bars	Bar width (mm)	Pack qty	References
SB 3 only	690	1 … 2	32-63	6	5023 **0111**
SB 3 pre-equipped(1)	690	1 … 2	32-63	6	5023 **0110**

(1) SB3 with screws.

Characteristics

	Max. L (distance between centres of supports in mm) for						
peak Icc	24 kA	48 kA	63 kA	82 kA	114 kA		
rms Icc	12 kA	23 kA	30 kA	39 kA	52 kA		
Bar x nb						d min. (mm)	Iz (A) (1)
32 x 5 x 2	1000	1000	925	700	500	70	580
40 x 5 x 2	1000	1000	1000	1000	1000	70	700
50 x 5 x 2	1000	1000	1000	925	675	75	850
63 x 5 x 2	1000	1000	1000	1000	1000	85	1000

(1) Admissible nominal current for a temperature in the cabinet of 45°C and 80°C for the bars. Other assembly configurations: please consult us.

Dimensions (mm)

Support	A	B	C	J
SB 3 only	65	32	28	36
SB 3 pre-equipped	65	32	28	36

This document is not a contract. SOCOMEC reserves the right to modify features without prior notice in view of continued improvement. 2008 - 2009

4 pole stair type supports

- **SB E 44**

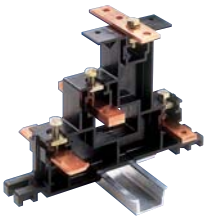

sb_038_a_3_cat

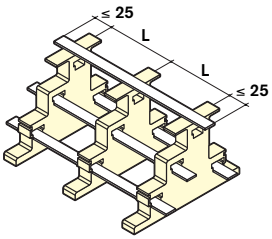

sb_041_b_1_x_cat

Type 1: set of busbars including 2 (or more) equally spaced SB E 44 supports.

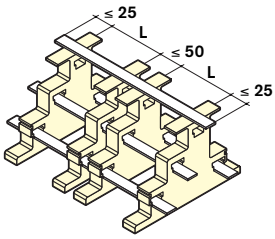

sb_047_a_1_x_cat

Type 2: set of busbars including 3 (or more) SB E 44 supports with doubled intermediary supports.

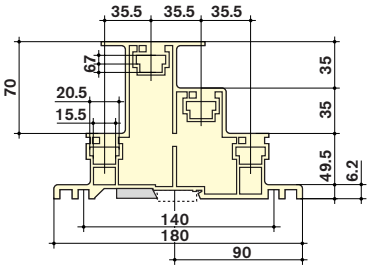

sb_036_e_1_x_cat

Fixation by oblong holes: distance between to holes 150 to 170 mm.

Reference

No. of poles	Pack qty	Reference
4 P	1	5028 **0410**

Accessories

Description of accessories	Pack qty	References
270 mm long protection cover kit	1	5028 **0411**
420 mm long protection cover kit	1	5028 **0412**
620 mm long protection cover kit	1	5028 **0413**
Set of 20 adaption protection cover spacers	1	5028 **0415**

Characteristics

		Max. L (distance between centres of supports in mm) for						
	peak Icc	10 kA	15 kA	24 kA	38 kA	48 kA	63 kA	
	rms Icc	6 kA	9 kA	12 kA	19 kA	23 kA	30 kA	
Support	Bar x no.							Iz (A) (1)
Type 1	15 x 3 x 1	950	625	400	250	175	-	160
Type 1	15 x 5 x 1	1000	825	500	300	175	-	220
Type 1	15 x 6 x 1	1000	900	550	300	200	-	250
Type 1	15 x 8 x 1	1000	1000	650	300	200	-	290
Type 1	20 x 3 x 1	1000	825	525	300	175	-	210
Type 1	20 x 5 x 1	1000	1000	675	300	175	-	280
Type 1	20 x 6 x 1	1000	1000	750	300	175	-	310
Type 1	20 x 8 x 1	1000	1000	775	300	175	-	370
Type 1	32 x 5 x 1	1000	1000	675	250	170	-	410
Type 1	32 x 6 x 1	1000	1000	675	250	170	-	460
Type 2	15 x 3 x 1	950	625	400	250	200	150	160
Type 2	15 x 5 x 1	1000	825	500	325	250	175	220
Type 2	15 x 6 x 1	1000	900	550	350	275	200	250
Type 2	15 x 8 x 1	1000	1000	650	400	325	225	290
Type 2	20 x 3 x 1	1000	825	525	325	250	200	210
Type 2	20 x 5 x 1	1000	1000	675	425	325	225	280
Type 2	20 x 6 x 1	1000	1000	750	450	375	225	310
Type 2	20 x 8 x 1	1000	1000	850	525	375	225	370
Type 2	32 x 5 x 1	1000	1000	1000	525	325	175	410
Type 2	32 x 6 x 1	1000	1000	1000	525	325	175	460

(1) Admissible nominal current for a temperature in the cabinet of 45°C and 80°C for the bars. Other assembly configurations: please consult us.

Nota : Iz is given for solid bars only.

This document is not a contract. SOCOMEC reserves the right to modify features without prior notice in view of continued improvement. 2008 - 2009

Busbar supports

Current rating up to 630 A

Rigid copper bars
Insulated flexible copper bars
Busbar supports
Mechanical systems software
Distribution blocks
Power terminals
BLOCAL aluminium systems
Mounting rails and profiles

Multipolar flat mounting busbar supports with fixed interphase

• **SB P 10**

sb_130_a_3_cat

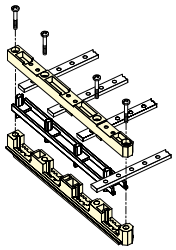

sb_159_a_1_x_cat

SB P 10: 1 bar with a thickness of 5 or 10 mm, width 12, 20, 25 or 30 mm.

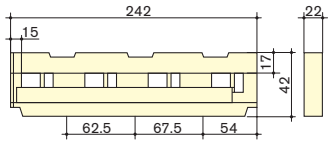

sb_144_a_1_x_cat

Reference

No. of poles	Insulation voltage (VAC)	Bar width (mm)	Pack qty	Reference
4 P	690	12-30	1	5026 **0460**

Characteristics

	Max. L (distance between centres of supports in mm) for						
peak Icc	10 kA	15 kA	24 kA	48 kA	63 kA		
rms Icc	6 kA	9 kA	12 kA	23 kA	30 kA		
Bar x no.						d (mm)	Iz (A) (1)
12 x 5 x 1	1 000	475	175	-	-	60	180
20 x 5 x 1	1 000	1 000	650	165	-	60	280
25 x 5 x 1	1 000	1 000	650	160	-	60	338
30 x 5 x 1	1 000	1 000	850	200	120	60	390
25 x 10 x 1	1 000	1 000	1 000	250	150	60	508
30 x 10 x 1	1 000	1 000	1 000	350	200	60	580

(1) Admissible nominal current for a temperature in the cabinet of 45°C and 80°C for the bars. Other assembly configurations: please consult us.

This document is not a contract. SOCOMEC reserves the right to modify features without prior notice in view of continued improvement. 2008 - 2009

4 pole angled mounting busbar supports with fixed interphase

- **Set of 2 SB P 44 busbar supports**

sb_170_a_3_cat

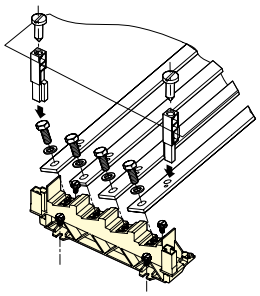

sb_165_b_1_x_cat

SB P 44: 1 bar with a thickness of 5 or 10 mm, width 20, 25, 30 or 32 mm.

Note: protection cover not supplied.

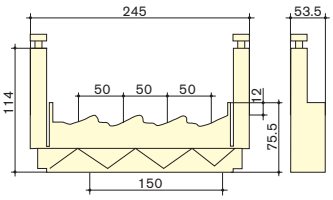

sb_147_b_1_x_cat

Reference

No. of poles	Insulation voltage (VAC)	Bar width (mm)	Pack qty	Reference
4 P	1 000	20-32	1	5026 **0450**

Characteristics

	Max. L (distance between centres of supports in mm) for							
peak Icc	10 kA	15 kA	24 kA	48 kA	63 kA	82 kA		
rms Icc	6 kA	9 kA	12 kA	23 kA	30 kA	39 kA		
Bar x no.							d min. (mm)	Iz (A) (1)
20 x 5 x 1	1000	1000	800	350	200	125	50	280
25 x 5 x 1	1000	1000	1000	350	200	125	50	330
32 x 5 x 1	1000	1000	1000	350	200	120	50	390
25 x 10 x 1	1000	1000	1000	350	200	125	50	500
30 x 10 x 1	1000	1000	1000	350	200	120	50	580
32 x 10 x 1	1000	1000	1000	350	200	120	50	610

(1) Admissible nominal current for a temperature in the cabinet of 45°C and 80°C for the bars. Other assembly configurations: please consult us.

This document is not a contract. SOCOMEC reserves the right to modify features without prior notice in view of continued improvement. 2008 - 2009

Mechanical systems software

Rigid copper bars
Insulated flexible copper bars
Busbar supports
Mechanical systems software
Distribution blocks
Power terminals
BLOCAL aluminium systems
Mounting rails and profiles

sb_142_b_gb_1_cat

Functions

Mechanical systems is a software which is used to size bar sets. It defines the best bar section and distance between each support for the electrical characteristics of the panel.

It runs in a Windows® 95, 98, 2000, NT or XP environment.

General characteristics

- **Mechanical systems** assists you in designing your set of bars by indicating:
  - the maximum acceptable intensity in the bars taking into account their material, bar type, panel temperature…,
  - the SOCOMEC supports compatible with your configuration, in an electronic list of our products,
  - the appropriate distance between supports according to the short circuit current (efficient or peak) and to the distance between phases.
- **Mechanical Systems** carries out its calculations in accordance with standard IEC 60439-1.
- **Mechanical Systems** summarizes your choices in a simple and printable spreadsheet.
- **Mechanical Systems** is multilingual, with one simple click, you can work in:
  - french,
  - english,
  - german,
  - dutch,
  - spanish,
  - italian,
  - polish.

bd_03_04_01

Find “Mechanical systems software” on the SOCOMEC web Site.

www.socomec.com

This document is not a contract. SOCOMEC reserves the right to modify features without prior notice in view of continued improvement. 2008 - 2009

sb_128_a_1_cat

Reference

Mechanical systems software	consult us

Applications

• Easy to use

Easy to use through a single screen enabling you to define the whole set of bars.

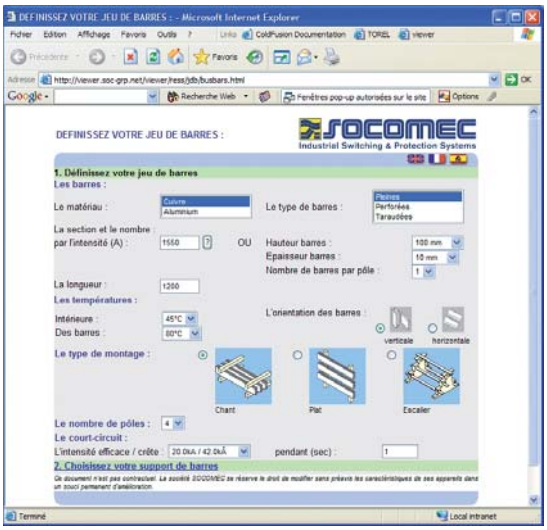

sb_201_a_1_x_cat

• Bar selection

Part for selecting bars.

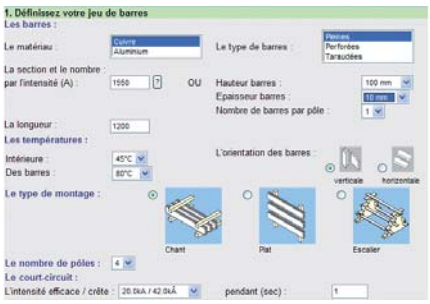

sb_202_a_1_x_cat

• Selecting busbar supports

Part for selecting supports from an "electronic" catalogue of our products, illustrated with photos.

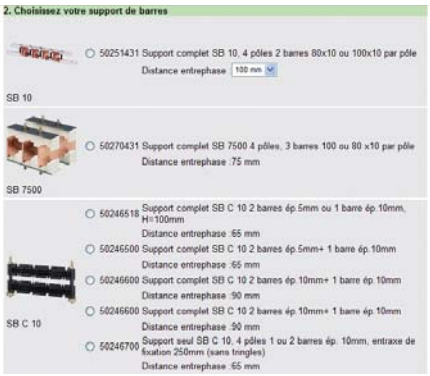

sb_203_a_1_x_cat

• Calculation of distance between busbar supports

A part which calculates the distance between each support according to the electric parameters defined in your table.

sb_204_a_1_x_cat

• Spreadsheet print out

A spreadsheet summarising on one page all choices and calculations which can be printed out and stored.

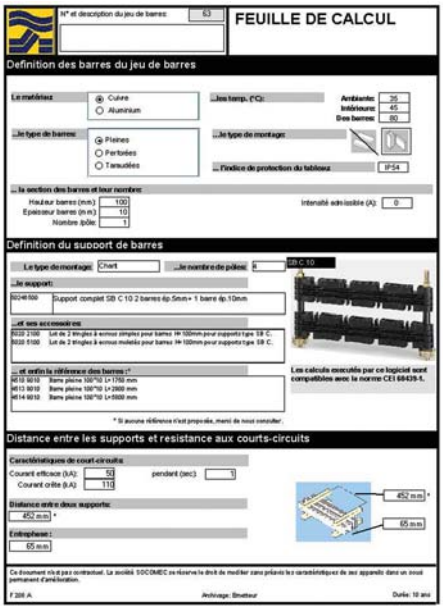

sb_141_a_1_f_cat

bd_03_04_01

Find "Mechanical systems software" on the SOCOMEC web Site.

www.socomec.com

This document is not a contract. SOCOMEC reserves the right to modify features without prior notice in view of continued improvement. 2008 - 2009

Distribution blocks

Rigid copper bars
Insulated flexible copper bars
Busbar supports
Mechanical systems software
Distribution blocks
Power terminals
BLOCAL aluminium systems
Mounting rails and profiles

repar_008_a_1_cat

repar_028_a_1_cat

repar_013_a_1_cat

repar_027_a_1_cat

repar_020_b_1_cat

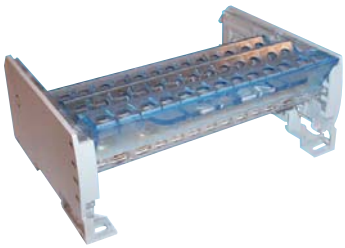

repar_038_a_1_cat

repar_030_a_1_cat

barre_006_a_1_cat

Functions

SOCOMEC **distribution blocks** allow easy connection of conductors.

They are installed downstream of a switch, a commutator or a fuse-combination switch.

Conformity to standards

- IEC 60439-1
- EN 60439-1
- NF C 20455

General characteristics

- Insulating voltage:
  - ferrules terminal distribution block: 500 V,
  - modular row terminal distribution block: 690 V,
  - wire-terminal distribution block: 1000 V.
- Impulse voltage:
  - ferrules terminal distribution block: 6 kV,
  - modular terminal distribution block: 6 kV,
  - wire-terminal distribution block: 8 kV.
- Self-extinguishing: 960°C.

The range

- 7 from 80 to 630 A in 1, 2, 3 and 4 pole ratings.
- 2 connection modes:
  - direct or ferrules,
  - cable lugs.

This document is not a contract. SOCOMEC reserves the right to modify features without prior notice in view of continued improvement. 2008 - 2009

Direct or cable connection

• Unipolar distribution blocks

repar_008_a_2_cat

IP20 direct or cable connection distribution blocks which can be clipped onto a symmetric DIN rail.

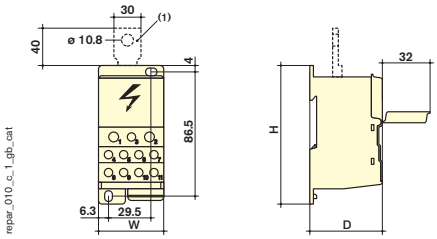

repar_010_c_1_gb_cat

References

Rating (A)	Dimensions W x H x D	Icc (kA eff)	References
80	47 x 66 x 27	1.9	5410 **1008**
125	46 x 74 x 27	4.4	5410 **1012**
175	42.5 x 71 x 45	11	5410 **1017**
250	44.5 x 96 x 50	21	5410 **1025**
400	44.5 x 96 x 50	21	5410 **1040**

Connections

Rating (A)	Power supply section (mm²)	No. of phases per section (mm²)
80	< 16	4 x 6 + 2 x 16
125	< 35	6 x 2.5 to 16
175	16 ... 70	10 x 2.5 to 16
250	35 …120	2 x 25 + 5 x 16 + 4 x 10
400	95 …185	2 x 25 + 5 x 16 + 4 x 10

Accessories

Description of accessories	References
Assembly kit for rating 250 A (1)	5410 **0025**
Assembly kit for rating 400 A (1)	5410 **0040**

(1) Linking part enabling direct assembly on the connecting lugs of the switching device.

• Row distribution blocks

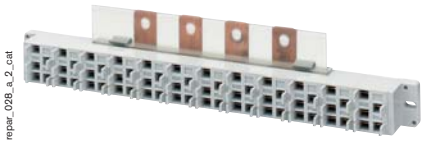

repar_028_a_2_cat

IP20 direct or cable connection distribution blocks which can be clipped onto a symmetric DIN rail.

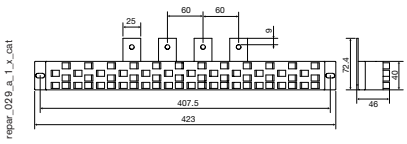

repar_029_a_1_x_cat

Connection
- *12 three pole/four pole connections.*
- *24 single phase connections.*
- *Maximum current = 63 A.*

References

Rating (A)	Length	With plug and cable(1)	Icc (kA eff)	References
250 (2)	1 row	yes	10	5420 **2426**
250 (2)	1 row	no	10	5421 **2426**

(1) Delivered with special 6 mm².
L = 120 mm: 12 black plugs, 12 blue plugs.
(2) Preferably the terminations will be distributed over the entire number or terminals.

Cables

Rating (A)	Type	Length (mm)	Colour	Pack qty	References
40	6 mm² cable	120	Blue	10	5421 **1006**
40	6 mm² cable	120	Black	10	5421 **1016**
40	6 mm² cable	320	Blue	10	5421 **1106**
40	6 mm² cable	320	Black	10	5421 **1116**
63	10 mm² cable	320	Blue	10	5421 **1101**
63	10 mm² cable	320	Black	10	5421 **1111**
40	connector for 2.5 mm² cable	-	-	20	5421 **0025**
63	connector for 6 mm² cable	-	-	20	5421 **0125**

This document is not a contract. SOCOMEC reserves the right to modify features without prior notice in view of continued improvement. 2008 - 2009

Distribution blocks

Rigid copper bars
Insulated flexible copper bars
Busbar supports
Mechanical systems software
Distribution blocks
Power terminals
BLOCAL aluminium systems
Mounting rails and profiles

Direct or cable connection

• Monoblock multipolar distribution block

repar_039_a_1_cat

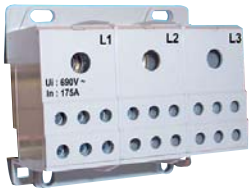

repar_036_b_1_cat

References

Rating (A)	No. of poles	Dimensions H x W x D (mm)	References
125	4 P	98 x 74.5 x 45	5410 **4112**
175	3 P	80 x 71.5 x 42.5	5410 **3017**

Connections

Rating (A)	No. connections per section (mm²)
125	Phase: 5 x 1 to 6 + 2 x 1.5 to 10 / Neutral: 6 x 1.5 to 10 + 4 x 1.5 to 6
175	6 x 2.5 to 16

• Bridge multipolar distribution block

repar_027_a_2_cat

repar_038_a_2_cat

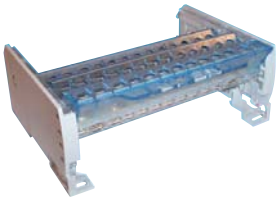

IP20 direct or cable connection distribution blocks, which can be clipped onto a symmetric DIN rail.

repar_009_a_1_gb_cat

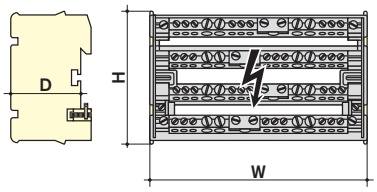

References

Rating (A)	No. of poles	No. connections per section (mm²) (1)	Dimensions H x W x D (mm)	Icc (kA rms) (2)	References
125	4 P	2 x 25 + 7 x 10	85 x 88 x 48	3	5420 **4108**
125	4 P	2 x 25 + 2 x 16 + 9 x 10	85 x 129 x 48	4.2	5420 **4112**
160	4 P	1 x 35 + 3 x 25 + 8 x 16	90 x 160.5 x 50	6.2	5420 **4016**

(1) Maximum section of flexible cable.
(2) Short circuit withstand (rms value) 1 second.

• Earth bar

barre_006_a_2_cat

barre_012_a_1_cat

References

Mounting	No of feeders per section (mm²)	Material	L (mm)	Pack qty	References
2 vis M4	10 x 16 + 2 x 35	brass	120	10	5414 **0120**
2 vis M6	41 x 16 + 2 x 35	brass	470	10	5414 **0470**

This document is not a contract. SOCOMEC reserves the right to modify features without prior notice in view of continued improvement. 2008 - 2009

Terminal connections

• Multipolar distribution blocks

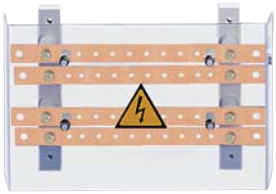

repar_007_b_1_cat

Terminal connections distribution blocks with front protection cover against direct contact.

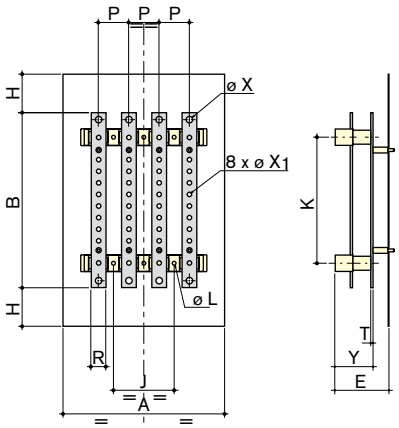

repar_004_b_1_x_cat

References

Rating (A)	No. of poles	Icc (kA rms)	No of feeders per section (mm²)	References
160	3 P	10	2 x 95 + 8 x 25	5412 **3016**
160	4 P	10	2 x 95 + 8 x 25	5412 **4016**
250	3 P	15	2 x 150 + 8 x 50	5412 **3025**
250	4 P	15	2 x 150 + 8 x 50	5412 **4025**
400	3 P	21	2 x 240 + 8 x 95	5412 **3040**
400	4 P	21	2 x 240 + 8 x 95	5412 **4040**
630	3 P	21	2 x 300 + 8 x 150	5412 **3063**
630	4 P	21	2 x 300 + 8 x 150	5412 **4063**

Dimensions

Rating (A)	No. of poles	A	B	E	H	J	K	ØL	P	R	T	ØX	$ØX_1$	Y
160	3 P	154	286	73	46.5	158	207	6.5	36	20	4	9	6	54
160	4 P	190	286	73	46.5	158	207	6.5	36	20	4	9	6	54
250	3 P	210	307	83	57.5	50	222	7	50	25	4	11	8	56
250	4 P	260	307	83	57.5	100	222	7	50	25	4	11	8	56
400	3 P	281	375	116	82.5	65	270	8	65	32	5	14.5	8.5	82
400	4 P	346	375	116	82.5	130	270	8	65	32	5	14.5	8.5	52
630	3 P	271	438	117	90.5	65	333	8	65	40	6	14.5	10.5	83
630	4 P	346	438	117	90.5	130	333	8	65	40	6	14.5	10.5	83

• SIRCO multipolar distribution blocks

repar_020_b_2_cat

Terminal connections distribution blocks with front protection cover against direct contact (breaking device not supplied).

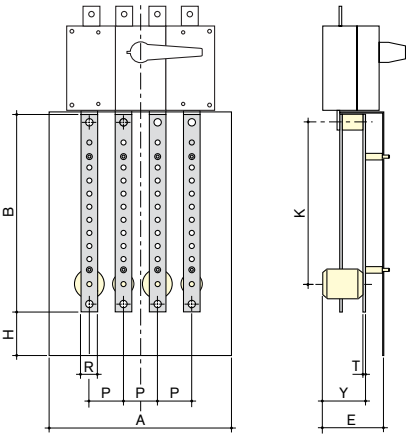

repar_003_c_1_x_cat

References

Rating (A)	No. of poles	Icc (kA rms)	No of feeders per section (mm²)	References
160	3 P	10	1 x 95 + 8 x 25	5411 **3016**
160	4 P	10	1 x 95 + 8 x 25	5411 **4016**
250	3 P	15	1 x 150 + 8 x 50	5411 **3025**
250	4 P	15	1 x 150 + 8 x 50	5411 **4025**
400	3 P	21	1 x 240 + 8 x 95	5411 **3040**
400	4 P	21	1 x 240 + 8 x 95	5411 **4040**
630	3 P	21	1 x 300 + 8 x 150	5411 **3063**
630	4 P	21	1 x 300 + 8 x 150	5411 **4063**

Dimensions

Rating (A)	No. of poles	A	B	E	H	K	P	R	T	Y
160	3 P	154	286	73	46.5	261.5	36	20	4	54
160	4 P	190	286	73	46.5	261.4	36	20	4	54
250	3 P	210	307	83	57.5	279	50	25	4	56
250	4 P	260	307	83	57.5	279	50	25	4	56
400	3 P	281	375	116	82.5	340	65	32	5	82
400	4 P	346	375	116	82.5	340	65	32	5	82
630	3 P	271	438	117	90.5	410.5	65	40	6	83
630	4 P	346	438	117	90.5	410.5	65	40	6	83

This document is not a contract. SOCOMEC reserves the right to modify features without prior notice in view of continued improvement. 2008 - 2009

Distribution blocks

Rigid copper bars
Insulated flexible copper bars
Busbar supports
Mechanical systems software
Distribution blocks
Power terminals
BLOCAL aluminium systems
Mounting rails and profiles

Terminal connections

- **Multipolar distribution blocks for FUSERBLOC and SIRCO VM2**

repar_013_a_2_cat

References

Rating (A)	Fuse size	No. of poles	Device	No of feeders per section (mm²)	References
100/125/160	22x58 / 00	3 P	Fuserbloc	10 x 16 + 2 x 35 + 3 x M6	5413 **3016**
100/125/160	22x58 / 00	4 P	Fuserbloc	10 x 16 + 2 x 35 + 3 x M6	5413 **4016**
160	0	3 P	Fuserbloc	10 x 16 + 2 x 35 + 3 x M6	5413 **3017**
160	0	4 P	Fuserbloc	10 x 16 + 2 x 35 + 3 x M6	5413 **4017**
250	1	3 P	Fuserbloc	11 x M8	5413 **3025**
250	1	4 P	Fuserbloc	11 x M8	5413 **4025**
400	2	3 P	Fuserbloc	11 x M8	5413 **3040**
400	2	4 P	Fuserbloc	11 x M8	5413 **4040**
160/200		3 P	Sirco VM2	10 x 16 + 2 x 35 + 3 x M6	5413 **3020**
160/200		4 P	Sirco VM2	10 x 16 + 2 x 35 + 3 x M6	5413 **4020**

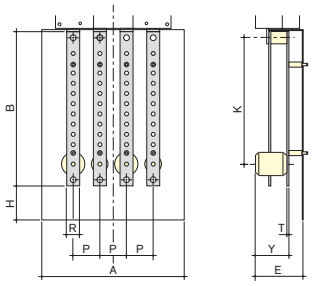

repar_041_a_1_x_cat

Dimensions

Rating (A)	No. of poles	Device	A	B	E	H	K	P	R	T	Y
100/125/160	3 P	Fuserbloc	110	260	61	20	233	36	20	4	39
100/125/160	4 P	Fuserbloc	145	260	61	20	233	36	20	4	39
160	3 P	Fuserbloc	150	260	61	20	233	50	20	4	39
160	4 P	Fuserbloc	200	260	61	20	233	50	20	4	39
250	3 P	Fuserbloc	185	340	67	15	300	60	32	5	45
250	4 P	Fuserbloc	245	340	67	15	300	60	32	5	45
400	3 P	Fuserbloc	210	340	67	15	300	66	32	5	45
400	4 P	Fuserbloc	275	340	61	15	300	66	32	5	45
160/200	3 P	Sirco VM2	142	260	61	20	233	27.5	20	4	39
160/200	4 P	Sirco VM2	142	260	61	20	233	27.5	20	4	39

- **Plug-in unit for 5 to 6.3 mm bars**

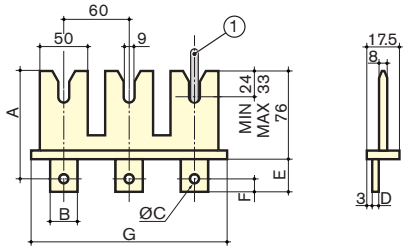

sb_186_a_1_x_cat

1. Dropper busbar with a thickness of 5 to 6.3 mm.

References

Rating (A)	No. of poles	Icc (kA rms)	References
125/160	3 P	65	3699 **3P16**
125/160	4 P	65	3699 **6P16**
250/400	3 P	65	3699 **3P39**
250/400	4 P	65	3699 **6P39**
630/800	3 P	65	3699 **3P80**
630/800	4 P	65	3699 **6P80**

Dimensions

Rating (A)	No. of poles	A	B	C	D	E	F	G
125/160	3 P	99	20	M8	3	23	10	186
125/160	4 P	99	20	M8	3	23	10	248
250/400	3 P	101.5	25	M10	4	28	12.5	186
250/400	4 P	101.5	25	M10	4	28	12.5	248
630/800	3 P	101.5	25	M10	4	28	12.5	186
630/800	4 P	101.5	25	M10	4	28	12.5	248

This document is not a contract. SOCOMEC reserves the right to modify features without prior notice in view of continued improvement. 2008 - 2009

Terminal connections

• Stair type multipolar distribution blocks

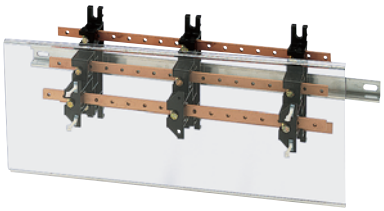

repar_012_b_1_cat

Stair type distribution blocks with threaded holes. Can be clipped onto a symmetric DIN rail. Factory assembled and supplied without protection cover.

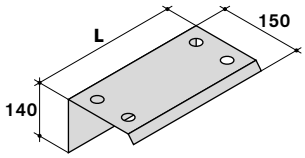

sb_043_b_1_x_cat

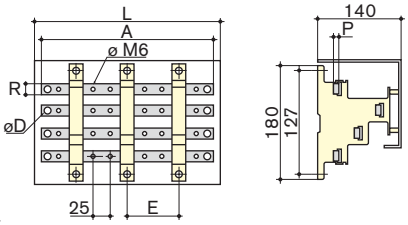

repar_040_a_1_x_cat

References

Rating (A)	L (mm)	No.of poles	Icc (kA rms)	No. of supports	Distribution blocks References	Protection cover References
160	270	4 P	25	2	5028 **0421**	5028 **0411**
160	420	4 P	17	2	5028 **0451**	5028 **0412**
160	620	4 P	20	3	5028 **0471**	5028 **0413**
250	270	4 P	30	2	5028 **0423**	5028 **0411**
250	420	4 P	22	2	5028 **0453**	5028 **0412**
250	620	4 P	18	3	5028 **0473**	5028 **0413**
400	270	4 P	24	2	5028 **0425**	5028 **0411**
400	420	4 P	21	2	5028 **0455**	5028 **0412**
400	620	4 P	13	3	5028 **0475**	5028 **0413**

Accessories

Type	Pack qty	Reference
Spacer for protection cover	1	5028 **0415**

Dimensions

Rating (A)	No. of feeders	A	ØD	E	L	P	R
160	9	250	8	150	270	5	15
160	15	400	8	300	420	5	15
160	21	600	8	250	620	5	15
250	9	250	10	150	270	5	20
250	15	400	10	300	420	5	20
250	21	600	10	250	620	5	20
400	8	225	12	150	270	5	32
400	14	375	12	300	420	5	32
400	20	620	12	250	620	5	32

• Disconnectable solid neutral links

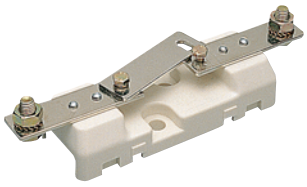

repar_030_a_2_cat

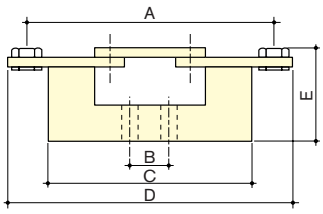

shunt_012_a_1_x_cat

References

Rating (A)	Connection type	References
160	Direct or cable connection	NB10 **0000**
160	Terminal connections	NB16 **0000**
250	Terminal connections	NB25 **0000**
400	Terminal connections	NB40 **0000**
630	Terminal connections	NB63 **0000**

Dimensions

Rating (A)	A	B	C	D	E	Max. width (mm)
160	111	25	86	117	32	32
160	111	25	86	117	44	32
250	150	25	120	172	45	32
400	175	25 (1)	151	200	60	55
630	175	25 (1)	151	200	60	55

(1) Offset fixing holes.

This document is not a contract. SOCOMEC reserves the right to modify features without prior notice in view of continued improvement. 2008 - 2009

Power terminals

Rigid copper bars
Insulated flexible copper bars
Busbar supports
Mechanical systems software
Distribution blocks
Power terminals
BLOCAL aluminium systems
Mounting rails and profiles

bom_016_a_1_cat

bom_013_a_1_cat

bom_011_a_1_cat

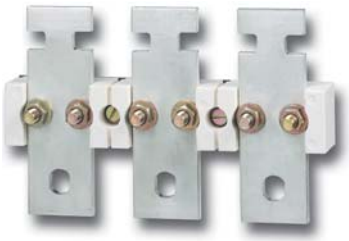
bom_014_a_1_cat

bom_015_a_1_cat

Functions

SOCOMEC **power terminals** provide connections for power circuits.

They consist of connection plates fixed onto insulating brackets.

Conformity to standards

- IEC 60439-1
- DIN 46206

General characteristics

- Tin-plated aluminium plates.
- High dielectric withstand.
- High mechanical resistance.
- High resistance to damp heat (“tropicalized” in origin).

The range

- 5 terminal models from 250 to 630 A, with 3 and 4 poles.
- 2 methods of connection:
  - by lugs,
  - by cable clamps.
- Accessories: interphase screen, front cover to protect against unintentional contact.

- **Type 1 power terminals**

bom_011_a_2_cat

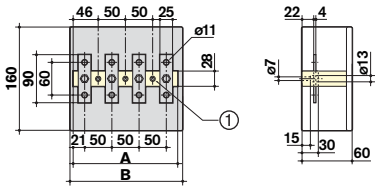

bom_001_c_1_x_cat

1. M6 screws mounting.

References

I_{max} (A)	Top and bottom connections	No. of poles	A (mm)	B (mm)	References
250	lugs	3 P	142	151	4501 **0003**(1)
250	lugs	4 P	192	201	4501 **0004**(1)

(1) Terminals supplied without terminal shroud.

Accessories

Type	References
Protective cover for 3 pole terminals	4501 **1003**
Protective cover for 4 pole terminals	4501 **1004**

This document is not a contract. SOCOMEC reserves the right to modify features without prior notice in view of continued improvement. 2008 - 2009

- **Type 2 power terminals**

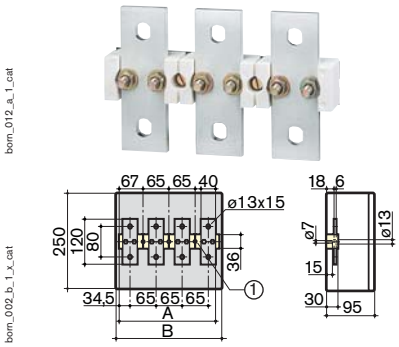

1. M6 screws mounting.

References

I_{max} (A)	Top and bottom connections	No. of poles	A (mm)	B (mm)	References
630	lugs	3 P	197	206	4502 **0003**(1)
630	lugs	4 P	262	271	4502 **0004**(1)

(1) Terminals supplied without terminal shroud.

Accessories

Type	References
Protective cover for 3 pole terminals	4502 **1003**
Protective cover for 4 pole terminals	4502 **1004**
Interphase screen	4500 **0107**

- **Type 3 power terminals**

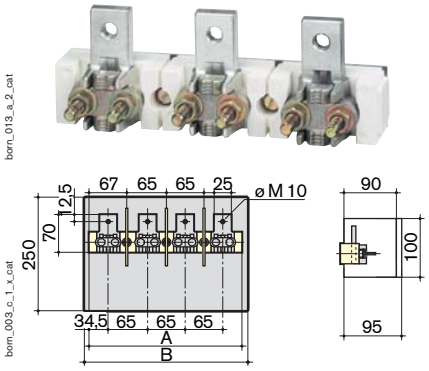

References

I_{max} (A)	Connections Top	Connections Bottom	No. of poles	A (mm)	B (mm)	References
400	lugs	cable clamps(1)	3 P	197	206	4503 **0003**(2)
400	lugs	cable clamps(1)	4 P	262	271	4503 **0004**(2)

(1) 185 mm² cable clamps included.
(2) Terminals supplied without terminal shroud.

Accessories

Type	References
Protective cover for 3 pole terminals	4502 **1003**
Protective cover for 4 pole terminals	4502 **1004**
Interphase screen	4500 **0106**

- **Type 4 power terminals**

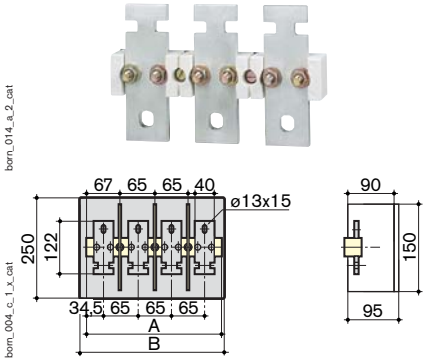

References

I_{max} (A)	Connections Top	Connections Bottom	No. of poles	A (mm)	B (mm)	References
500	lugs	cable clamps(1)	3 P	197	206	4504 **0003**(2)
500	lugs	cable clamps(1)	4 P	262	271	4504 **0004**(2)

(1) 240 mm² cable clamps not included.
(2) Terminals supplied without terminal shroud.

Accessories

Type	References
Protective cover for 3 pole terminals	4502 **1003**
Protective cover for 4 pole terminals	4502 **1004**
Interphase screen	4500 **0107**

- **Type 5 power terminals**

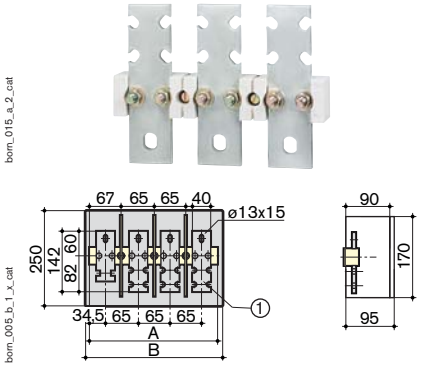

1. For 300 mm² cable clamps.

References

I_{max} (A)	Connections Top	Connections Bottom	No. of poles	A (mm)	B (mm)	References
630	lugs	cable clamps(1)	3 P	197	206	4505 **0003**(2)
630	lugs	cable clamps(1)	4 P	262	271	4505 **0004**(2)

(1) 300 mm² cable clamps not included.
(2) Terminals supplied without terminal shroud.

Accessories

Type	References
Protective cover for 3 pole terminals	4502 **1003**
Protective cover for 4 pole terminals	4502 **1004**
Interphase screen	4500 **0108**

This document is not a contract. SOCOMEC reserves the right to modify features without prior notice in view of continued improvement. 2008 - 2009

BLOCAL aluminium systems

Rigid copper bars
Insulated flexible copper bars
Busbar supports
Mechanical systems software
Distribution blocks
Power terminals
BLOCAL aluminium systems
Mounting rails and profiles

bloca_004_a_1_cat

bloca_005_a_1_cat

Functions

BLOCAL System is a set of aluminium profiles and accessories.

Assembled to form rigid structures, frames or cells, they allow the fixing of any electrical equipment.

Advantages

The BLOCAL system offers:

- high mechanical strength,
- very good impact and vibration resistance thanks to a patented assembly system,
- high resistance to damp heat (“tropicalized” in origin),
- amagnetic structure.

Conformity to standards

- EN 60715

Available on request

- Custom-made frames.
- Supplied in kits or factory mounted.
- Single or double sided.
- With optional extras - examples:
  - roller shutter,
  - glazed door,
  - sheet steel or aluminium panel,
  - with standard or 19” assembly frame,
  - perforated assembly grid,
  - pivoting frame, etc.

The range

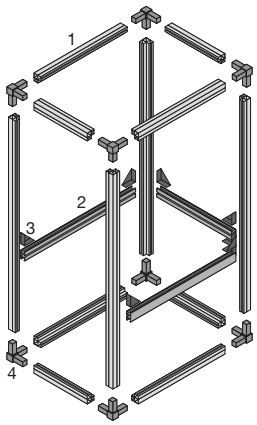

bloca_038_e_1_x_cat

1. Double “D” profile - ref. SA10 4207.
2. Triple “N” - ref. SA10 4205.
3. Bracket - ref. SA10 4260.
4. Tripod - ref. SA10 4218.

Standard chassis

- Supplied in kit form complete with assembly screws and mounting instructions.
- Use of a tripod system enables assembly by a single person.
- The load should be distributed equally across the complete height of the chassis. For heavy loads, please consult us.

Made to measure chassis

Please consult us.

Profiles

10 references in 2, 3 and 6 m lengths.

This document is not a contract. SOCOMEC reserves the right to modify features without prior notice in view of continued improvement. 2008 - 2009

Mounting rails and profiles

Rigid copper bars
Insulated flexible copper bars
Busbar supports
Mechanical systems software
Distribution blocks
Power terminals
BLOCAL aluminium systems
Mounting rails and profiles

elcha_039_a_1_cat

Functions

SOCOMEC frame components come in steel, 304 L stainless steel or aluminium (profiles and accessories) and allow the fixing of any electrical equipment.

Conformity to standards

- EN 60715

General characteristics

- High mechanical strength.
- Good corrosion resistance (bichromated zinc-coated steel, stainless steel or aluminium).

The range

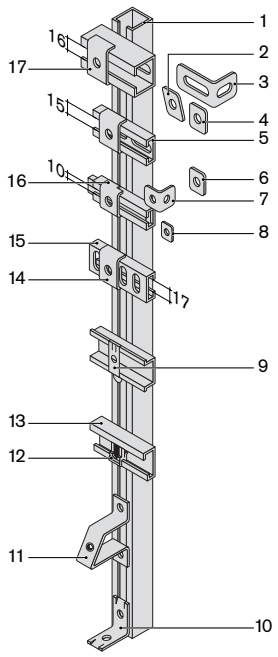

elcha_003_c_1_x_cat

1. Profile C 20 x 14 - 30 x 15 - 35 x 35.
2. Diamond shaped nut 33 x 11 - 34 x 20.
3. Bracket 45 x 60 x 25
   2 oblong holes: 35 x 9 or 25 x 9.
4. Rectangular nut 28 x 35.
5. Profile C 30 x 15.
6. Square nut 25 x 25.
7. Bracket 25 x 25 x 19.
8. Square nut 15.5 x 15.5.
9. Fixomega.
10. Bracket 36 x 36 x 23.
11. Terminal block support.
12. Fixocap.
13. Asymmetrical profile.
14. Straddle bracket 30 x 15.
15. Cable support profile.
16. Straddle bracket 20 x 14.
17. Straddle bracket 35 x 35.

This document is not a contract. SOCOMEC reserves the right to modify features without prior notice in view of continued improvement. 2008 - 2009

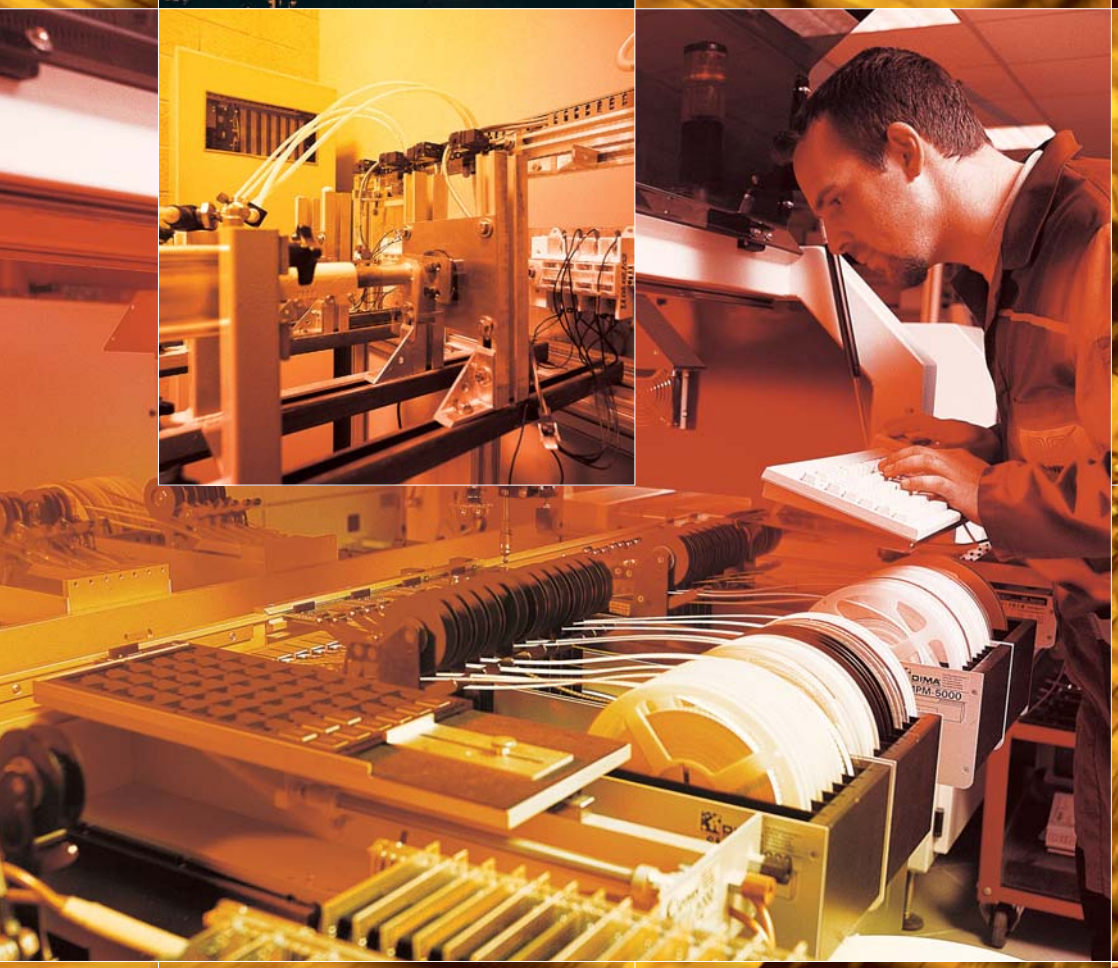
DIMA
IPM-5000

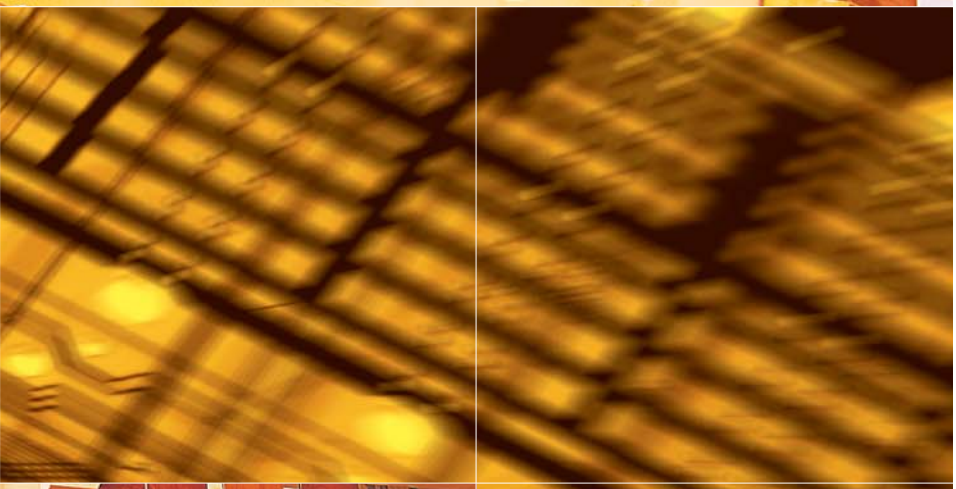

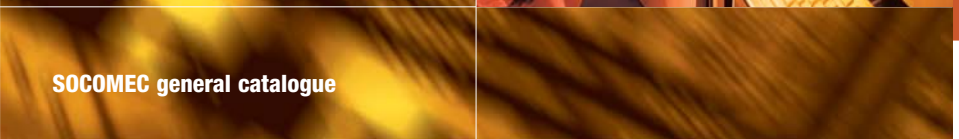

V=IR

GENERAL POINTS

L.V. distribution — D. 4
Communication networks — D. 12

WIRING SYSTEMS

Overload currents — D. 14
Short circuit currents — D. 20
Direct and indirect contacts — D. 27

DEVICES

Switching devices — D. 34
UL and NEMA specifications — D. 40
Fuses — D. 44
Energy management
DIRIS and COUNTIS — D. 55
Measuring — D. 59
Differential protection — D. 61
Insulation monitoring device — D. 66
Enclosures — D. 71
Busbars — D. 73

APPLICATION GUIDE

L.V. distribution

Earthing arrangements

An earthing, or "neutral load" arrangement on an LV network is defined by two letters:

The first defines the earth connection of the transformer's secondary (in most cases neutral)		The second defines the masses connection to earth.	
earthed	**T**	**T**	earthed
insulated from earth	**I**	**T**	earthed
earthed	**T**	**N**	connected to neutral

Earthing arrangements define the principles of distribution, and also ensure protection against indirect contact by automatically cutting off the power supply.

TT: "neutral to earth" load

Use of this type of load is generally stipulated by the electricity board.

Should there be an insulation fault, all or part of the operational equipment is cut off.

Cut off is obligatory at first fault.

The operational equipment must be fitted with instantaneous differential protection.

Differential protection can be general or subdivided according to the type and size of the installation.

This type of load can be found in the following contexts: domestic, minor tertiary, small workshops/processes, educational establishments with practical workshops, etc.

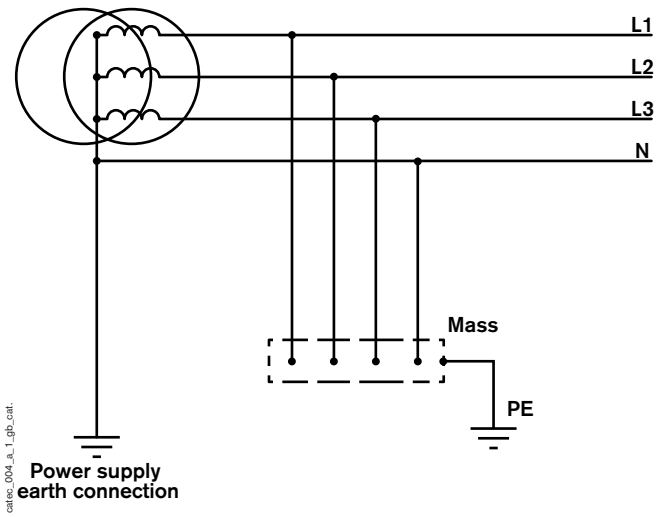

Fig. 1: TT arrangement

TN: "neutral connection" load

This distribution principle is suited to all networks which have a cut off system at first fault.

Installing and operating this type of network is economical but requires rigorous general circuit protection.

Neutral (N) and protective (PE) conductors can be common (TNC) or separated (TNS).

TNC arrangement

The protective and neutral conductor (PEN) must never be sectioned. Conductors must have a section over 10 mm² in copper and over 16 mm² in aluminium, and must not include mobile installations (flexible cables).

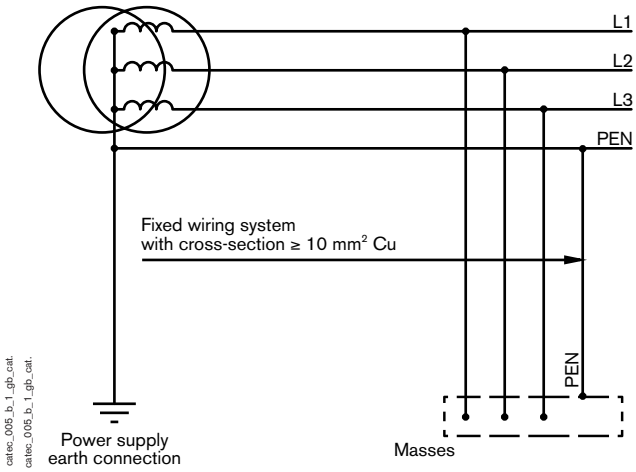

Fig. 2: TNC arrangement

Note: In order to avoid current circulating in the mass, the mass must be connected directly to the PEN terminal (and not the opposite). See fig. 3

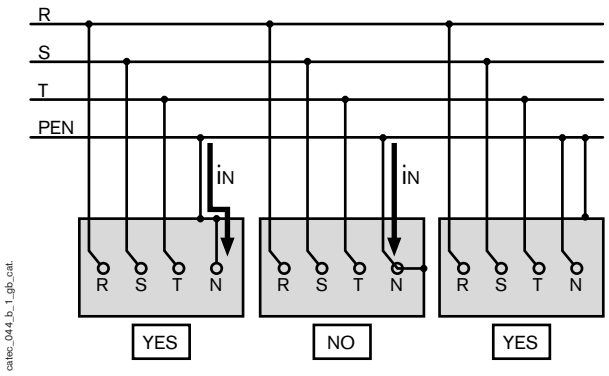

Fig. 3: correct connection of PEN

This document is not a contract. SOCOMEC reserves the right to modify features without prior notice in view of continued improvement. 2008 - 2009

Earthing arrangements (continued)

TN: "neutral connection" load (continued)

TNS arrangement

A TNS network can be set up upstream of a TNC network, where as the opposite is forbidden.

Neutral TNS conductors are generally sectioned, unprotected, and have the same sections as the corresponding phase conductors.

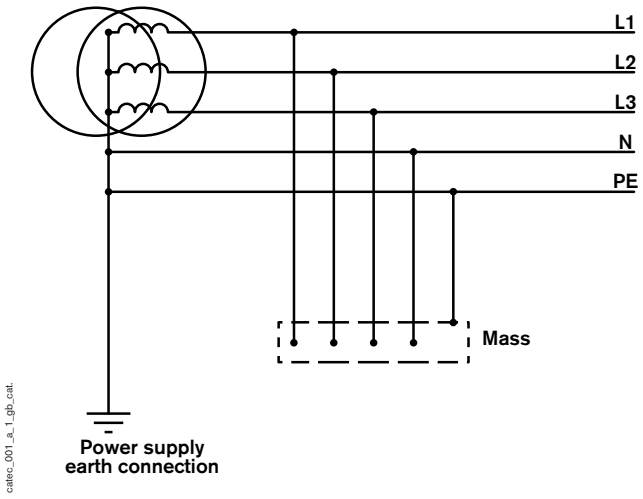

Fig. 1: TNS arrangement

IT: "insulated neutral" load

This neutral load is used when first fault cut off is detrimental to correct operation or personnel safety.

Implementing this type of installation is simple, but requires qualified personnel on-site to intervene quickly when a faulty insulation is detected.

An overvoltage limitor is compulsory to enable overvoltage caused by HV installations (such as HV/LV transformer breakdown, operations, lightning, etc.), to flow to earth.

Personnel safety is ensured by:

- interconnecting and earthing of masses,
- monitoring first fault by IMD (Insulation Monitoring Device),
- using second fault cut off by overcurrent protection devices, or by differential devices.

This system can be found, for example, in hospitals (operating theatres), or in safety circuits (lighting) and in industries where continuity of operations is essential or where the weak default current considerably reduces the risk of fire or explosion.

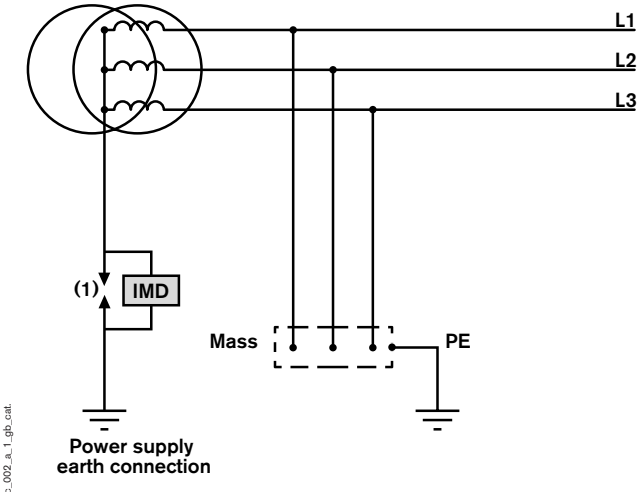

(1) Over voltage limitor

Fig. 2: IT arrangement without distributed neutral

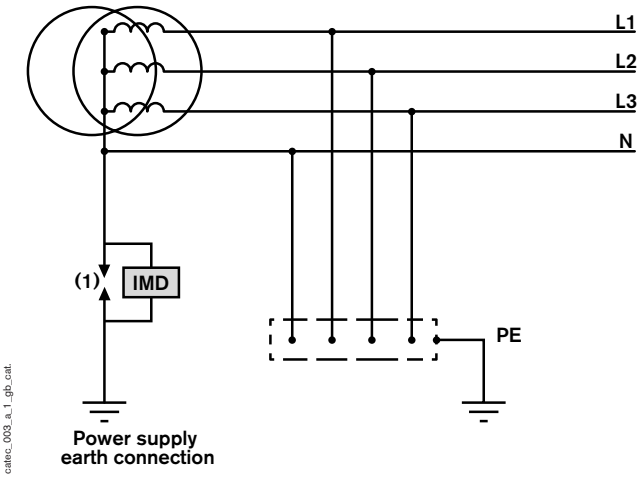

(1) Over voltage limitor

Fig. 3: IT arrangement with distributed neutral

This document is not a contract. SOCOMEC reserves the right to modify features without prior notice in view of continued improvement. 2008 - 2009

Voltages, overvoltages

Voltage range

In LV, two ranges can be identified according to IEC 364 standard.

RANGE	NOMINAL VOLTAGE U_n	
	AC	DC
ELV: Extra Low Voltage	≤ 50 V	≤ 120 V
LV: Low Voltage	50 V < U_n ≤ 1000 V	120 V < U_n ≤ 1500 V

Standard AC voltages

- Single phase: 230 V.
- Three phase: 230 V / 400 V and 400 V / 690 V.
- Present tolerance: +6% / -10%.

Voltage and tolerance development (IEC 60 038)

PERIOD	VOLTAGE	TOLERANCE
Before 1983	220 V / 380 V / 660 V	±10%
From 1983 to 2003	230 V / 400 V / 690 V	+6%/ -10%
After 2003	230 V / 400 V / 690 V	±10%

Ui insulation voltage

This describes the device's maximum operational voltage in normal network conditions

Example: on a 230 V / 400 V network, a device whose insulation voltage U_i ≥ 400 V must be chosen (see fig. 1).

On a 400 V / 690 V network, a device with insulation voltage U_i ≥ 690 V must be chosen.

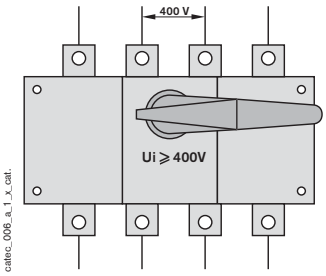

Fig. 1: on 230 V / 400 V networks, devices with insulation voltage ≥ 400 V must be chosen.

50 Hz dielectric quality

Dielectric quality is defined by the 50 Hz AC voltage which the device can withstand for 1 minute:
- between phases,
- between phase and earth,
- between open poles of the same phase.

This defines the device's withstand to network overvoltage. Overvoltage can result from transformer winding damage, for example, or from HV/LV terminals flashover due to an overvoltage on an HV network. Effective protection consists of connecting the transformer neutral point to earth, passing through an overvoltage limitor.

Dielectric tests

In order to define a device's dielectric insulation quality, IEC 947-3 standard stipulates the following measures:
- U_{imp} withstand on new devices before testing (short-circuits, endurance, etc.),
- verifying dielectric withstand following these tests with 2 x U_i voltage.

U_{imp} impulse withstand voltage

This defines the device's use in abnormal network conditions with overvoltage due to:
- lightning on overhead wires,
- device operating on HV circuits.

This characteristic also defines the device's dielectric quality.

Example U_{imp} = 8 kV (see table A).

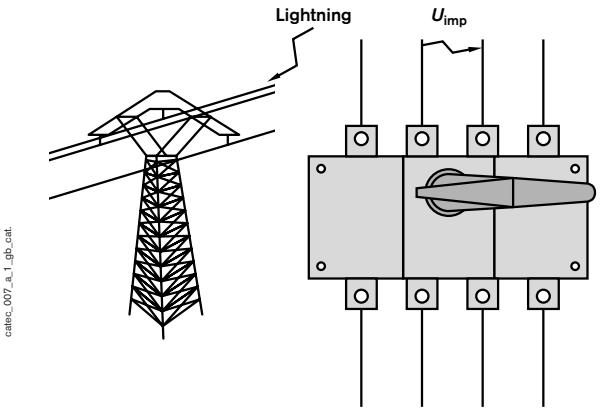

Fig. 2: device withstand to U_{imp}

Overvoltage protection

Overvoltage protection is achieved by choosing the equipment according to U_{imp}.
The NF C 15-100 and IEC 60364 standards stipulate 4 categories of use:
- I specially protected equipment: computers, electronics, etc.,
- II current-using devices: portable tools, motors, etc.,
- III equipment placed in distribution networks,
- IV equipment placed at the head of an installation.

Overvoltage in kV as per utilisation class.

Table A

THREE-PHASE NETWORK	SINGLE PHASE NETWORK	IV	III	II	I
230 V/400 V	230 V	6	4	2.5	1.5
400 V/690V		8	6	4	2.5

This document is not a contract. SOCOMEC reserves the right to modify features without prior notice in view of continued improvement. 2008 - 2009

Mains distortion

Voltage dip and cut-off

Definition
A voltage dip is a decrease of voltage amplitude for a period of time ranging from 10 ms to 1 s. The voltage variation is expressed in percentage of nominal current (between 10% and 100%). A 100% voltage dip is termed a cut-off.
Depending on cut-off time t, the following can be distinguished:
- 10 ml < t < 1 s: micro cut-offs due, for example, to fast reset at transient faults, etc.,
- 1 s < t < 1 mn: short cut-offs due to protection device operation, switching-in of high start-up current equipment, etc.,
- 1 mn < t: long cut-offs generally due to HV mains.

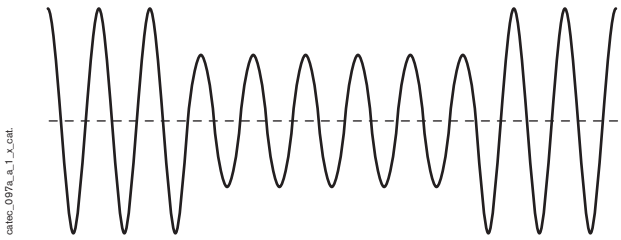

Fig. 1: voltage dip

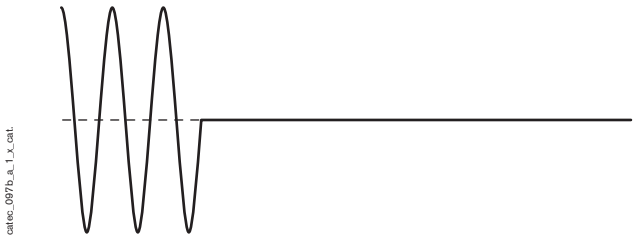

Fig. 2: cut-off

Consequences of voltage dips and cut-offs
- Opening of contactors (dip > 30%).
- Synchronous motor synchronism loss, asynchronous motor instability.
- Computer application: data loss, etc.
- Disturbance of lighting with gas discharge lamps (quenching when 50% dips for 50 ms, relighting only after a few minutes).

Solutions
- Whatever the type of load:
  - use of a UPS (Uninterruptible Power Supply),
  - modify mains structure (see page D.10).
- Depending on the type of load:
  - supply contactor coils between phases,
  - increase motor inertia,
  - use immediate-relighting lamps.

Frequency variation

This is generally due to generator set failure. Solution: use of static converter or UPS.

Flicker

Definition
Light flicker is due to sudden voltage variations, thus producing an unpleasant effect. Sudden voltage variations are due to devices whose consumed power varies quickly: arc furnaces, welding machines, rolling mills, etc.

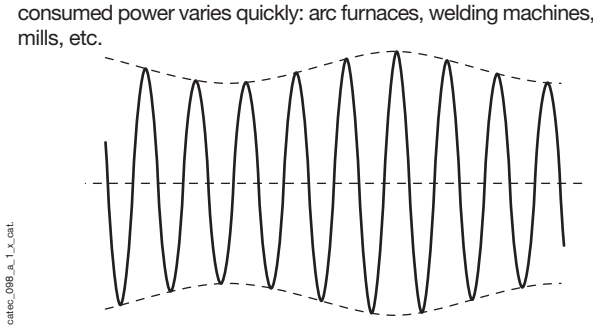

Fig. 3: flicker

Solutions
- UPS (for small loads).
- inductance or capacitor bank in the load circuit.
- connection to a specific HV/LV transformer (arc furnaces).

Transients

Definition
Transient phenomena are essentially fast, very high voltages (up to 20 kV), due to:
- lighting,
- operations or fault on HV mains,
- equipment electric arcs,
- inductive loads switching,
- highly capacitative circuits power on:
  - extended cable systems,
  - machines fitted with anti-stray capacitors.

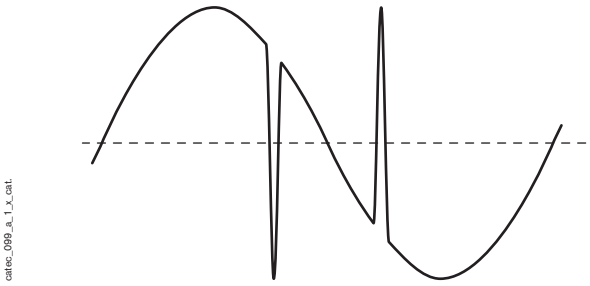

Fig. 4: transient

Transients cause:
- intemperate tripping of protection devices,
- electromagnetic interference,
- insufficiently protected material (electronic components, insulation rupture within motors, etc.).

Solutions
- Following standard IEC 664 for material construction: insulation co-ordination ensuring impulse wave withstand (see page D.6). All SOCOMEC material is manufactured according to this standard.
- Use of overvoltage limitors.
- Adequate earth connection of HV/LV sets.

This document is not a contract. SOCOMEC reserves the right to modify features without prior notice in view of continued improvement. 2008 - 2009

Mains distortion (continued)

Harmonics

Definition
Harmonic current or voltage are mains "stray" currents or voltages. They distort the current or voltage wave and lead to the following:
- an increase in current's rms value,
- a current passing the neutral being higher than the phase current,
- transformer saturation,
- disturbance in low current networks,
- intemperate tripping of protection devices, etc.,
- distorted measurements (current, voltage, power, etc.).

Harmonic currents can be caused by current transformers and electric arcs (arc furnaces, welding machines, fluorescent or gas-discharge lamps), but mainly by static rectifiers and converters (power electronics). Such charges are termed non-linear loads (see later).
Harmonic voltage is caused by harmonic current passing through mains and transformer impedance.

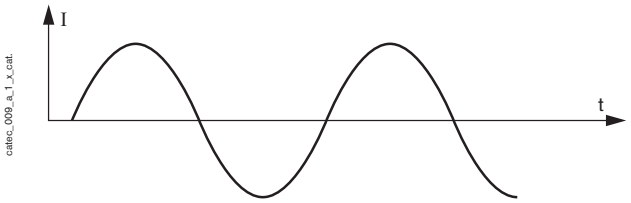

Fig. 1: pure sinusoidal wave current

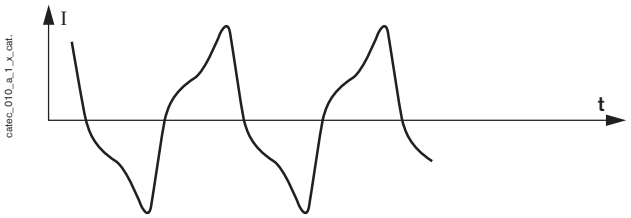

Fig. 2: current distorted by harmonics

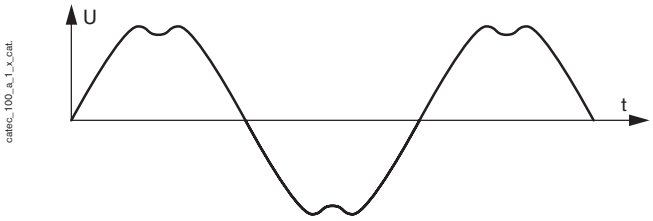

Fig. 3: voltage distorted by harmonics

Solutions
- Supply distorted loads with UPS.
- Use of anti-harmonic filters.
- Increase conductor cross-section.
- Device oversizing.

Linear and non-linear loads
A load is termed linear when current has the same wave-form as voltage:

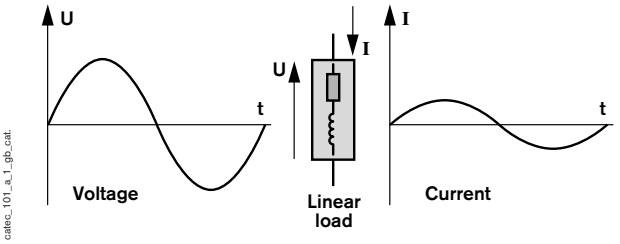

Fig. 4

A load is termed non-linear when the current wave-form no longer corresponds to voltage wave-form:

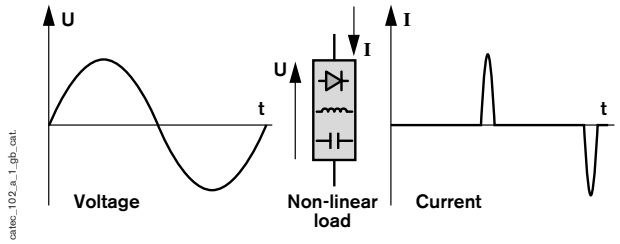

Fig. 5

Non-linear loads to neutral current values which may be much higher than phase current values.

Current peak factor (fp)
With non-linear loads, current distortion can be expressed by peak factor:

$$fp = \frac{Ipeak}{Irms}$$

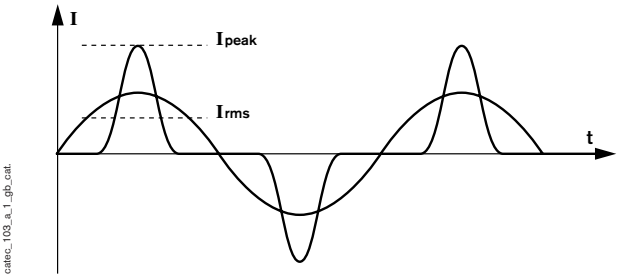

Fig. 6: peak factor: fp = Ipeak/Irms

Examples of fp values:
- resistive charge (pure sinusoidal wave): $\sqrt{2}$ = 1.414,
- mainframe computer: 2 to 2.5,
- PC work station: 2.5 to 3,
- printer: 2 to 3.

These few peak factor values show that the current wave can differ greatly from a pure sinusoid.

This document is not a contract. SOCOMEC reserves the right to modify features without prior notice in view of continued improvement. 2008 - 2009

Mains distortion (continued)

Harmonics

Harmonic number
Harmonic frequencies are multiples of mains frequency (50 Hz). This multiple is called the harmonic number.

Example:
The 5th harmonic current has a frequency of 5 x 50 Hz = 250 Hz.
The 1st harmonic current is called the "fundamental".

Mains harmonic currents
The current circulating in the network is the sum of pure sinusoidal current (called "fundamental") and a certain number of harmonic currents, depending on the load type.

Table A: mains harmonic currents

SOURCE	HARMONIC NO	2	3	4	5	6	7	8	9	10	11	12	13	14	15	16	17	18	19	20
Rectifier	1 half wave	•	•	•	•	•	•	•	•	•	•	•	•	•	•	•	•	•	•	•
	2 half waves		•		•		•		•		•		•		•		•		•	
	3 half waves	•		•	•		•	•		•	•		•	•		•	•		•	•
	6 half waves				•		•				•		•				•		•	
	12 half waves										•		•							
Gas discharge lamp			•		•		•		•		•		•		•		•		•	
Arc furnace			•		•		•		•		•		•		•		•		•	

Example: A gas discharge lamp only produces the 3rd, 5th, 7th, 9th, 11th, and 13th harmonic currents. Even-number harmonic currents (2, 4, 6 etc.) are absent.

Measuring device distortion
Ferromagnetic measuring devices (ammeters, voltmeters, etc.) are designed to measure sinusoidal parameters of a given frequency (generally 50 Hz).The same applies to digital devices other than sampling devices. These devices give false readings when the signal is subjected to harmonic distortion (see example below).
Only devices giving true rms values integrate signal distortions and hence give ream rms values.

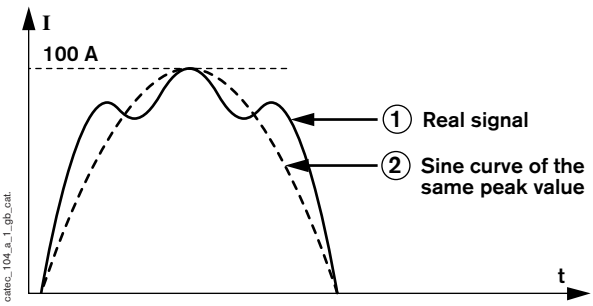

Fig. 1: measurement distortion

Example (fig. 1): signal 1 is distorted by the third harmonic. The rms value of a sine wave with the same peak value would be: $\frac{100\text{ A}}{\sqrt{2}} = 70\text{ A}$

The real rms value is 84 A (measured with the relevant device, see DIRIS page D.55).

Calculating rms current
In general, calculating rms current is only done for the first 10 to 20 significant harmonic currents.

Rms current per phase:

$$I_{rms} = \sqrt{I_n^2 + I_2^2 + I_3^2 + \ldots + I_k^2}$$

In: distorter's nominal current
I_2, I_3, etc.: 2nd, 3rd, etc. harmonic currents.

On the neutral: odd number harmonic currents, which are also multiples of 3 are added together:

$$I_{Neutral} = \sqrt{I_{N3}^2 + I_{N9}^2 + \ldots}$$

$I_{N3} = 3I_3$
$I_{N9} = 3I_9$
etc.

The rms values of harmonic currents I_2, I_3, etc. are difficult to establish. (Please consult us specifying load type, current peak factor, load power and network voltage).

Example:
Calculating phase and neutral current in a network supplied by a double half-wave rectifier.
- Current peak factor: 2.5
- Load 180 kVA → effective current 50 Hz

equivalent: $\frac{180\text{ kVA}}{\sqrt{3} \times 400\text{ V}} = 260\text{ A}$

- Calculated harmonics:
  $I_2 =$ 182 A 50 Hz
  $I_3 =$ 146 A 150 Hz
  $I_5 =$ 96 A 250 Hz
  $I_7 =$ 47 A 350 Hz
  $I_9 =$ 13 A 450 Hz
- High range harmonic currents are negligible.

Current in one phase:
$I_p = \sqrt{(182)^2 + (146)^2 + \ldots} = 260\text{ A}$

Current in the neutral:
$I_{Neutral} = \sqrt{(3 \times 146)^2 + (3 \times 13)^2} = 440\text{ A}$

The neutral current is higher than the phase current. Connecting sections, as well as equipment choice, must take this into account.

Distortion and harmonic rates
Overall harmonic rates or distortion rates:

$$T = \frac{\sqrt{I_2^2 + I_3^2 + \ldots I_k^2}}{I_{rms}}$$

To avoid problems with harmonics, this rate must be less than 5%.
n harmonic rate: n harmonic rms divided by fundamental rms. This must be less than 3%. This definition is also valid for voltage harmonics.

This document is not a contract. SOCOMEC reserves the right to modify features without prior notice in view of continued improvement. 2008 - 2009

Improving mains quality

Tolerances generally admissible for correct operation of a mains network having loads sensitive to distortion (electronic and computing equipment etc.), are given in the table below:

MAINS PARAMETERS	TOLERANCE
Steady-state voltage (constant load)	±2%
Dynamic-state voltage (variable load)	±10%
Frequency	±1%
Total harmonic rate	< 5%
Maximum harmonic rate	< 3%
Voltage unbalance (three-phase)	< 4%
Phase shift between phase to neutral voltages	120° ±3°
Micro-cut-off	< 10 ms

To achieve these values, substitute sources may be resorted to, and/or precautions taken at the level of installation.

Substitute sources

The different substitute sources are described in the table below:

SOURCE TYPE	ELIMINATED DISTORTION
Rotating set supplied by mains	• cut-off < 500 ms (according to flywheel) • voltage dip • frequency variations
UPS	Effective against all distortion, except long duration cut-offs > 15 mins. to 1 hour (according to installed power and UPS power)
Autonomous generator set	Effective in all cases, but with power supply interrupted during normal/emergency switching (< 2s with a motorised SIRCOVER)
UPS + rotating sets	This solution covers all distortion types

Installation precautions

Isolate distorting loads:

- with a separate mains, coming from a specific HV input (for high loads),
- by circuit subdivision: a circuit fault should affect other circuits as little as possible,
- by separating circuits consisting of distorting loads. These circuits are separated from other circuits at the highest possible level of the LV installation in order to benefit from disturbance reduction by cable impedance.

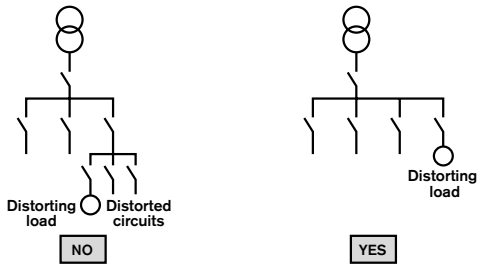

catec_106_a_1_gb_cat.

Fig. 1

Choose a suitable earthing system

The IT system guarantees continuous operation, by avoiding, for example, differential device circuit breaking by intemperate tripping following transient disturbance.

Ensure protective devices discrimination

Protective devices discrimination limits circuit fault breaking (see pages D.52 to D.54 and D.63).

Take care over using earth mains:

- by setting up earth mains suitable for certain applications (computing, etc.); each mains being chain-linked to obtain maximum equipotentiality (the lowest resistance between different points of the earth mains),
- by linking these mains in star form, as close as possible to the earthing rod,
- by using interconnected cable trays, chutes, tubes, and metallic gutters connected to earth at regular points,

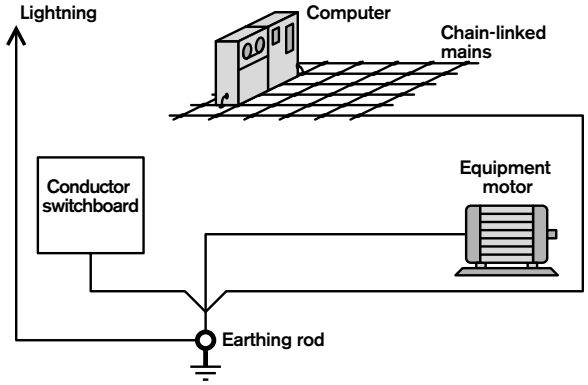

catec_107_a_1_gb_cat.

Fig. 2

- by separating distorting circuits from sensitive circuits laid out on the same cable trays,
- by using mechanical earths (cabinets, structures, etc.) as often as possible in order to achieve equipotential masses.

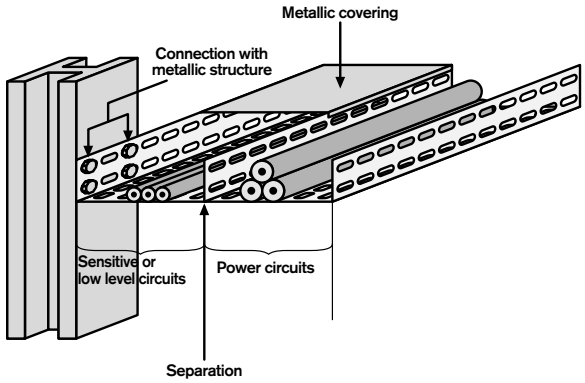

catec_108_a_1_gb_cat.

Fig. 3

This document is not a contract. SOCOMEC reserves the right to modify features without prior notice in view of continued improvement. 2008 - 2009

External influences

Degrees of protection (IP codes)

The degrees of protection are defined by 2 figures and possibly by an additional letter.

For example: IP 55 or IP xx B (x indicates: any value).

The figures and additional letters are defined below:

1st FIGURE PROTECTION AGAINST SOLID BODY PENETRATION			2nd FIGURE PROTECTION AGAINST LIQUID PENETRATION			ADDITIONAL LETTER(2)	DEGREE OF PROTECTION
IP	Tests		IP	Tests			BRIEF DESCRIPTION
0		No protection	0		No protection		
1	ø 5.25mm	Protected against solid bodies greater than 50 mm	1		Protected against water drops falling vertically (condensation)	A	Protected against access with back of hand
2(1)	ø 12.5 mm 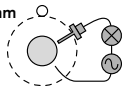	Protected against solid bodies greater than 12 mm	2		Protected against water drops falling up to 15° from the vertical	B	Protected against access with finger
3	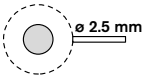 ø 2.5 mm	Protected against solid bodies greater than 2.5 mm	3		Protected against water showers up to 60° from the vertical	C	Protected against access with tool
4	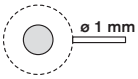 ø 1 mm	Protected against solid bodies greater than 1 mm	4	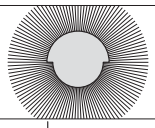	Protected against water splashes from any direction	D	Protected against access with wire
5	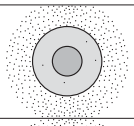	Protected against dust (excluding damaging deposits)	5	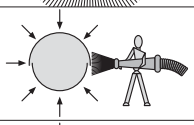	Protected against water jets from any hosed direction		
6	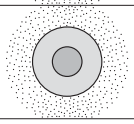	Total protection against dust	6	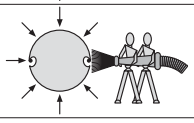	Protected against water splashes comparable to heavy seas		
The first two characterising figures are defined in the same way by NF EN 60 529, IEC 529 and DIN 40 050			7	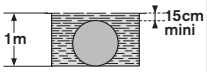	Protected against total immersion		

Note:
(1) Fig. 2 is established by 2 tests:
- non penetration of a sphere with the diameter of 12.5 mm,
- non accessibility of a test probe with a diameter of 12 mm.

(2) This additional letter only defines the access to dangerous components
Example: A device has an aperture allowing access with a finger. This will not be classified as IP 2x. However, if the components which are accessible with a finger are not dangerous (electric shock, burns, etc.), the device will be classified as xx B.

Protection levels against mechanical shock

A third figure may added to the IP code. This figure defines the protection index against mechanical shock. The third figure has been replaced by the IK index (EN 50102, NF C 20015).

IP/IK correspondence (subject to definitive standard)

Shock energy (J)	0	0.15	0.2	0.225	0.35	0.375	0.5	0.7	1	2	5	6	10	20
3rd IP figure	-	-	-	1	-	2	3	-	-	5	-	7	-	9
IK index	0	1	2		3		4	5	6	7	8		9	10
Classification AG (IEC 60 364)				AG1						AG2		AG3		AG4

This document is not a contract. SOCOMEC reserves the right to modify features without prior notice in view of continued improvement. 2008 - 2009

Communication networks

Digital communication

General points

A communication network interconnects a certain number of devices (electrical or computing), in order to exchange information: commands, measurements, etc.
Installing a communication network also enables the use of microprocessor technology which considerably improve dialogue between man and machine.

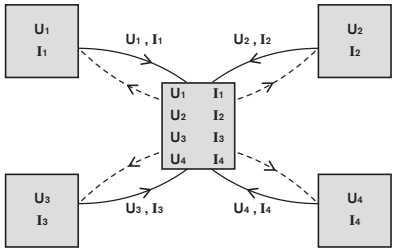

catec_091_a_1_x_cat.

Fig. 1

Transmission definitions

Analogue transmission
The transmitted signal is either a current or a voltage.
Example: 0-10 V or 4-20 mA connection.

Digital transmission
The signal is a 0 or 1 binary element called a bit. The information is encoded as a set of bits. Each type of numeric link defines an analog level (voltage level: see table A) with 0 and 1 logic at input and output.

Serial and parallel link
With a serial link, the set of bits comprising the information is transmitted on the same cable (in series) one after the other. This link requires two cables and an earth wire, or just two wires. With a parallel link, each bit is sent via a different wire. For an 8-bit encoding, a minimum of 8 wires plus one earth wire will therefore be necessary.

Sending/receiving
Transmission consists of sending and receiving. These can be:
- separated on two distinct channels (4-cable simplex link plus earth for an RS 485),
- together on one channel, sending and receiving performed alternatively in both directions (two-cable half duplex + earth),
- together on one channel, sending and receiving performed simultaneously (two-cable full duplex).

Bit rate
This is the number of bits a link is able to transmit in 1 second, characterised by a unit: the baud (Bd).
For numeric links which concern us 1 baud = 1 bit per second.

Channel
The simplest channel consists of two sheathed twisted cables (telephone pair), but coaxial cables, optic fibres or radio transmission are also possible. The channel depends on the chosen transmission type.

Range
The range is the maximum distance between an emitter and a receiver ensuring correct transmission of a signal.
Example: RS485 = 1500 m to 9600 baud.

Example

Transmitting information resulting from the measurement: U = 230 V

- **Solution 1:** by analog transmission.
  The value 230 V is equivalent to a current of 10 mA (for example).

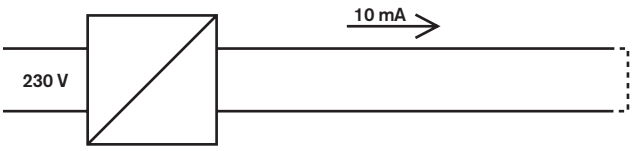

catec_215_a_1_x_cat.

- **Solution 2:** digital transmission.
  The value 230 V is encoded on a set of bits giving the message U = 230 V.
  In our example coding is done with 8 bits: 230 V = 00100110

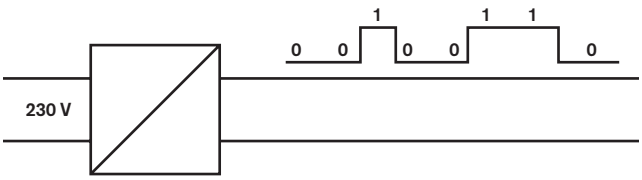

catec_216_a_1_x_cat.

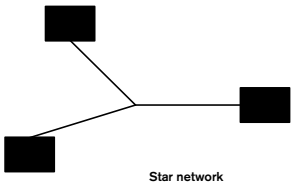

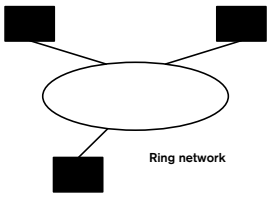

catec_092_a_1_gb_cat.

Fig 2 : network topology

Table A: comparison of RS232, RS485, RS422 links and current logo

BUS		CURRENT LOOP	RS232-C	RS422-A	RS485
Max. speed (bauds)		9.6 k	19.2 k	10 M	10 M
Number of transmitters		multipoint	1	1	1
Number of receivers		multipoint	1	10	31 receivers
Max. distance (m)		3000	15	1500 (1)	1500 (1)
Transmission voltage	0	from 0 to 4 mA	from +5 to +15 V	from +2 to +6 V	from +5 to +15 V
	1	20 mA	from -5 to -15 V	from -2 to -6 V	from -5 to -15 V
Receiving threshold	0	5 mA	> +3 V	> +0.2 V	> +0.2 V
	1	10 mA	< -3 V	< -0.2 V	< -0.2 V

(1) 1500 m a 9600 bauds.

This document is not a contract. SOCOMEC reserves the right to modify features without prior notice in view of continued improvement. 2008 - 2009

Communication networks (continued)

Protocols

Communication between several devices requires a common structure and language: this is known as the protocol.
Each type of link (JBUS/MODBUS, BATIBUS, EIBUS, etc.) has its own protocol defined by certain standards. However, all protocols are subdivided into 7 levels called layers. Each layer receives elementary information from the lower layer, processes it, and then supplies more elaborated information to the upper layer. DIRIS system uses layers 1, 2 and 7 only.

Layer 1: physical layer
The physical layer is the protocol's elementary layer. It defines the transmission mode, the medium (cable, etc.) and the network topology. Layer 1 (RS 232, RS 485) is defined by IUT Standards (International Union of Telecommunications).

Layer 2: link layer
This controls network access (e.g. master/slave system), the addressing control (emitter or receiver identity) and checking transmission errors.

Layer 3: networks

This layer is defined by the addressing, the path or the performances of the system.

Layer 4: transport
This layer provides point to point communication between the transmitter and the receiver and monitors its quality.

Layer 5: session
This controls flows and storage in the memory.

Layer 6: presentation
This layer provides the transcoding, the format, the conversion and the encoding.

Layer 7: application layer
The application layer consists of the highest information level and enables communication with the system user.

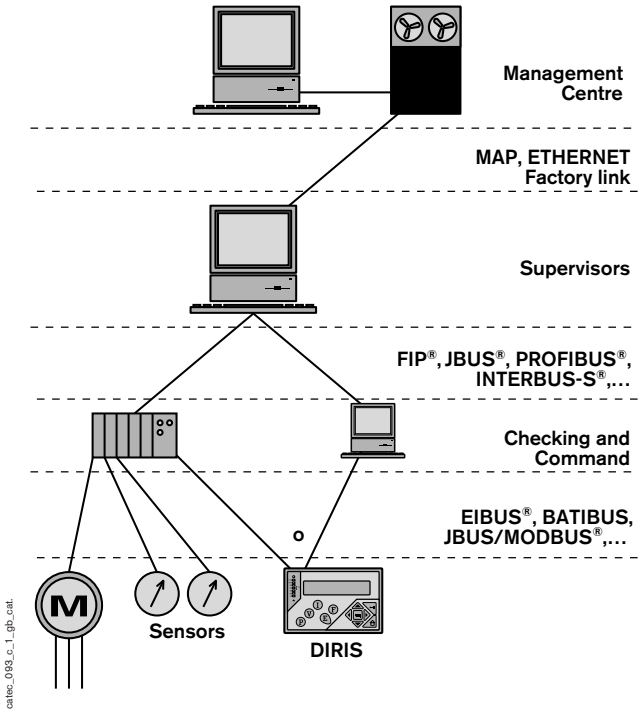

Fig. 1: example of industrial network

The protocol must be chosen according to the application. The distance between the master and the slaves, the number of products on the link and the current network are so many parameters which will be considered when making the choice. Today there are several possible solutions:

The standard solutions
- For not very complex transmissions between different input and output units, protocols like Can or ASI can be used (example: link between products in the same range).
- For transmissions between one or more actuators or sensors with PCs or PLCs, protocols such as INTERBUS-S®, PROFIBUS® or JBUS/MODBUS® can be used.
- For transmissions between PCs or between PCs and PLCs, industrialists are increasingly using the ETHERNET network with its TCP-IP protocol. In certain cases, by using specific interfaces, actuators are connected directly onto Ethernet from specific interfaces.

Specific solutions
There are also protocols that are specific to certain manufacturers. The latter generally propose gateways allowing the conversion of their protocol into a standard protocol of the JBUS/MODBUS® type, for example.

This document is not a contract. SOCOMEC reserves the right to modify features without prior notice in view of continued improvement. 2008 - 2009

Overload currents

Co-ordination between conductors and protective devices

Definition

Protective devices shall be provided to break any overload current flowing in the circuit conductors before such a current could cause a temperature rise detrimental to insulation, joints, terminations, or surroundings of the conductors (IEC 364).

To do this, the following currents are defined:

- **Ib**: current for which the circuit is designed,
- **Iz**: continuous current-carrying capacity of the cable,
- **In**: nominal current of the protective device,
- **I_2**: current ensuring effective operation of the protective device; in practice I_2 is taken as equal to:
  - the operating current in conventional time for circuit breakers
  - the fusing current in conventional time for type gG fuses.

Conductors are protected if these two conditions are met:

1: $\mathbf{Ib \leq I_n \leq Iz}$

2: $\mathbf{I2 \leq 1.45\ Iz}$

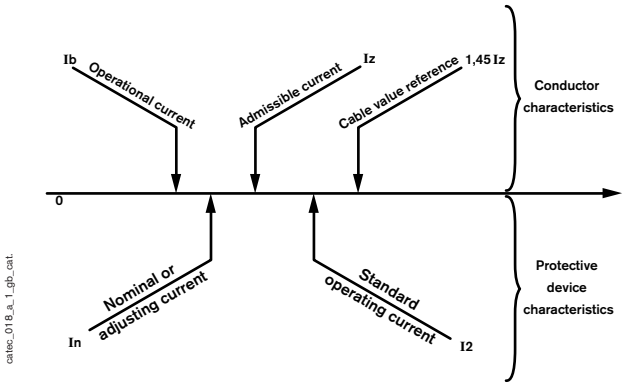

Fig. 1: co-ordination between conductors and protective devices

Example

Supplying a 150 kW load on a three-phase 400 V network.

Ib = 216 A current necessary for the load

In = 250 A gG fuse rating protecting the circuit

Iz = 298 A maximum admissible current for a 3 x 95 mm² cable complying with installation method, and the external conditions defined by the method presented in the pages to follow

I^2 = 400 A 250 A fuse melting current (1.6 x 250 A = 400 A)

1.45 Iz = 1.45 x 293 = 425 A

Conditions 1 and 2 have been satisfactorily met:

Ib = 216 A ≤ In = 250 A < Iz = 298 A

I^2 = 400 A ≤ 1.45Iz = 432 A.

Defining I_2 current

This is the current which ensures effective protective device operating:

PROTECTION TYPE	I_2 CURRENT
gG fuse (IEC 269-2-1)	
Rating ≤ 4 A	2.1 I_n
4 A < Rating < 16 A	1.9 I_n
Rating ≥ 16 A	**1.6 I_n**
Industrial circuit breaker	1.45 I_n
DIRIS CP or P/PS	1.15 I_0

This document is not a contract. SOCOMEC reserves the right to modify features without prior notice in view of continued improvement. 2008 - 2009

Defining Iz currents (according to IEC 364)

Continuous current - Carrying capacity of cables

Table A gives maximum Iz current value for each copper and aluminium cable section. These values must be corrected according to the following coefficients:
- Km: installation method coefficient (see page D.16),
- Kn: coefficient taking into account the number of cables laid together,
- Kt: coefficient taking into account ambient air temperature and cable type.

Coefficients Km, Kn, and Kt, are defined according to cable installation categories: B, C, E, or F (see pages D.16 and D.17).

The chosen section must be:

$$I_z \geq I'_z = \frac{I_b}{K_m \times K_n \times K_t}$$

Cables are classified in two families: PVC and PR (see table on p. D.22). The following figure gives the number of loaded cables. Cables insulated with elastomere (rubber, butyl, etc.) are classified in family PR.

Example: PVC 3 indicates a cable from the PVC category with 34 loaded conductors (3 phases or 3 phases + neutral).

Table A

Category				**Maximum I_z current in conductors (A)**					
B	PVC3	PVC2		PR3		PR2			
C		PVC3		PVC2	PR3		PR2		
E			PVC3		PVC2	PR3		PR2	
F				PVC3		PVC2	PR3		PR2
S in mm² copper									
1.5	15.5	17.5	18.5	19.5	22	23	24	26	
2.5	21	24	25	27	30	31	33	36	
4	28	32	34	36	40	42	45	49	
6	36	41	43	48	51	54	58	63	
10	50	57	60	63	70	75	80	86	
16	68	76	80	85	94	100	107	115	
25	89	96	101	112	119	127	138	149	161
35	110	119	126	138	147	158	169	185	200
50	134	144	153	168	179	192	207	225	242
70	171	184	196	213	229	246	268	289	310
95	207	223	238	258	278	298	328	352	377
120	239	259	276	299	322	346	382	410	437
150		299	319	344	371	395	441	473	504
185		341	364	392	424	450	506	542	575
240		403	430	461	500	538	599	641	679
300		464	497	530	576	621	693	741	783
400					656	754	825		940
500					749	868	946		1083
630					855	1005	1088		1254
S in mm² aluminium									
2.5	16.5	18.5	19.5	21	23	24	26	28	
4	22	25	26	28	31	32	35	38	
6	28	32	33	36	39	42	45	49	
10	39	44	46	49	54	58	62	67	
16	53	59	61	66	73	77	84	91	
25	70	73	78	83	90	97	101	108	121
35	86	90	96	103	112	120	126	135	150
50	104	110	117	125	136	146	154	164	184
70	133	140	150	160	174	187	198	211	237
95	161	170	183	195	211	227	241	257	289
120	188	197	212	226	245	263	280	300	337
150		227	245	261	283	304	324	346	389
185		259	280	298	323	347	371	397	447
240		305	330	352	382	409	439	470	530
300		351	381	406	440	471	508	543	613
400					526	600	663		740
500					610	694	770		856
630					711	808	899		996

This document is not a contract. SOCOMEC reserves the right to modify features without prior notice in view of continued improvement. 2008 - 2009

Overload currents

Defining Iz currents (continued)

Km coefficient

According to IEC 364 standard: (Table A)

CAT	METHOD OF INSTALLATION	Km			
		(a)	(b)	(c)	(d)
B	1 In thermally insulating wall	0.77	-	0.70	0.77
	2 Visible assembly, embedded in wall or raised section	1	-	0.9	-
	3 In building construction cavities/spaces or false ceilings	0.95	-	0.865	0.95
	4 In cable troughs	0.95	0.95	-	0.95
	5 In chutes, mouldings, skirting or baseboards	-	1	-	0.9
C	1 mono or multi-conductor cables embedded directly in a wall without mechanical protection	-	-	-	1
	2 • Wall-fixed cables • Ceiling-fixed cables	-	-	1	0.95
	3 Open-mounted or insulated conductors	-	1.21	-	-
	4 Cables mounted on non-perforated cable trays	-	-	-	1
E F	Multi or monoconductor cables on { 1 - perforated cable trays 2 - brackets, ladders 3 - Wall-jutting clamps 4 - Suspended cables on suspension cable	-	-	-	1

(a) insulated conductor placed in a conduit (b) Insulated conductor not placed in a conduit (c) Cable placed in a conduit
(d) Cable not placed in a conduit

Kn coefficient

According to IEC 364 standard:

Table A

CATEGORY	JOINED CABLE LAYOUT	Kn CORRECTIVE FACTORS N° OF CIRCUITS OR MULTICONDUCTOR CABLES											
		1	2	3	4	5	6	7	8	9	12	16	20
B, C	Embedded or sunk in to walls	1.00	0.80	0.70	0.65	0.60	0.55	0.55	0.50	0.50	0.45	0.40	0.40
C	Single layer on walls or flooring or non perforated racks	1.00	0.85	0.79	0.75	0.73	0.72	0.72	0.71	0.70	No additional reduction factor for more than 9 cables		
	Single layer onto ceiling	0.95	0.81	0.72	0.68	0.66	0.64	0.63	0.62	0.61			
E, F	Single layer on horizontal perforated racks or vertical racks	1.00	0.88	0.82	0.77	0.75	0.73	0.73	0.72	0.72			
	Single layer on cable ladders, brackets, etc	1.00	0.88	0.82	0.80	0.80	0.79	0.79	0.78	0.78			

When cables are laid out in several layers the Kn value must be multiplied by:
Table B

N° of layer	2	3	4 and 5	6 to 8	9 or more
Coefficient	0.80	0.73	0.70	0.68	0.66

Example

catec_046_a_1_x.cat

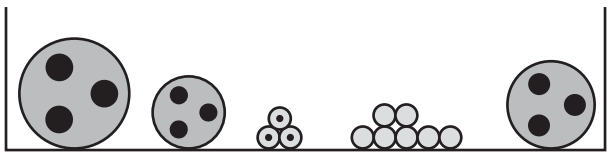

The following are laid out on a perforated rack:
- 2 three-pole cables (2 circuits a and b),
- 1 single-pole three-cable set (1 circuit, c),
- 1 set made up of 2 conductors per phase (2 circuits, d),
- 1 three-pole cable for which Kn must be defined (1 circuit, e).

The total number of circuits is 6. The reference method is method E (perforated rack). Kn = 0.57.

This document is not a contract. SOCOMEC reserves the right to modify features without prior notice in view of continued improvement. 2008 - 2009

Defining Iz currents (continued)

Method of installation

• B - 1 category

Insulated conductors in embedded conduits within thermally insulating walls.

Multiconductor cables in embedded conduits within thermally insulating walls.

Insulated conductors in visibly-assembled conduits.

Mono or multi-conductor cables in visibly-assembled conduits

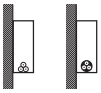
Insulated conductors in visibly-assembled raised-section conduits.
Mono or multi-conductor cables in visibly-assembled raised-section conduits.

Insulated conductors in conduits embedded in walls.

Mono or multi-conductor cables in conduits embedded in walls.

• B - 2 category

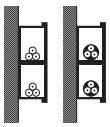
Insulated conductors or mono or multi-conductor cables in wall-fixed chutes:

- horizontal path

- vertical path

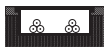
Insulated conductors in chutes embedded in floors.

Mono or multi-conductor cables in chutes embedded in floors

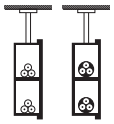
Insulated conductors in suspended chutes

Mono or multi-conductor cables in suspended chutes.

• B - 3 category

Mono or multi-conductors in building construction cavities.

Insulated conductor in building construction cavities.

Mono or multi-conductor cables in section conduits in building construction cavities.

Insulated conductors in section conduits in building construction cavities.

Mono or multi-conductor cables in section conduits building construction cavities.

Insulated conductors in section conduits embedded in construction.

Mono or multi-conductor cables in section conduits embedded in construction. Mono or multi-conductor cables:

- in false ceilings,
- in suspended ceilings.

• B - 4 category

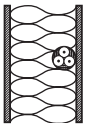
Multi-conductor cables directly embedded in thermally insulating walls.

Insulated conductors in conduits or multi-conductor cables in closed cable troughs, vertical or horizontal path.

Insulated conductors in conduits in ventilated cable troughs.

Mono or multi-conductor cables in open or ventilated cables troughs.

• B - 5 category

Insulated conductors in mouldings.

Insulated conductors or mono or multi-conductors in grooved skirting or base-boards.

Insulated conductors in conduits or mono or multi-conductor cables in jamb linings.

Insulated conductors in conduits or mono or multi-conductor cables in window frames.

• C - 1 category

Mono or multi-conductor cables directly embedded in walls, without any extra mechanic protection.

Mono or multi-conductor cables directly embedded in walls with an extra mechanic protection.

• C - 2 category

Mono or multi-conductor cables with or without sheathing.
- wall-fixed cables,
- ceiling-fixed cables.

• C - 3 category

Open-mounted or insulated on insulator conductors.

• C - 4 category

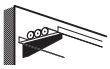
Mono or multi-conductor cables on non-perforated cable trays or racks.

• E - 1(1) and F - 1(2) categories

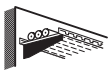
On perforated cable trays or racks, horizontal or vertical path.

• E - 2(1) and F - 2(2) categories

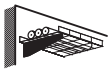
- on brackets,

- on cable ladders.

• E - 3(1) and F - 3(2) categories

Wall-jutting clamp-fixed.

• E - 4(1) and F - 4(2) categories

Mono or multi-conductor cables suspended on suspension or self-supporting cable.

(1) multi-conductor cables
(2) mono-conductor cables

Kf coefficient

According to IEC 364 standard:

Table C

AMBIENT TEMPERATURE (°C)	INSULATION		
	ELASTOMER (RUBBER)	PVC	PR/EPR
10	1.29	1.22	1.15
15	1.22	1.17	1.12
20	1.15	1.12	1.08
25	1.07	1.06	1.04
35	0.93	0.94	0.96
40	0.82	0.87	0.91
45	0.71	0.79	0.87

AMBIENT TEMPERATURE (°C)	INSULATION		
	ELASTOMER (RUBBER)	PVC	PR/EPR
50	0.58	0.71	0.82
55	-	0.61	0.76
60	-	0.50	0.71
65	-	-	0.65
70	-	-	0.58

Example: For an insulated PVC cable where the ambient temperature reaches 40 °C, then Kt = 0.87.

This document is not a contract. SOCOMEC reserves the right to modify features without prior notice in view of continued improvement. 2008 - 2009

Overload currents

Defining Iz current (continued)

Cable identification

Table A:
Equivalence between the old and the new name (cables)

OLD NAME (NATIONAL STANDARD) (NATIONAL STANDARD)	NEW NAME (HARMONISED STANDARD)
U 500 VGV	A 05VV - U (o R)
U 1000 SC 12 N	H 07 RN - F
U 500 SV 0V	A 05 VV - F
U 500 SV 1V	

Table B: cable classification

PR CABLES		PVC CABLES	
U 1000	R 12 N	FR-N 05	W-U, R
U 1000	R2V	FR-N 05	W-AR
U 1000	RVFV	FR-N 05	VL2V-U, R
U 1000	RGPFV	FR-N 05	VL2V-AR
H 07	RN-F	H 07	VVH2-F
FR-N 07	RN-F	H 07	VVD3H2-F
A 07	RN-F	H 05	VV-F
FR-N 1	X1X2	H 05	VVH2-F
FR-N 1	X1G1	FR-N 05	VV5-F
FR-N 1	X1X2Z4X2	FR-N 05	VVC4V5-F
FR-N 1	X1G1Z4G1	A 05	VV-F
FR-N 07	X4X5-F	A 05	VVH2-F
0.6/1	twisted		
FR-N 1	XDV-AR, AS, AU		
H 05	RN-F		
A 05	RN-F		
H 05	RR-F		
A 05	RR-F		

Examples

Example 1

A three-phase load with neutral and 80 A nominal current, is to be supplied (therefore Ib = 80 A). Cable type U 1000 R2V is used on a perforated rack with three other circuits at an ambient temperature of 40 °C. Which section should be chosen?

Iz must be:

$$Iz > I'z = \frac{Ib}{Km \times Kn \times Kt}$$

- Defining I'z
  - method of installation: "E", therefore Km = 1 (see table A p. D.17)
  - total number of circuits: 4, therefore Kn = 0.77 (see table A p. D.16)
  - ambient air temperature: 40 °C, therefore Kt = 0.91 (see table C p. D.17).

$$\text{Therefore } I'z = \frac{80\ A}{1 \times 0.77 \times 0.91} = 114\ A$$

- Defining I'z
  Cable U 1000 R2V has a PR classification (see table B). The number of charged conductors is 3. Turn to table A on page D.55 and find column PR3 corresponding to category E. The Iz value immediately higher than I'z must be chosen, therefore Iz = 127 A, this corresponding to a 3 x 25 mm² copper cable, protected by a 100 A gG fuse, or a 3 x 35 mm² aluminium cable, protected by a 100 A gG fuse.

Example 2

The I_o adjusting current for a DIRIS CP protecting a 3-phase + neutral circuit is defined in the following conditions:
- single conductor copper cables, with PR insulation, laid on brackets
- ambient air temperature: 40 °C
- no other circuits in close proximity
- Ib = 450 A

- Defining I'z
  - method of installation: "F", therefore Km = 1 (see table A p. D.16)
  - total number of circuits: 1, therefore Kn = 1 (see table A p. D. 16)
  - ambient air temperature: 40 °C, therefore Kt = 0.91 (see table C p. D.17).

$$\text{Therefore } I'z = \frac{450\ A}{1 \times 1 \times 0.91} = 494\ A$$

- Defining Iz and I_o
  - Iz value immediately higher than I'z: 506 A
  - chosen section: 185 mm².

This document is not a contract. SOCOMEC reserves the right to modify features without prior notice in view of continued improvement. 2008 - 2009

Fuse protection of wiring systems against overloads

Column Iz gives the maximum admissible current for each copper and aluminium cable cross section according to standard IEC 60 364 and the guide UTE 15-105.

Column F gives the rating of the gG fuse associated with this cross section and type of cable.

Categories B, C, E and F correspond to the different methods of cable installation (see page D.18).

Cables are classified in two families: PVC and PR (see table p. D.18). The figure that follows gives the number of loaded conductors (PVC 3 indicates a cable from the PVC family with 3 loaded conductors: 3 phases or 3 phases + neutral).

Example

A PR3 25 mm2 copper cable installed in category E is limited to 127 A and protected by a 100 A gG fuse.

CATEGORY	ADMISSIBLE CURRENT(Iz) ASSOCIATED PROTECTIVE FUSE (F)																	
B	PVC3		PVC2				PR3				PR2							
C			PVC3				PVC2		PR3				PR2					
E					PVC3				PVC2		PR3				PR2			
F							PVC3				PVC2		PR3				PR2	
S mm²																		
COPPER	Iz	F	Iz	F	Iz	F	Iz	F	Iz	F	Iz	F	Iz	F	Iz	F	Iz	F
1.5	15.5	10	17.5	10	18.5	16	19.5	16	22	16	23	20	24	20	26	20		
2.5	21	16	24	20	25	20	27	20	30	25	31	25	33	25	36	32		
4	28	25	32	25	34	25	36	32	40	32	42	32	45	40	49	40		
6	36	32	41	32	43	40	46	40	51	40	54	50	58	50	63	50		
10	50	40	57	50	60	50	63	50	70	63	75	63	80	63	86	63		
16	68	50	76	63	80	63	85	63	94	80	100	80	107	80	115	100		
25	89	80	96	80	101	80	112	100	119	100	127	100	138	125	149	125	161	125
35	110	100	119	100	126	100	138	125	147	125	158	125	171	125	185	160	200	160
50	134	100	144	125	153	125	168	125	179	160	192	160	207	160	225	200	242	200
70	171	125	184	160	196	160	213	160	229	200	246	200	269	160	289	250	310	250
95	207	160	223	200	238	200	258	200	278	250	298	250	328	250	352	315	377	315
120	239	200	259	200	276	250	299	250	322	250	346	315	382	315	410	315	437	400
150			299	250	319	250	344	315	371	315	399	315	441	400	473	400	504	400
185			341	250	364	315	392	315	424	315	456	400	506	400	542	500	575	500
240			403	315	430	315	461	400	500	400	538	400	599	500	641	500	679	500
300			464	400	497	400	530	400	576	500	621	500	693	630	741	630	783	630
400									656	500	754	630	825	630			840	800
500									749	630	868	800	946	800			1083	1000
630									855	630	1005	800	1088	800			1254	1000
ALUMINIUM																		
2.5	16.5	10	18.5	10	19.5	16	21	16	23	20	24	20	26	20	28	25		
4	22	16	25	20	26	20	28	25	31	25	32	25	35	32	38	32		
6	28	20	32	25	33	25	36	32	39	32	42	32	45	40	49	40		
10	39	32	44	40	46	40	49	40	54	50	58	50	62	50	67	50		
16	53	40	59	50	61	50	66	50	73	63	77	63	84	63	91	80		
25	70	63	73	63	78	63	83	63	90	80	97	80	101	80	108	100	121	100
35	86	80	90	80	96	80	103	80	112	100	120	100	126	100	135	125	150	125
50	104	80	110	100	117	100	125	100	136	125	146	125	154	125	164	125	184	160
70	133	100	140	125	150	125	160	125	174	160	187	160	198	160	211	160	237	200
95	161	125	170	125	183	160	195	160	211	160	227	200	241	200	257	200	289	250
120	188	160	197	160	212	160	226	200	245	200	263	250	280	250	300	250	337	250
150			227	200	245	200	261	200	283	250	304	250	324	250	346	315	389	315
185			259	200	280	250	298	250	323	250	347	315	371	315	397	315	447	400
240			305	250	330	250	352	315	382	315	409	315	439	400	470	400	530	400
300			351	315	381	315	406	315	440	400	471	400	508	400	543	500	613	500
400									526	400	600	500	663	500			740	630
500									610	500	694	630	770	630			856	630
630									711	630	808	630	899	800			996	800

This document is not a contract. SOCOMEC reserves the right to modify features without prior notice in view of continued improvement. 2008 - 2009

Short circuit currents

Definition

A short circuit current is a current triggered by a negligible impedance fault between points of an installation normally having a potential difference.

3 levels of short circuit currents can be identified:

- peak short circuit current (I_{sc} peak) corresponds to the top of the current wave, generating heightened electrodynamic forces, notably at the level of busbars and contacts or equipment connections,
- rms short circuit current (I_{sc} rms): rms value of the fault current which leads to equipment and conductor overheating, and may raise the potential difference of the electrical earth to a dangerous level,
- minimum short circuit current (I_{sc} min): rms value of the fault current establishing itself in high impedance circuits (reduced section conductor and long conductors, etc.). It is necessary to quickly eliminate this type of fault, known as impedant, by appropriate means.

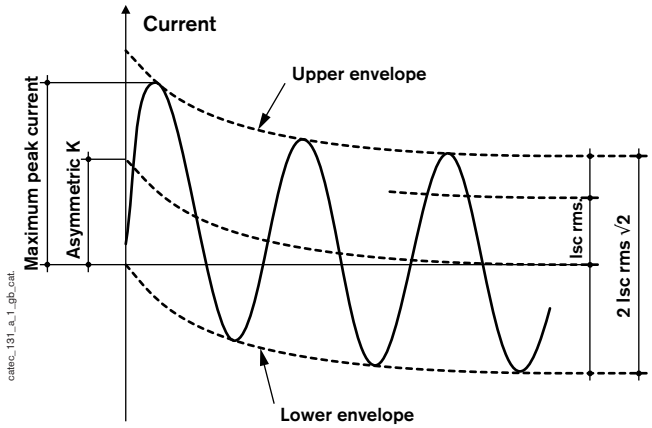

Calculating a source's I_{sc}

With one transformer

- Simplified calculation according to transformer power

Mains supply	I_n	I_{sc} rms
127/220 V	**S** (kVA) x **2.5**	I_n x **20**
220/380 V	**S** (kVA) x **1.5**	I_n x **20**

- Simplified calculation according to transformer short-circuit voltage (u):

$$I_{sc}\ (\text{A rms}) = \frac{S}{U\sqrt{3}} \times \frac{100}{u} \times k$$

S: power (VA)
U: phase to phase voltage (V)
u: short circuit voltage (%)
k: coefficient allowing for upstream impedance (for example, 0.8).

With "n" transformers in parallel

"n" being the number of transformers

- T1; T2; T3 identical.
- Short circuit in A, B or C device 1, 2 or 3 must withstand $I_{scA} = (n-1) \times I_{sc}$ of a transformer.
- Short circuit in D, device 4 must withstand: $I_{scB} = n \times I_{sc}$ of a transformer.

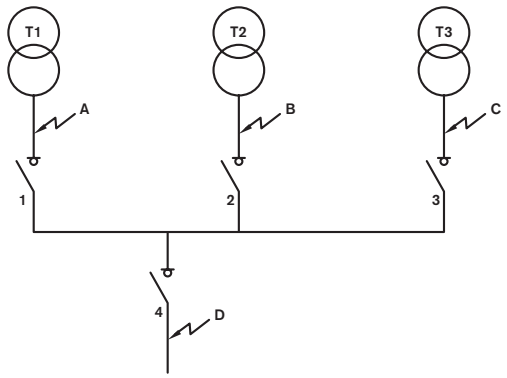

Fig. 1: short circuit with several transformers in parallel

Batteries I_{sc}

I_{sc} values downstream of an accumulator bank are approximately:

$I_{sc} = 15 \times Q$ (open lead acid)
$I_{sc} = 40 \times Q$ (air-tight lead acid)
$I_{sc} = 20 \times Q$ (Ni-Cd)
Q (Ah): capacity in Amps - hour

Generator sets I_{sc}

An alternator's internal impedance depends on its manufacture. This can be characterised as values expressed in%:

- X'd transient reactance:
  - 15 to 20% for a turbo-generator,
  - 25 to 35% for salient polar alternator (subtransient reactance is negligible).
- X'o homopolar reactance: this can be estimated at 6% in the absence of more precise indications.

The following may be calculated:

$$I_{sc3} = \frac{k_3 \times P}{U_0 \times X'd}$$

$$I_{sc2} = 0.86 \times I_{sc3}$$

$$I_{sc1} = \frac{k_1\ P}{U_0\ (2X'd + X'0)}$$

P: alternator power in kVA
U_o: phase to neutral voltage
X'd: transient reactance
$k_3 = 0.37$ for I_{sc3} max
$k_3 = 0.33$ for I_{sc3} min

X'$_o$: homopolar reactance
$k_1 = 1.1$ per I_{sc1} max
$k_1 = 1.1$ per I_{sc1} min

Example: P = 400 kVA X'd = 30% X'0 = 6% U_0 = 230 V

$$I_{sc3}\ \text{max} = \frac{0.37 \times 400}{230 \times \frac{30}{100}} = 2.14\ \text{kA} \quad I_{sc1}\ \text{max} = \frac{1.1 \times 400}{230 \times \left[2 \times \frac{30}{100} + \frac{6}{100}\right]} = 2.944\ \text{kA}$$

I_{sc2} max = 1.844 kA

Weak short circuit currents generated by generator sets make it difficult to protect circuits by usual means. SOCOMEC offers the DIRIS system as a suitable solution.

This document is not a contract. SOCOMEC reserves the right to modify features without prior notice in view of continued improvement. 2008 - 2009

Calculating a LV installation's I_{sc}

General points

Calculating short-circuit currents enables the following to be defined:
- the protection device's breaking capacity,
- the cross-section of conductors enabling:
  - to withstand short circuit temperature stress,
  - to guarantee protection device opening against indirect contact within the time stipulated by IEC 364 standard.
- the mechanical withstand of conductor supports (electrodynamic stress).

The protection device's breaking capacity is established from the I_{sc} calculated at its terminals.

The conductor section depends on the minimum I_{sc} calculated at receptor terminals.

The conductor support mechanical withstand is established by calculating I_{sc} peak deducted from maximum I_{sc}.

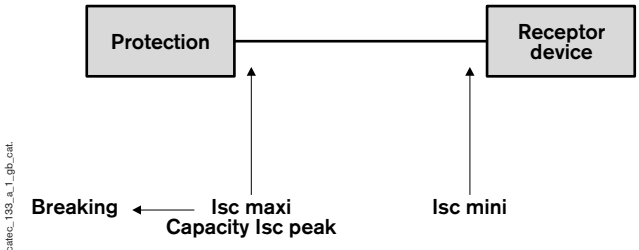

catec_133_a_1_gb_cat.

Calculating short-circuit current can be performed by one of the three following methods:

- **Conventional method**
  This enables minimum I_{sc} to be calculated. See below.
- **Impedance method**
  This method consists of calculating the default loop's impedance Z, taking the power source into account (mains, battery bank, generator sets, etc.). This is an accurate method which enables minimum and maximum I_{sc} to be calculated, but also requires that circuit fault parameters should be known (see page D.23).
- **Quick method**
  This method is used when circuit fault parameters are known. Short-circuit current I_{sc} is defined on one point of the network where upstream I_{sc} as well as length and connecting section to upstream point is known (see page D.24). This method only gives the maximum I_{sc} value.

Conventional method

This method gives the minimum I_{sc} value at the end of the installation not supplied by an alternator:

$$I_{sc} = A \times \frac{0.8\,U \times S}{2\,\rho\,L}$$

U: voltage between phases in V
L: wiring system length in m
S: conductor section in mm²
ρ = 0,028 mΩ.m for copper with fuse protection
0.044 mΩ.m for aluminium with fuse protection
0.023 mΩ.m for copper with protection by circuit breaker
0.037 mΩ.m for aluminium with protection by circuit breaker
A = 1 for circuits with neutral (neutral section = phase section)
1.73 for circuits without neutral
0.67 for circuits with neutral (neutral section = $\frac{1}{2}$ phase section)

For cable sections of 150 mm² and over, account must be taken of the reactance by dividing the Isc value by:
- 150 mm² cable: 1.15
- 185 mm² cable: 1.2
- 240 mm² cable: 1.25
- 300 mm² cable: 1.3

Impedance method

This method consists of adding all the circuit's resistance R and reactance X upstream of the short-circuit (see next page) and then calculating impedance Z.

$$Z_{(m\Omega)} = \sqrt{R^2_{(m\Omega)} + X^2_{(m\Omega)}}$$

This method enables the following to be calculated:
- I_{sc3}: three phase short-circuit current

$$I_{sc3} = 1.1 \times \frac{U_0}{Z_3}$$

U_0: phase to neutral voltage (230 V on a 230/400 network)
Z_3: three phase loop impedance (see page D.23)

- I_{sc2}: short-circuit current between two phases

$$I_{sc2} = 0.86 \times I_{sc3}$$

- I_{sc1}: single phase short-circuit current

$$I_{sc1} = 1.1 \times \frac{U_0}{Z_1}$$

U_0: phase to neutral voltage (230 V on a 230/400 network)
Z_1: single phase loop impedance (see page D.23)

- I_{sc} peak
  I_{sc} peak must be calculated when it is necessary to know electrodynamic stress (on busbar supports for example):

$$I_{sc}\ \text{cresta}_{(kA)} = I_{sc}\ \text{rms}_{(kA)} \times \sqrt{2} \times k$$

k: asymmetric coefficient given below.

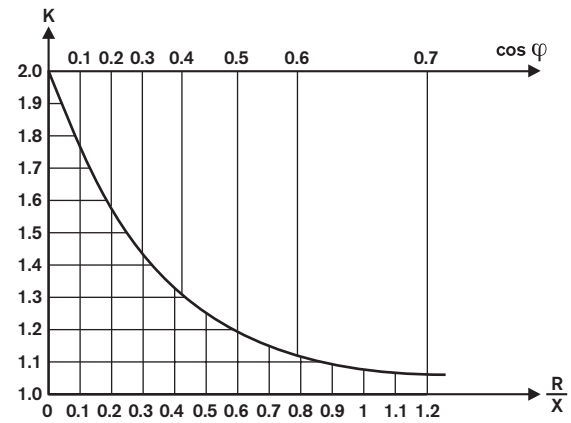

catec_134_a_1_gb_cat.

Fig. 1

Note: Value R/X is more often used, as this is more exploitable in this diagram.
k = 1 for symmetric short circuit current (cos. φ = 1).

This document is not a contract. SOCOMEC reserves the right to modify features without prior notice in view of continued improvement. 2008 - 2009

Short circuit currents

Calculating a LV installation's I_{sc}

Impedance method (continued)

Defining "R" and "X" (network) values **R = Resistance** **X = Reactance**

- The table below gives R and X values for different parts of the circuit up to the short-circuit point.

To calculate the default loop impedance, R and X values must be added separately (see example on page D.23).

Diagram	R and X values

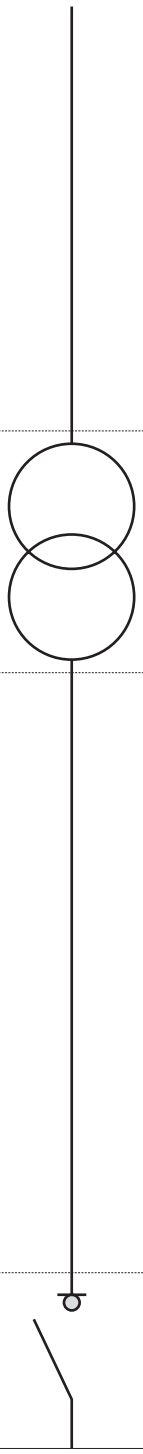

Network upstream

"R" and "X" values upstream of HV/LV transformers (400 V) according to network short-circuit power (Psc in MVA).

MVA	NETWORK	R (mΩ)	X (mΩ)
500	> 63 kV	0.04	0.35
250	> 24 kV close to power plants	0.07	0.7
125	> 24 kV far from power plants	0.14	1.4

If short-circuit power (Psc is known
Off-load voltage Uo (400 V AC or 230 V AC 50 Hz)

$$R_{(m\Omega)} = 0.1 \times X_{(m\Omega)}$$

$$X_{(m\Omega)} = \frac{3.3 \times U_0^2}{P_{cc}\ kVA}$$

Oil-immersed transformers with secondaries 400 V

Values of "R" and "X" according to the power of the transformer.

P (kVA)	50	100	160	200	250	400	630	1000	1250	1600	2000	2500
Isc_3 (kA)	1.80	3.60	5.76	7.20	9.00	14.43	22.68	24.01	30.03	38.44	48.04	60.07
R (mΩ)	43.7	21.9	13.7	10.9	8.7	5.5	3.5	3.3	2.6	2.0	1.6	1.31
X (mΩ)	134	67	41.9	33.5	26.8	16.8	10.6	10.0	8.0	6.3	5.0	4.01

Conductors

$$R_{(m\Omega)} = \frac{\rho \times l_{(m)}}{S_{(mm^2)}} \quad \text{with} \quad \rho = \frac{m\Omega \times mm^2}{m}$$

	RESISTIVITY ρ [10^{-6} mΩ.m]		
	max. I_{sc}	min. I_{sc}	
		Fuse protection	Protection by circuit breaker
Copper	18.51	28	23
Aluminium	29.4	44	37

$$X_{(m\Omega)} = 0.08 \times l_{(m)} \text{ (three-pole cables)}^{(1)}$$
$$X_{(m\Omega)} = 0.13 \times l_{(m)} \text{ (single-pole cables)}^{(1)}$$
$$X_{(m\Omega)} = 0.09 \times l_{(m)} \text{ (separate single-conductor cables)}^{(1)}$$

$$X_{(m\Omega)} = 0.15 \times l_{(m)} \text{ (busbars)}^{(1)}$$

(1) Copper and aluminium

Device in closed position

$$R = 0 \text{ and } X = 0.15\ m\Omega$$

This document is not a contract. SOCOMEC reserves the right to modify features without prior notice in view of continued improvement. 2008 - 2009

Calculating a LV installation's I_{sc} (continued)

Impedance method (continued)

Calculating Isc (impedance method) (continued)

ρ copper = 18.51
ρ aluminium = 29.4
Uo = 230 V

			PHASES		NEUTRAL		PROTECTION	
			R	X	R	X	R	X
Network: 250 MVA	R = 0.07 mΩ	X = 0.7 mΩ	0.07	0.7				
Transformer da 630 kVA	R = 3.5 mΩ	X = 10.6 mΩ	3.5	10.6				
Cables: Aluminium								
Ph: l = 10 m 4 x 240 mm	Ph: R = $\frac{29.4 \times 10}{240 \times 4}$ = 0.306 mΩ	X = $\frac{0.13 \times 10}{4}$ = 0.325 mΩ	0.306	0.325				
N: l = 10 m 2 x 240 mm	N: R = $\frac{29.4 \times 10}{240 \times 2}$ = 0.612 mΩ	X = $\frac{0.13 \times 10}{2}$ = 0.65 mΩ			0.612	0.65		
PE: l = 12 m 1 x 240 mm	PE: R = $\frac{29.4 \times 12}{240}$ = 1.47 mΩ	X = 0.13 x 12 = 1.56 mΩ					1.47	1.56
Device	(transformer protection)	X = 0.15 mΩ		0.15				
Icc	Sub-total: TGBT level "input"		3.87	11.77	0.612	0.65	1.47	1.56
Busbars copper l = 3 m	I'cc							
Ph: 2 x 100 x 5	Ph: R = $\frac{18.51 \times 3}{2 \times 100 \times 5}$ = 0.055 mΩ	X = 0.15 x 3 = 0.45 mΩ	0.055	0.45				
N: 1 x 100 x 5	N: R = $\frac{18.51 \times 3}{1 \times 100 \times 5}$ = 0.11 mΩ	X = 0.15 x 3 = 0.45 mΩ			0.11	0.45		
PE: 1 x 40 x 5	PE: R = $\frac{18.51 \times 3}{40 \times 5}$ = 0.277 mΩ	X = 0.15 x 3 = 0.45 mΩ					0.277	0.45
Total at busbars level:		**3.925**	**12.22**	**0.722**	**1.1**	**1.75**	**2.01**	

At TGBT input

• Three phase loop impedance:

$Z_3 = \sqrt{R_{ph}^2 + X_{ph}^2} = \sqrt{(3.87)^2 + (11.77)^2} = 12.39$ mΩ

I_{sc3} max. = $\frac{1.1 \times 230\ V}{12.39\ m\Omega}$ = 20.5 kA

I_{sc2} max. = 0.86 x 20.5 kA = 17.6 kA

• Single-phase loop impedance:

$Z_1 = \sqrt{(R_{ph} + R_n)^2 + (X_{ph} + X_n)^2}$

$Z_1 = \sqrt{(3.87 + 0.612)^2 + (11.77 + 0.65)^2} = 13.2$ mΩ

$I_{c1} = \frac{1.1 \times 230\ V}{13.2\ m\Omega}$ = 19.2 kA

At busbar input

• Three phase loop impedance:

$Z_3 = \sqrt{R_{ph}^2 \times X_{ph}^2} = \sqrt{(3.925)^2 + (12.22)^2} = 12.8$ mΩ

I'_{sc3} maxi = $\frac{1.1 \times 230\ V}{12.8\ m\Omega}$ = 19.8 kA

I'_{sc2} maxi = 0.86 x 19.8 kA = 17 kA

$\frac{R}{X} = \frac{3.925}{12.22}$ = 0.32 according to fig. 1 see page D.21, k = 1.4

I'_{sc3} peak = 19.8 x $\sqrt{2}$ x 1.4 = 39.2 kA

This 39.7 kA peak value is necessary to define the dynamic withstand of the bars and of the piece of equipment.

• Impedenza del circuito monofase:

$Z_1 = \sqrt{(R_{ph} + R_n)^2 + (X_{ph} + X_n)^2} = \sqrt{(3.925 + 0.722)^2 + (12.22 + 1.1)^2} = 14.1$ mΩ

$I'_{sc1} = \frac{1.1 \times 230\ V}{14.1\ m\Omega}$ = 18 kA

Calculating minimum Isc example

Calculating minimum Isc id identical to the previous calculation, replacing copper and aluminium resistivities by:
$\rho_{copper} = 28$ $\rho_{alu} = 44$

• Phase/neutral single-phase loop impedance:

$Z_1 = \sqrt{(4.11 + 1.085)^2 + (12.22 + 1.1)^2} = 14.3$ mΩ

• Phase/protection single-phase loop impedance:

$Z_1 = \sqrt{(4.11 + 2.62)^2 + (12.22 + 1.1)^2} = 14.92$ mΩ

I_{sc1} mini = $\frac{230\ V}{14.3\ m\Omega}$ = 16 kA I_{sc1} mini = $\frac{230\ V}{14.92\ m\Omega}$ = 15.4 kA

This document is not a contract. SOCOMEC reserves the right to modify features without prior notice in view of continued improvement. 2008 - 2009

Short circuit currents

Calculating a LV installation's I_{sc} (continued)

Quick method

This quick though approximate method enables the I_{sc} on a network pint to be defined, knowing upstream I_{sc} as well as the upstream length and section connection. The tables below are valid for networks with 400 V between phases (with or without neutral).

Proceed therefore as follows: In parts 1 (copper conductors) or 3 (aluminium) of the tables, select the line denoting conductor phase section. Read across the line until reaching the value immediately below the wiring system length. Read down (for copper) or up (for aluminium) until reaching part 2. and stop on the line corresponding to the upstream I_{sc}. The value read at this intersection gives the required I_{sc} value.

Example: Upstream I_{sc} = 20 kA, wiring system: 3 x 35 mm² (copper), 17 m length. In the line denoting 35 mm², the length immediately less than 17 m is 15 m. The intersection of the 15 m column and the 20 kA line gives upstream I_{sc} = 11 kA.

Phase conductor section (mm²)	Wiring system length in m																						
Copper	1.5														1.3	1.8	2.6	3.6	5.1	7.3	10.3	15	21
	2.5												1.1	1.5	2.1	3.0	4.3	6.1	8.6	12	17	24	34
	4												1.7	1.9	2.6	3.7	5.3	7.4	10.5	15	21	30	42
	6											1.4	2.0	2.8	4.0	5.6	7.9	11.2	16	22	32	45	63
	10										2.1	3.0	4.3	6.1	8.6	12.1	17	24	34	48	68	97	137
	16								1.7	2.4	3.4	4.8	6.8	9.7	14	19	27	39	55	77	110	155	219
	25						1.3	1.9	2.7	3.8	5.4	7.6	10.7	15	21	30	43	61	86	121	171	242	342
	35						1.9	2.6	3.7	5.3	7.5	10.6	15	21	30	42	60	85	120	170	240	339	479
	50					1.8	2.5	3.6	5.1	7.2	10.2	14	20	29	41	58	81	115	163	230	325	460	
	70					2.6	3.7	5.3	7.5	10.6	15	21	30	42	60	85	120	170	240	339			
	95				2.5	3.6	5.1	7.2	10.2	14	20	29	41	58	81	115	163	230	325	460			
	120		1.6	2.3	3.2	4.5	6.4	9.1	13	18	26	36	51	73	103	145	205	291	411				
	150	1.2	1.7	2.5	3.5	4.9	7.0	9.9	14	20	28	39	56	79	112	158	223	316	447				
	185	1.5	2.1	2.9	4.1	5.8	8.2	11.7	16	23	33	47	66	93	132	187	264	373	528				
	240	1.8	2.6	3.6	5.1	7.3	10.3	15	21	29	41	58	82	116	164	232	329	465	658				
	300	2.2	3.1	4.4	6.2	8.7	12.3	17	25	35	49	70	99	140	198	279	395	559					
	2 x 120	2.3	3.2	4.5	6.4	9.1	12.8	18	26	36	51	73	103	145	205	291	411	581					
	2 x 150	2.5	3.5	4.9	7.0	9.9	14.0	20	28	39	56	79	112	158	223	316	447	632					
	2 x 185	2.9	4.1	5.8	8.2	11.7	16.5	23	33	47	66	93	132	187	264	373	528	747					
	3 x 120	3.4	4.8	6.8	9.6	13.6	19	27	39	54	77	109	154	218	308	436	616						
	3 x 150	3.7	5.2	7.4	10.5	14.8	21	30	42	59	84	118	168	237	335	474	670						
	3 x 185	4.4	6.2	8.8	12.4	17.5	25	35	49	70	99	140	198	280	396	560							

I_{sc} upstream (kA)	I_{sc} at chosen point (kA)																						
I_{sc}	100	93.5	91.1	87.9	83.7	78.4	71.9	64.4	56.1	47.5	39.01	31.2	24.2	18.5	13.8	10.2	7.4	5.4	3.8	2.8	2.0	1.4	1.0
	90	82.7	82.7	80.1	76.5	72.1	66.6	60.1	52.8	45.1	37.4	30.1	23.6	18.1	13.6	10.1	7.3	5.3	3.8	2.7	2.0	1.4	1.0
	80	74.2	74.2	72.0	69.2	65.5	61.0	55.5	49.2	42.5	35.6	28.9	22.9	17.6	13.3	9.9	7.3	5.3	3.8	2.7	2.0	1.4	1.0
	70	65.5	65.5	63.8	61.6	58.7	55.0	50.5	45.3	39.5	33.4	27.5	22.0	17.1	13.0	9.7	7.2	5.2	3.8	2.7	1.9	1.4	1.0
	60	56.7	56.7	55.4	53.7	51.5	48.6	45.1	40.9	36.1	31.0	25.8	20.9	16.4	12.6	9.5	7.1	5.2	3.8	2.7	1.9	1.4	1.0
	50	47.7	47.7	46.8	45.6	43.9	41.8	39.2	36.0	32.2	28.1	23.8	19.5	15.6	12.1	9.2	6.9	5.1	3.7	2.7	1.9	1.4	1.0
	40	38.5	38.5	37.9	37.1	36.0	34.6	32.8	30.5	27.7	24.6	21.2	17.8	14.5	11.4	8.8	6.7	5.0	3.6	2.6	1.9	1.4	1.0
	35	33.8	33.8	33.4	32.8	31.9	30.8	29.3	27.5	25.2	22.6	19.7	16.7	13.7	11.0	8.5	6.5	4.9	3.6	2.6	1.9	1.4	1.0
	30	29.1	29.1	28.8	28.3	27.7	26.9	25.7	24.3	22.5	20.4	18.0	15.5	12.9	10.4	8.2	6.3	4.8	3.5	2.6	1.9	1.4	1.0
	25	24.4	24.4	24.2	23.8	23.4	22.8	22.0	20.9	19.6	18.0	161	14.0	11.9	9.8	7.8	6.1	4.6	3.4	2.5	1.9	1.3	1.0
	20	19.6	19.6	19.5	19.2	19.0	18.6	18.0	17.3	16.4	15.2	13.9	12.3	10.6	8.9	7.2	5.7	4.4	3.3	2.5	1.8	1.3	1.0
	15	14.8	14.8	14.7	14.6	14.4	14.2	13.9	13.4	12.9	12.2	11.3	10.2	9.0	7.7	6.4	5.2	4.1	3.2	2.4	1.8	1.3	0.9
	10	9.9	9.9	9.9	9.8	9.7	9.6	9.5	9.3	9.0	8.6	8.2	7.6	6.9	6.2	5.3	4.4	3.6	2.9	2.2	1.7	1.2	0.9
	7	7.0	7.0	6.9	6.9	6.9	6.8	6.7	6.6	6.5	6.3	6.1	5.7	5.3	4.9	4.3	3.7	3.1	2.5	2.0	1.6	1.2	0.9
	5	5.0	5.0	5.0	5.0	4.9	4.9	4.9	4.8	4.7	4.6	4.5	4.3	4.1	3.8	3.5	3.1	2.7	2.2	1.8	1.4	1.1	0.8
	4	4.0	4.0	4.0	4.0	4.0	3.9	3.9	3.9	3.8	3.8	3.7	3.6	3.4	3.2	3.0	2.7	2.3	2.0	1.7	1.3	1.0	0.8
	3	3.0	3.0	3.0	3.0	3.0	3.0	3.0	2.9	2.9	2.9	2.8	2.7	2.6	2.5	2.4	2.2	2.0	1.7	1.5	1.2	1.0	0.8
	2	2.0	2.0	2.0	2.0	2.0	2.0	2.0	2.0	2.0	1.9	1.9	1.9	1.8	1.8	1.7	1.6	1.5	1.3	1.2	1.0	0.8	0.7
	1	1.0	1.0	1.0	1.0	1.0	1.0	1.0	1.0	1.0	1.0	1.0	1.0	1.0	0.9	0.9	0.9	0.8	0.38	0.7	0.7	0.6	0.5

Phase conductor section (mm²)	Wiring system length in m																						
Aluminium	2.5														1.3	1.9	2.7	3.8	5.4	7.6	10.8	15	22
	4												1.1	1.5	2.2	3.0	4.3	6.1	8.6	12	17	24	34
	6												1.6	1.7	2.5	3.5	4.9	7.0	9.9	14	20	28	40
	10											1.5	2.1	2.9	4.1	5.8	8.2	11.6	16	23	33	47	66
	16										2.2	3.0	4.3	6.1	8.6	12	17	24	34	49	69	98	138
	25								1.7	2.4	3.4	4.8	6.7	9.5	13	19	27	38	54	76	108	152	216
	35							1.7	2.4	3.3	4.7	6.7	9.4	13	19	27	38	53	75	107	151	213	302
	50						1.6	2.3	3.2	4.5	6.4	9.0	13	18	26	36	51	72	102	145	205	290	410
	70						2.4	3.3	4.7	6.7	9.4	13	19	27	38	53	75	107	151	213	302	427	
	95					2.3	3.2	4.5	6.4	9.0	13	18	26	36	51	72	102	145	205	290	410		
	120					2.9	4.0	5.7	8.1	11.4	16	23	32	46	65	91	129	183	259	366			
	150					3.1	4.4	6.2	8.8	12	18	25	35	50	70	99	141	199	281	398			
	185				2.6	3.7	5.2	7.3	10.4	15	21	29	42	59	83	117	166	235	332	470			
	240		1.6	2.3	3.2	4.6	6.5	9.1	13	18	26	37	52	73	103	146	207	293	414				
	300	1.4	1.9	2.7	3.9	5.5	7.8	11.0	16	22	31	44	62	88	124	176	249	352	497				
	2 X 120	1.4	2.0	2.9	4.0	5.7	8.1	11.4	16	23	32	46	65	91	129	183	259	366	517				
	2 X 150	1.6	2.2	3.1	4.4	6.2	8.8	12	18	25	35	50	70	99	141	199	281	398					
	2 X 185	1.8	2.6	3.7	5.2	7.3	10.4	15	21	29	42	59	83	117	166	235	332	470					
	2 X 240	2.3	3.2	4.6	6.5	9.1	12.9	18	26	37	52	73	103	146	207	293	414	585					
	3 X 120	2.1	3.0	4.3	6.1	8.6	12.1	17	24	34	48	69	97	137	194	274	388	549					
	3 X 150	2.3	3.3	4.7	6.6	9.3	13.2	19	26	37	53	75	105	149	211	298	422	596					
	3 X 185	2.8	3.9	5.5	7.8	11.0	15.6	22	31	44	62	88	125	176	249	352	498	705					
	3 X 240	3.4	4.8	6.9	9.7	13.7	19	27	39	55	78	110	155	219	310	439	621						

This document is not a contract. SOCOMEC reserves the right to modify features without prior notice in view of continued improvement. 2008 - 2009

Protection of wiring systems

Short-circuit currents lead to temperature stress in conductors. To avoid damaging or eroding cable insulation (which may in turn lead to insulation faults) or busbar supports, conductors having the following indicated minimal sections must be used.

Busbars

Short-circuit thermal effects on busbars are caused by conductor temperature rise. This temperature rise must be compatible with busbar support characteristics.

Example: for a SOCOMEC busbar support (with a busbar temperature of 80 °C prior to short-circuit).

$$S\ min.\ (mm^2) = 1000 \times \frac{Isc\ (kA)}{70} \times \sqrt{t\ (s)}$$

S min.: minimum phase cross-section
Isc: rms short-circuit current
t: protective device breaking time
Also see the busbar calculation on see page D.73.

Insulated conductors

The minimum cross-section is established as follows:

$$S\ mini\ (mm^2) = 1000 \times \frac{Isc\ (kA)}{k} \times \sqrt{t\ (s)}$$

Isc: minimum short-circuit current in kA rms (see page D.20).
t: protective device tripping time in secs.
k: constant, depending on the insulation (see table B).

Insulated conductors (continued)

Table B: constant k (IEC 60364)

	INSULATION	CONDUCTORS	
		COPPER	ALUMINIUM
Live conductors or protective conductors which are part	Rubber	115	76
	Butyl	143	94
Protective conductors which are part of the wiring system	Rubber	143	95
	Butyl	176	116
	uninsulated[1]	159[1] 138[2]	105[1] 91[2]

1) Premises without fire risk
2) Premises with fire risk

To avoid doing the calculation, please refer to table A which gives the coefficient by which the short circuit current must be multiplied to obtain the minimum cross-section.

$$Section\ mini.\ (mm^2) = ksc \times Isc\ mini.(kA)$$

Example
For a copper cable, insulated with PVC and protected by DIRIS CP adjusted to ts = 100 ms, Isc min. = 22 kA. This gives: ksc = 2.75 for live conductors in table A. Active conductors S min. = 2.75 x 22 = 60 mm2
A 70 mm2 section will be chosen
The same conductor in aluminium should have a minimum cross-section of 60 mm2 x 1.5 = 90 mm2

Maximum conductor length

Having already established minimum conductor length, ensure that the protective device placed upstream of conductors has a tripping time compatible with the conductors' maximum temperature stress. To do this, the minimum short circuit current must be sufficient to trip the protection device. Conductor length must be within the limits given by tables A and B see page D.26.

Table A: K_{sc} coefficient

CUT-OFF ITIME IN m/s	For a **1 kA rms** short circuit current						
	LIVE COPPER CONDUCTOR MINIMUM CROSS SECTION		COPPER PROTECTION CONDUCTOR MINIMUM CROSS SECTION				
	INSULATION ▶ PVC	PR-EPR	CONDUCTORS FORMING PART OF WIRING SYSTEM		CONDUCTORS FORMING PART OF WIRING SYSTEM		
			PVC	PR	PVC	PR	UNINSULATED
5	0.62	0.50	0.62	0.50	0.50	0.40	0.45
10	0.87	0.70	0.87	0.70	0.70	0.57	0.63
15	1.06	0.86	1.06	0.86	0.86	0.70	0.77
25	1.37	1.10	1.37	1.10	1.10	0.89	0.99
35	1.63	1.31	1.63	1.31	1.31	1.06	1.18
50	1.94	1.58	1.94	1.56	1.56	1.27	1.40
60	2.13	1.72	2.13	1.72	1.72	1.40	1.54
75	2.38	1.89	2.38	1.89	1.89	1.54	1.72
100	2.75	2.21	2.75	2.21	2.21	1.79	1.99
125	3.07	2.47	3.07	2.47	2.47	2.00	2.22
150	3.37	2.71	3.37	2.71	2.71	2.20	2.44
175	3.64	2.93	3.64	2.93	2.93	2.38	2.63
200	3.89	3.13	3.89	3.13	3.13	2.54	2.81
250	4.35	3.50	4.35	3.50	3.50	2.84	3.15
300	4.76	3.83	4.76	3.83	3.83	3.11	3.44
400	5.50	4.42	5.50	4.42	4.42	3.59	3.98
500	6.15	4.95	6.15	4.95	4.95	4.02	4.45
1000	8.70	6.99	8.70	6.99	6.99	5.68	6.29

For aluminium conductors, multiply the values in the table by 1.5.

This document is not a contract. SOCOMEC reserves the right to modify features without prior notice in view of continued improvement. 2008 - 2009

Short circuit currents

Fuse protection of wiring systems

Maximum length of conductors protected by fuses

Table A and B indicate maximum lengths in the following conditions:
- 230/400 V three-phase circuit,
- minimal short-circuit current,
- contact line neutral section = phases section,
- copper conductors.

These tables are valid whatever the cable insulation (PVC, PR, EPR). When two values are given, the first corresponds to PVC cables and the second to PR/EPR cables.
The lengths must be multiplied by the coefficients in table C for 230 V/400 V three-phase networks with distributed neutral, or 230 single-phase networks.
For aluminium cable: multiply the lengths in the tables by 0.41.

Table A: maximum cable lengths in m protected by **gG** fuses

HP C / S (mm²)	16	20	25	32	40	50	63	80	100	125	160	200	250	315	400	500	630	800	1000	1250
1.5	82	59/61	38/47	18/22	13/16	6/7														
2.5		102	82	49/56	35/43	16/20	12/15	5/7												
4			131	89	76	42/52	31/39	14/17	8/10	4/5										
6				134	113	78	67/74	31/39	18/23	10/12	7/9									
10					189	129	112	74	51/57	27/34	19/24	9/12	7/9	3/4						
16							179	119	91	67	49/56	24/30	18/23	9/11	5/7	3/4				
25								186	143	104	88	59/61	45/53	22/27	13/16	7/9	4/5			
35									200	146	123	86	75	43/52	25/36	14/18	8/11	4/5		
50										198	167	117	101	71	45/74	26/33	16/22	8/11	5/7	
70											246	172	150	104	80	57/60	34/42	17/22	11/14	
95												233	203	141	109	82	62	32/40	20/25	9/11
120													256	179	137	103	80	51/57	32/40	14/18
150													272	190	145	110	85	61	42/48	20/24
185														220	169	127	98	70	56	27/34
240															205	155	119	85	68	43/46

Table B: maximum cable lengths in m protected by **aM** fuses

HP C / S (mm²)	16	20	25	32	40	50	63	80	100	125	160	200	250	315	400	500	630	800	1000	1250
1.5	28/33	19/23	13/15	8/10	6/7															
2.5	67	47/54	32/38	20/24	14/16	9/11	6/7													
4	108	86	69	47/54	32/38	22/25	14/17	9/11	6/7											
6	161	129	104	81	65/66	45/52	29/34	19/23	13/15	9/10	6/7									
10				135	108	88	68	47/54	32/38	21/25	14/16	9/11	6/7							
16						140	109	86	69	49/55	32/38	21/25	14/17	9/11						
25								135	108	86	67	47/54	32/38	21/25	14/16	9/11				
35									151	121	94	75	58/60	38/45	25/30	17/20	11/13	7/9		
50											128	102	82	65	43/51	29/36	19/24	13/15	8/10	
70												151	121	96	75	58/60	38/45	25/30	17/20	11/13
95												205	164	130	102	82	65	43/51	29/34	19/23
120														164	129	104	82	65	44/52	29/35
150															138	110	88	69	55	37/44
185																128	102	80	64	51
240																	123	97	78	62

Table C: corrective coefficients for other networks

USE	COEFFICIENTE
Neutral section = 0.5 x phase section	0.67(1)
Circuit without neutral	1.73

(1) Entry to the table is through the phase section.

This document is not a contract. SOCOMEC reserves the right to modify features without prior notice in view of continued improvement. 2008 - 2009

Direct and indirect contacts

Protection against indirect contacts

Definition

Direct contact is the contact of persons with active parts (phases, neutral) which are normally live (busbars, terminals, etc.), which result in an electric shock.

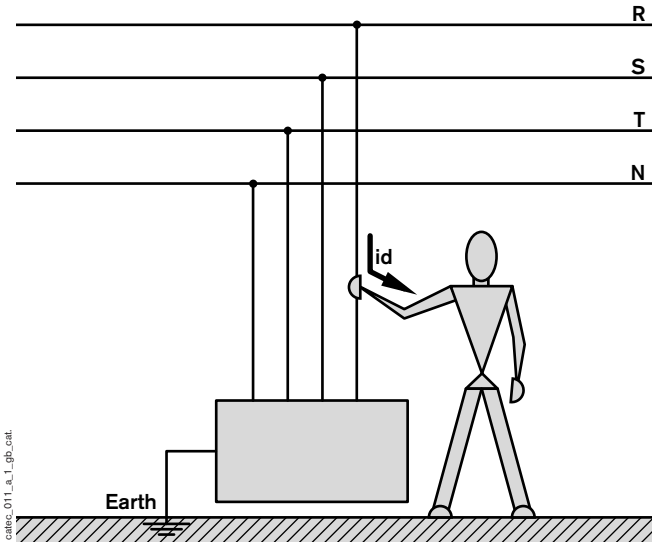

Fig. 1: direct contact

Protective measures

Protecting against direct contact is ensured by one of the following measures:

- placing live conductors out of reach by using obstacles or placing at a distance,
- insulating live conductors,
- using barriers or enclosures: the minimum degree of protection offered by the enclosure must be IP 2x or xxB for live parts. Enclosure opening shall only be possible in one of the following instances:
  - with a key or other tool,
  - after switching off active parts,
  - if a second barrier with IP > 2x or xxB is employed inside the enclosure (see IP definition on page D.11).
- using 30 mA residual differential-current devices. This is an accepted complementary protective measure, should the other protective measures fail.
- using ELV (Extra-Low Voltage).

Using ELV

Use of ELV (for a definition of this see page D.6) represents protection against both direct and indirect contact.

The following can be distinguished:

- **SELV**

  Security Extra-Low Voltage. This must be:
  - produced by certain sources such as security transformers, inverters, battery banks, and generator sets, etc.,
  - completely independent from elements liable to undergo differential potential (another installation's earth, or another circuit, etc.).
- **PELV**

  Protection Extra-Low Voltage. This is identical to SELV, except that it has earth connection for operating reasons (electronics, computing, etc.). Using PELV may cause certain restrictions as compared to SELV concerning protection against direct contact.
- **FELV**

  Functional Extra-Low Voltage. This covers all other ELV applications. It does not offer protection against direct or indirect contact.

Complementary protection against the direct contacts

Whatever the neutral load, complementary protection against direct contacts is provided, in particular by the use of high sensitivity RCD (≤ 30 mA).

Standards IEC 60 364 and IEC 60364 require the use of such devices in the following cases in particular:

- circuits supplying socket outlets ≤ 32 A,
- temporary installations, fairground installations,
- worksite installations,
- bathrooms, swimming pools,
- caravans, pleasure boats,
- vehicle power supply,
- agricultural and horticultural establishments,
- heating cables and coverings embedded in the floor or walls of a building.

These complementary protective measures against direct contacts, according to standard IEC 60479, are no longer acceptable when the contact voltage risks reaching 500 V: human impedance risks allowing a dangerous current higher than 500 mA to pass through the body.

This document is not a contract. SOCOMEC reserves the right to modify features without prior notice in view of continued improvement. 2008 - 2009

Direct and indirect contacts

Protection against indirect contacts

Definition

Indirect contact is the contact of persons with conductive parts which have been accidentally made live following an insulation fault.

Protection against indirect contact can be performed:
- either without automatic disconnection of supply,
- or with automatic disconnection of supply.

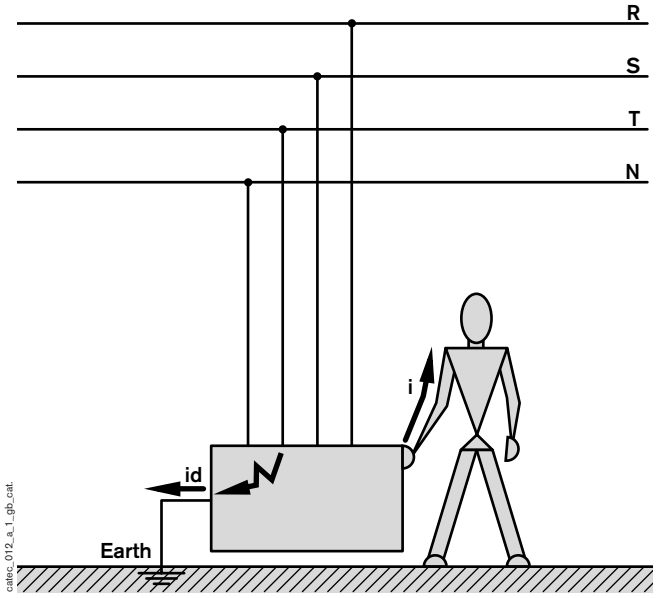

Fig. 1: indirect contact

Protection without automatic disconnection of supply

Protection against indirect contacts without automatic disconnection of supply can be ensured by:
- using ELV (Extra-Low Voltage) (see page D.27),
- separating masses so that none can be simultaneously in contact with both masses,
- double or reinforced insulation of material (class II),
- non earth linked equipotential connection of all simultaneously accessible masses,
- electric separation (by transformer for circuits < 500 V).

Protection with automatic disconnection of supply

Protection against indirect contact with automatic disconnection of supply consists of separating from the supply circuits or material, with an insulation fault between an active part and the mass.

To prevent hazardous physiological effects for personnel who would be in contact with the faulty part, contact voltage Uc is limited to a limit value UL.

The latter is determined according to:
- admissible current IL for the human body,
- current flow time (see fig. 1 page D.30),
- earth-link arrangement,
- installation specifications.

PRESUMED CONTACT VOLTAGE	PROTECTION DEVICE MAXIMUM BREAKING TIME (S)
(V)	U_L = 50 V
25	5
50	5
75	0.60
90	0.45
110	-
120	0.34
150	0.27
220	0.17
230	-
280	0.12
350	0.08
500	0.04

This installation switch-off is performed differently according to linking arrangements (neutral loads).

IEC 364 standard stipulates the protection device's maximum cut-off time in normal (U_L = 50 V) and in damp conditions (UL = 25 V), (U_L is the highest contact voltage that people can withstand without danger), (see table above).

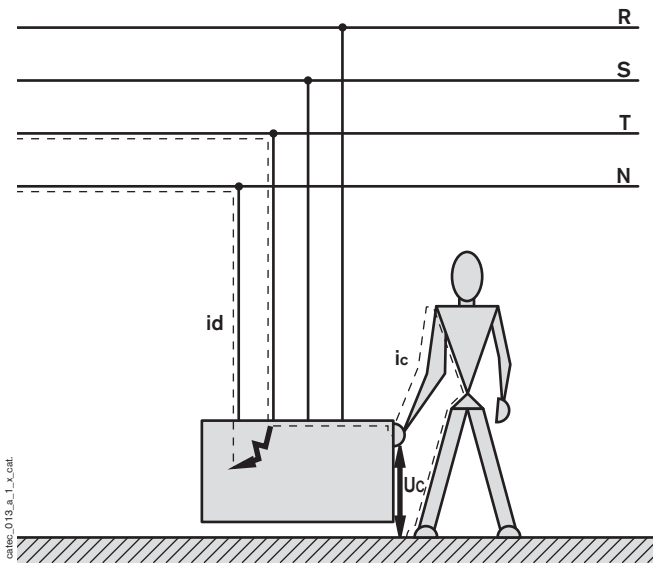

Fig. 2: contact voltage limit value U_L

This document is not a contract. SOCOMEC reserves the right to modify features without prior notice in view of continued improvement. 2008 - 2009

Protection against indirect contacts (continued)

Protection with automatic disconnection of supply (continued)

• TT load

With TT load protection is ensured by differential devices. In this case, the conductor cross-section and length are not taken into consideration.

Ensure that earth connection is as follows:

$$R_T < \frac{U_L}{I_{\Delta n}}$$

U_L: limit voltage
$I_{\Delta n}$: differential device adjustment current

Example: should there be a fault, contact voltage can be limited to U_L = 50 V.

The differential device is adjusted to IΔn = 500 mA = 0.5 A.

Earth connection resistance must not exceed:

$$R_{T\,maxi} = \frac{50\ V}{0.5\ A} = 100\ \Omega$$

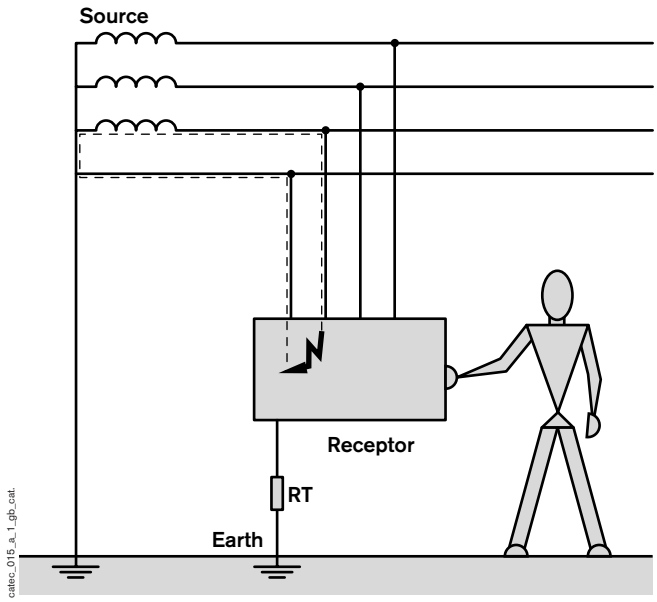

Fig. 1: TT load fault current

• TN and IT load

Introduction

When the network is not protected by a differential device, correct co-ordination between the protection device and the choice of conductors must be ensured.

Indeed, if the conductor impedance is too high, there is a risk of a limited fault current tripping the protection device over a longer period of time than is stipulated by IEC 364 standard.

The resulting current may thus cause a dangerous contact voltage. To limit loop impedance, conductor length for a given section should be limited.

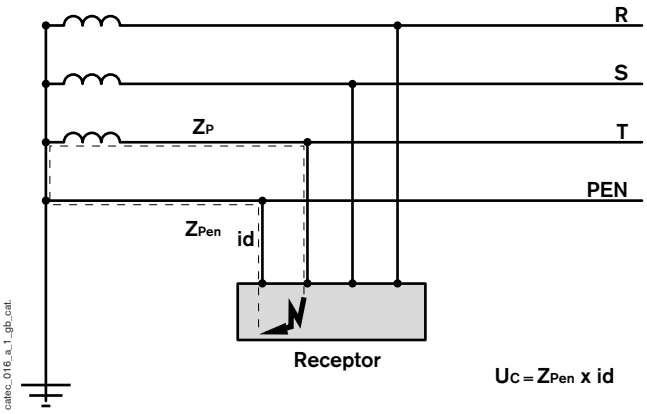

Fig. 2: TN load current fault

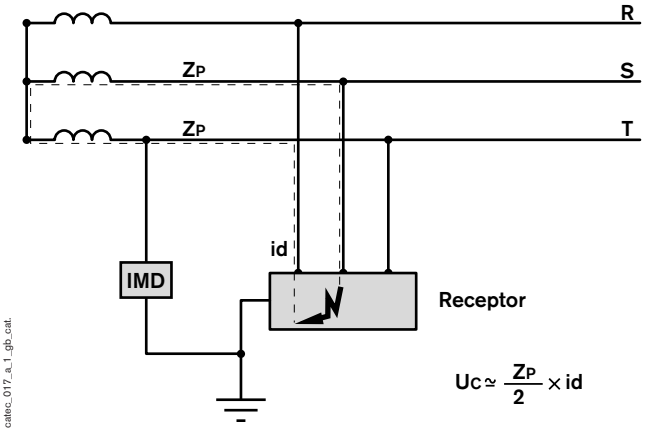

Fig. 3: IT load current fault

Note: protection against overcurrents is only effective in the presence of dead faults.

A RESYS differential device or a DLRD 470 used as a pre-alarm, are effective means of preventing impedance faults and the maintaining of dangerous voltages.

This document is not a contract. SOCOMEC reserves the right to modify features without prior notice in view of continued improvement. 2008 - 2009

Direct and indirect contacts

Protection against indirect contacts (continued)

Protection with automatic disconnection of supply (continued)

- **TN and IT load (continued)**

Maximum breaking time

To avoid being in zones 3 and 4 in figure below, IEC 364 specifies a maximum breaking time according to the electrical network and voltage limit:

- 50 V for dry premises,
- 25 V for damp premises, building sites and livestock buildings, etc.

Table A: protection device's maximum breaking time in seconds

NOMINAL VOLTAGE	LOAD	TN	IT WITHOUT NEUTRAL	IT WITH NEUTRAL
	U_L	50	50	50
230/400		0.4	0.4	0.8
400/690		0.2	0.2	0.4

Special case

With a TN load, breaking time can be greater than the time given by table A (but still less than 5 sec.) if:

- the circuit is not a terminal circuit and does not supply a mobile or portable load,
- the circuit does not supply equipment or current outlet,
- one of the following 2 conditions is met:
  - the principal equipotential link is doubled by an equipotential link identical to the principal link,
  - the protection conductor's resistance Rpe is:

$$Rpe < \frac{50}{U_o} \times (Rpe + Za)$$

U_0: network phase to neutral voltage

Z_a: impedance including the source and the live conductor up to fault point.

Maximum conductor length

The conductor's limit length can be determined by an approximate calculation, valid for installations supplied by a star-delta or zigzag coupling transformer.

$$L\ (m) = K \frac{U_o \times S}{(1 + m)\ I_d}$$

Uo: phase-to-neutral voltage (230 V on a 230/400 network)

S: phase conductors cross section in mm² with TN and IT loads without neutral

m = $^{S}/_{Spe}$ Spe: PE or PEN section

Id: fault current in A

Fuse protection: current reached for melting time equal to protection device's opening time (maximum lengths are given in table B on page D.26)

K: variable according to the neutral load and the conductor (see table B).

Table B: K values

ARRANGEMENT / CONDUCTOR		TN WITHOUT NEUTRAL	IT WITH NEUTRAL
Copper	34.7	30	17.3
Aluminium	21.6	18.7	11

The influence of reactance is negligible for cross-sections less than 120 mm². Beyond that resistance has to be increased by:

- 15% for 150 mm² cross section,
- 20% for 185 mm² cross section,
- 25% for 240 mm² cross section,
- 30% for 300 mm² cross section.

For cross sections greater than above: an exact impedance calculation must be performed using X = 0.08 mΩ / m.

Effect of electrical current on the human body

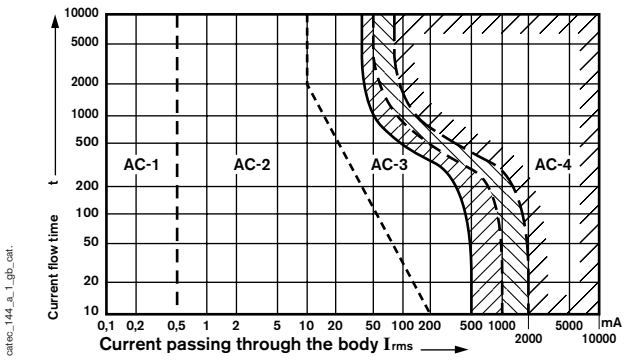

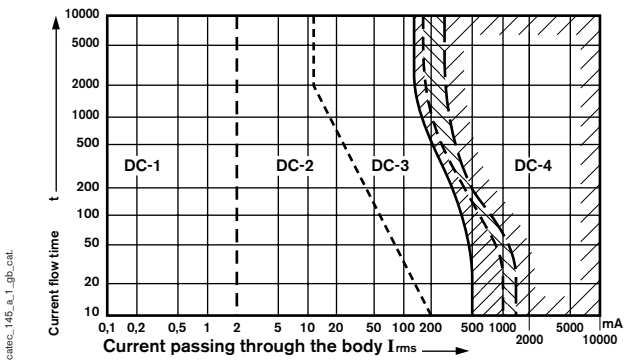

The current passing through the human body, by its physiopathological effect, affects the circulatory and respiratory functions and can lead to death, and for high values, cause serious burns.

Zones -1 to -4 correspond to the different levels of effect:

AC/DC-1: non-perception

AC/DC-2: perception

AC/DC-3: reversible effects, muscle contraction

AC/DC-4: possibility of irreversible effects.

This document is not a contract. SOCOMEC reserves the right to modify features without prior notice in view of continued improvement. 2008 - 2009

Fuse protection against indirect contacts

Maximum length of conductors protected by fuses

The length of conductors protected against indirect contacts must be limited.

Tables B and C give a direct reading of the maximum lengths of copper conductors. They are determined in the following conditions:
- network 230/400 V,
- TN load,
- maximum contact voltage U_L = 50 V.

For other uses, the value read in tables B and C must be multiplied by the coefficient in table A.

Table A: correction coefficient

IT load without neutral	0.86
IT load with neutral	0.5
Neutral cross section = 1/2 phase cross section	0.67
Aluminium conductor	0.625

Table B: maximum lengths (in m) of conductors protected by **gG** fuses

S (mm²)	16	20	25	32	40	50	63	80	100	125	160	200	250	315	400	500	630	800	1000	1250
1.5	53	40	32	22	18	13	11	7	8	4	3									
2.5	88	66	53	36	31	21	18	12	9	7	6	4								
4	141	106	85	58	49	33	29	19	15	11	9	6	6	4						
6	212	159	127	87	73	50	43	29	22	16	14	10	8	6	4					
10	353	265	212	145	122	84	72	48	37	28	23	16	14	10	7	6	4			
16	566	424	339	231	196	134	116	77	59	43	36	25	22	15	12	9	7	5	4	
25	884	663	530	361	306	209	181	120	92	67	57	40	35	24	18	14	11	8	6	4
35		928	742	506	428	293	253	169	129	94	80	56	48	34	26	20	15	11	9	6
50				687	581	398	343	229	176	128	108	76	66	46	35	27	20	15	12	8
70					856	586	506	337	259	189	159	11	97	67	52	39	30	22	17	11
95						795	687	458	351	256	216	151	131	92	70	53	41	29	23	16
120							868	578	444	323	273	191	166	116	89	67	62	37	23	20
150								615	472	343	290	203	178	123	94	71	54	39	31	21
185								714	547	399	336	235	205	145	110	82	64	46	36	24
240									666	485	409	286	249	173	133	100	77	55	44	29
300										566	477	334	290	202	155	117	90	65	51	34

Table C: maximum lengths (in m) of conductors protected by **aM** fuses

S (mm²)	16	20	25	32	40	50	63	80	100	125	160	200	250	315	400	500	630	800	1000	1250
1.5	28	23	18	14	11	9	7	6	5	4										
2.5	47	38	30	24	19	15	12	9	8	6	5									
4	75	60	48	38	30	24	19	15	12	10	8		6	5	4					
6	113	90	72	57	45	36	29	23	18	14	11	9	7	6	5	4				
10	188	151	121	94	75	60	48	38	30	24	19	15	12	10	8	6	5	4		
16	301	241	193	151	121	96	77	60	48	39	30	24	19	15	12	10	8	6	5	4
25	470	377	302	236	188	151	120	94	75	60	47	38	30	24	19	16	12	9	8	6
35	658	527	422	330	264	211	167	132	105	84	66	53	42	33	26	21	17	13	11	8
50	891	714	572	447	357	285	227	179	144	115	90	72	57	46	36	29	23	18	14	11
70			845	660	527	422	335	264	211	169	132	105	84	67	53	42	33	26	21	17
95				895	716	572	454	358	286	229	179	143	115	91	72	57	45	36	29	23
120					904	723	574	462	362	289	226	181	145	115	90	72	57	45	36	29
150						794	630	496	397	317	248	198	159	126	99	79	63	50	40	32
185							744	586	469	375	293	234	188	149	117	94	74	59	47	38
240								730	584	467	365	292	234	185	146	117	93	73	58	47
300									702	562	439	351	281	223	175	140	11	88	70	56

Example

A circuit consists of a copper cable 3 x 6 mm² and is protected by a 40 A gG fuse. Its length must be less than 73 m so that protection against indirect contacts is guaranteed in TN 230 V/400 V.

- If the cable is an aluminium one, maximum length is: 0.625 x 73 m = 45.6 m.
- In IT load with neutral and an aluminium cable, the length is: 0.625 x 0.6 x 73 m = 22.8 m.

This document is not a contract. SOCOMEC reserves the right to modify features without prior notice in view of continued improvement. 2008 - 2009

Direct and indirect contacts

Protection against indirect contacts by differential relay

TT load

Differential protection constitutes practically the only means of protection against indirect contacts in this load.

To avoid, for example, a contact voltage higher than 50 V, the current IΔn must be such that:

$$I_{\Delta n} \leq \frac{50}{R_p}$$

R_p: earth connection resistance in Ω

Where the earth connection is particularly difficult to make and where the values may exceed a hundred ohms (high mountain, arid areas, etc.), installation of high sensitivity (H.S.) devices is an answer to the previous situation.

TNS load

In this load, the fault current is equivalent to a short circuit current between phase and neutral. The latter is eliminated by the appropriate devices (fuses, circuit breakers, etc.) in a time compatible with the protection against indirect contacts. When this time cannot be respected (wiring systems that are too long, hence insufficient minimum I_{sc}, protection device reaction time too long, etc.), it is necessary to accompany the overcurrent protection with a differential protection device. This arrangement allows protection to be provided against indirect contacts, with practically any length of wiring system.

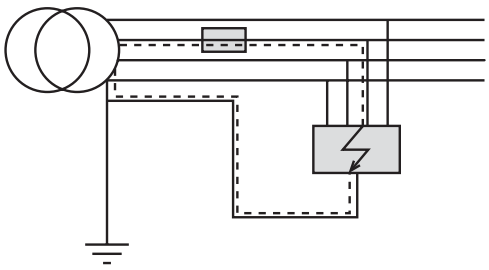

catec_147_a_1_x_cat.

IT load

Circuit breaking is normally not necessary at the first fault. A dangerous contact voltage can occur on the second fault or where masses are connected to non-interconnected or distant earth connections or between simultaneously accessible masses connected to the same earth connection and whose protection circuit impedance is too high.

For these reasons, in IT load, a differential device is obligatory:
- at the origin of the parts of the installation whose protection networks or masses are connected to non-interconnected earth connections,
- in the same situation as that mentioned in TNS (breaking conditions on second fault not provided by the overcurrent protection devices in the required safety conditions).

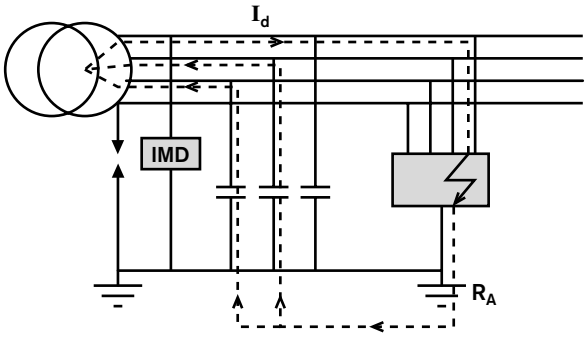

catec_148_a_1_gb_cat.

Protection against indirect contacts of the mass groups connected to independent earth connections

In TT neutral load as in IT, when the masses of the electrical equipment are connected to separate earth connections downstream of the same power supply, each group of masses must be protected by its own dedicated device.

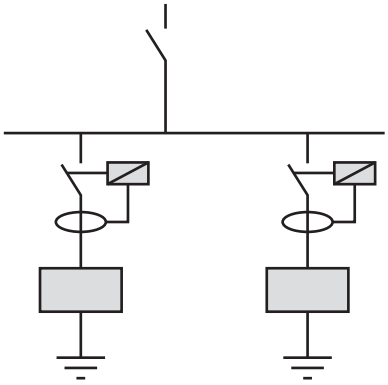

catec_149_a_1_x_cat.

Exemption from high sensitivity (H.S.) protection of computer equipment sockets

Computer equipment can have high leakage currents, making its use downstream of a high sensitivity differential device hazardous.

A proposal was made by the labour ministry with the decree of 08/01/92 fixing the practical arrangements for the taking of complementary protective measures against direct contacts; thus sockets ≤ 32 A supplying fixed or semi-fixed class I equipment of which breaking not caused by an insulation fault is incompatible with service requirements may be exempted from the installation of H.S. devices.

Only the head of the establishment concerned can decide which sockets which may benefit from this exemption. These dedicated sockets, without H.S. protection, must be specifically identified so as to prevent them being used for other applications.

This document is not a contract. SOCOMEC reserves the right to modify features without prior notice in view of continued improvement. 2008 - 2009

Protection against indirect contacts by differential relay (continued)

Definitions

Voltage drop is the voltage difference observed between the installation's point of origin and the receptor's connection point.

To ensure correct receptor operating, standards IEC 60 364 and IEC 364 define a maximum voltage drop (see table A).

Table A: IEC 60 364 maximum voltage drop

	LIGHTING	OTHER USES
Direct public mains LV supply		
• single phase circuits	6%	10%
• three-phase circuits	3%	5%
HV/LV substation supply		
• single phase circuits	12%	16%
• three–phase circuits	6%	8%

Calculating voltage drop in a cable of length L

$$\Delta u = Ku \times I\ (\text{Amperes}) \times L\ (\text{km})$$

Table B: Ku values

CABLE CROSS SECTION mm²	DC CURRENT	Multiconductor cables or trefoil monoconductor cables			Single-conductor joined cable layout in flat formation			Separate single-conductor cables		
		cos 0.3	cos 0.5	cos 0.8	cos 0.3	cos 0.5	cos 0.8	cos 0.3	cos 0.5	cos 0.8
1.5	30.67	4.68	7.74	12.31	4.69	7.74	12.32	4.72	7.78	12.34
2.5	18.40	2.84	4.67	7.41	85	4.68	7.41	2.88	4.71	7.44
4	11.50	1.80	2.94	4.65	1.81	2.95	4.65	1.85	2.99	4.68
6	7.67	1.23	1.99	3.11	1.24	1.99	3.12	1.27	2.03	3.14
10	4.60	0.77	1.22	1.89	0.78	1.23	1.89	0.81	1.26	1.92
16	2.88	0.51	0.79	1.20	0.52	0.80	1.20	0.55	0.83	1.23
25	1.84	0.35	0.53	0.78	0.36	0.54	0.78	0.40	0.57	0.81
35	1.31	0.27	0.40	0.57	0.28	0.41	0.58	0.32	0.44	0.60
50	0.92	0.21	0.30	0.42	0.22	0.31	0.42	0.26	0.34	0.45
70	0.66	0.17	0.23	0.31	0.18	0.24	0.32	0.22	0.28	0.34
95	0.48	0.15	0.19	0.24	0.16	0.20	0.25	0.20	0.23	0.27
120	0.38	0.13	0.17	0.20	0.14	0.17	0.21	0.18	0.21	0.23
150	0.31	0.12	0.15	0.17	0.13	0.15	0.18	0.17	0.19	0.20
185	0.25	0.11	0.13	0.15	0.12	0.14	0.15	0.16	0.17	0.18
240	0.19	0.10	0.12	0.12	0.11	0.13	0.13	0.15	0.16	0.15
300	0.15	0.10	0.11	0.11	0.11	0.12	0.12	0.15	0.15	0.14
400	0.12	0.09	0.10	0.09	0.10	0.11	0.10	0.14	0.14	0.12

Single phase circuits: multiply the values by 2.

Example

A 132 kW motor consumes 233 A with a voltage of 400 V. It is supplied by 3 x 150 mm² copper monoconductor cables, 200 mm long (0.2 km).

- Under normal operating conditions, cos φ = 0.8 → Ku 0.18

  Δu = 0.18 x 233 x 0.2 = 8.4 V or 2.1% of 400 V.
- With on-line start-up cos φ = 0.3

  and Id = 5 In = 5 x 233 A = 1165A

  Ku = 0.13

  Δu = 0.13 x 1165 x 0.2 = 20.3 V or 7.6% of 400 V.

The conductor cross section is sufficient to meet the maximum voltage drop imposed by standard IEC 60 364.

Note: this calculation is valid for 1 cable per phase.

For n cables per phase, simply divide the voltage drop by n.

This document is not a contract. SOCOMEC reserves the right to modify features without prior notice in view of continued improvement. 2008 - 2009

Switching devices

IEC 60947-1 & IEC 60947-3 manufacturing standards

Definitions

Switch (IEC 947 -3 & 2.1)

"A mechanical connection device capable of:
- making, carrying and breaking currents under normal circuit conditions (a), possibly including specified operating overload conditions,
- carrying currents in abnormal circuit conditions - such as short-circuit conditions - for a specified duration" (a switch may be able to make short-circuit currents, but it cannot break them).

(a) normal conditions generally correspond to the use of a piece of equipment at an ambient temperature of 40 °C for a period of 8 hours.

Disconnector (IEC 947 -3 & 2.2)

"A mechanical switching device which, when open, complies with the requirements specified for the isolating function. This device can carry currents in normal circuit conditions as well as currents in abnormal conditions for a specified duration."

Disconnector: (working definition) device without on-load making and breaking capacity.

Switch-disconnector (IEC 947 -3 § 2.3)

Switch, which in its breaking position meets the specific insulation conditions for a switch-disconnector.

Fuse switch-disconnector (IEC 947 -3 § 2.9)

Switch-disconnector in which one or more poles include an-in series fuse in a combined device.

DEVICE / ACTIONS			
Marking	(1)		(1)	(1)
Withstanding				
Breaking				(2)

(1) Not imposed by standard (2) By the fuse

Normal current

Overload current

Short-circuit current

Functions

Separation of contacts

As stipulated by the mechanical switching device standard IEC 947 -3, or IEC 364 -5 -537, all disconnection devices must ensure adequate contact separation of contacts.

Testing contact separation capacity as per standard IEC 947 -3 is carried out in three tests:
- the dielectric test will define sparkover resistance (U_{imp}: impulse withstand voltage) dependant on the distance of the air gap between contacts. (Generally U_{imp} = 8 kV for U_e = 400/690 V),
- the measurement of leakage current (I_p) will define insulation resistance in the open position partly depending on the creepage distances. At 110% of U_e, I_p < 0.5 mA (new device) and I_p < 6 mA (device at end of life span),
- checking the strength of the actuator and the position indication device is aimed at validating the "mechanical" reliability of position indications. The device is locked in the "I" position, and a force three times the standard operating force is applied to the operating mechanism.

During the course of this test, locking the device on the "O" position must not be possible, nor should the device remain in the "O" position after the test. This test is not necessary when contact opening is shown by other means than an operating mechanism, such as a mechanical indicator, or direct visibility of contacts, etc.

This third test meets the definition of "**fully visible**" breaking required by the decree of 14 November 1988 to provide the isolation function in low voltage B systems (500 V < U ≤ 1000 V AC and 750 V < U ≤ 1500 V DC).

The latter characteristic is required by NF C 15-100 except for SELV or PELV (U ≤ 50 V AC or 120 V DC).

On-load and overload breaking

This is ensured by devices defined for making and breaking in normal load and overload conditions. Type tests characterise devices able to make and break specific loads. These can have high overload currents under a low cos. φ (a starting motor or a locked rotor).

The type of load or load duty defines the device's **load duty category**.

Breaking action in the event of a short-circuit

A switch is not intended to cut off a short-circuit current. However its dynamic withstand must be such that it withstands the fault until it is eliminated by the corresponding protective device.

On fused switches, the short-circuit is cut off by the fuses (see chapter Fuses page D.44) with the considerable advantage of limiting high fault currents.

This document is not a contract. SOCOMEC reserves the right to modify features without prior notice in view of continued improvement. 2008 - 2009

IEC 60947-1 & IEC 60947-3 manufacturing standards (continued)

Characteristics

Application condition and utilization category, according to standard IEC 947 -3

Table A

UTILIZATION CATEGORY		USE	APPLICATION
AC AC20	DC DC20	Off-load making and breaking	Disconnector(1)
AC21	DC21	Resistive loads including moderate overloads.	Switches at installation head or for resistive circuits (heating, lighting, except discharge lamps, etc.).
AC22	DC22	Inductive and resistive mixed loads including moderate overloads.	Switches in secondary circuits or reactive circuits (capacitor banks, discharge lamps, shunt motors, etc.).
AC23	DC23	Loads made of motors or other highly inductive loads.	Switches feeding one or several motors or inductive circuits (electric carriers, brake magnet, series motor, etc.).

(1) Today these devices are replaced by load break switches for obvious safety of use reasons.

Breaking and making capacities

Unlike circuit breakers, where these criteria indicate tripping or short-circuit making characteristics and perhaps requiring device replacement, switch making and breaking capacities correspond to utilization category maximum performance values.
In such extreme uses, the switch must still maintain its characteristics, in particular its resistance to leakage current and temperature rise.

Table B

	MAKING		BREAKING		N° OF OPERATING CYCLES
	I/I_e	cos φ	I/I_e	cos φ	
AC 21	1.5	0.95	1.5	0.95	5
AC 22	3	0.65	3	0.65	5
AC 23 $I_e \leq 100$ A	10	0.45	8	0.45	5
$I_e > 100$ A	10	0.35	8	0.35	3
		L/R (ms)		L/R (ms)	
DC 21	1.5	1	1.5	1	5
DC 22	4	2.5	4	2.5	5
DC 23	4	15	4	15	5

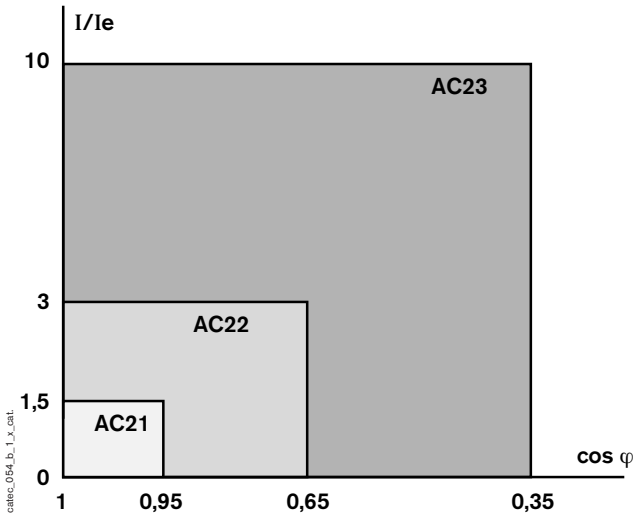

Fig. 1: making and breaking capacities

Electrical and mechanical endurance

This standard establishes the minimum number of electrical (at full load) and mechanical (off-load) operating cycles that must be performed by devices. These characteristics also specify the device's theoretical lifespan during which it must maintain its characteristics, particularly resistance to leakage current and temperature rise.
This performance is linked to the device's use and rating. According to anticipated use, two additional application categories are offered:
- category A: frequent operations (in close proximity to the load)
- category B: infrequent operations (at installation head or wiring system).

Table C

I_e (A)	≤ 100	≤ 315	≤ 630	≤ 2500	> 2500
N° CYCLES/HOUR	120	120	60	20	10
N° OF OPERATIONS IN CAT. A					
without current	8500	7000	4000	2500	1500
with current	1500	1000	1000	500	500
Total	10000	8000	5000	3000	2000
N° OF OPERATIONS IN CAT. B					
without current	1700	1400	800	500	300
with current	300	200	200	100	100
Total	2000	1600	1000	600	400

Operational Current I_e

Operational current is determined by endurance tests (both mechanical and electrical), and by making and breaking capacity tests.

Short circuit characteristics

- Short-time withstand current (I_{cw}): Admissible rms current lasting for 1 second.
- Short circuit making capacity (I_{cm}): peak current value which the device can withstand due to short circuit closure.
- Conditional short circuit current: the rms current the switch can withstand when associated with a protection device limiting both the current and short circuit duration.
- Dynamic withstand: peak current the device can support in a closed position.

The characteristic established by this standard is the short-time withstand current (I_{cw}) from which minimal dynamic withstand is deduced. This essential withstand value corresponds to what the switch can stand without welding.

This document is not a contract. SOCOMEC reserves the right to modify features without prior notice in view of continued improvement. 2008 - 2009

Switching devices

Installation standards IEC 60364 and IEC 60204

Isolating

This function is designed to ensure disconnection of the total or partial installation from the power supply for safety reasons.

The isolating function requires actions as follows:

- **breaking across all live conductors,**
- **assured off-load breaking**, provided additional measures (such as pre-break auxiliary contact, “do no operate on-load” indicator panel, etc.) are in place to ensure that the operational current is not cut on-load. For greater safety, a switching device able to break on-load as well as isolate may be used,
- **contacts separation.**

Switching off for mechanical maintenance

This function is designed to switch off and maintain a machine in the off position in order to carry out mechanical maintenance operations without risk of physical injury, or for longer shutoffs.

The devices should be easily identifiable and used appropriately.

The switching off function for mechanical maintenance requires actions as follows:

- **assured on-load breaking.** Since personnel performing maintenance are not necessarily qualified electricians, circuit breaking should be possible without having to ensure that the load is off, or that the device has the correct application category, etc.,
- **contacts separation.** This action ensures that the device will without fail prevent accidental machine power-on.

This function is also offered by a local safety-breaking enclosure.

In these enclosures, visible breaking switches are generally used where external switch verification is required. Visible breaking is used for greater safety for personnel working in hazardous areas, particularly on sites where mechanical risks are very high, and where a damaged handle would no longer safely indicate the switch position.

Emergency switching

This function ensures disconnection of circuit terminals. The aim of this function is to disconnect loads, thus preventing risk of fire, burns or electric shock. This entails fast easy access and identification of device to be switched.

Fast intervention depends on installation site layout, the equipment being operated, or the personnel present.

The emergency breaking function requires actions as follows:

- **assured on-load breaking,**
- **breaking across all live conductors.**

Emergency stop

This function differs from emergency switching in that it takes into account the risks connected with moving machine parts.

The emergency stop requires actions as follows:

- **assured on-load breaking,**
- **breaking across all live conductors,**
- **possible retention of the supply, for example, for braking of moving parts.**

Functional switching

In terms of practical operation of an electrical installation, it should be possible to operate locally without disconnecting the entire installation. In addition to selective control, functional control also comprises commutation, load shedding etc.

The functional control function requires actions as follows:

- **assured on-load breaking,**
- **breaking across certain live conductors** (e.g. 2 out of 3 phases of a motor).

This document is not a contract. SOCOMEC reserves the right to modify features without prior notice in view of continued improvement. 2008 - 2009

Choosing a switching device

Choice according to neutral arrangement

• Three-phase network with distributed neutral

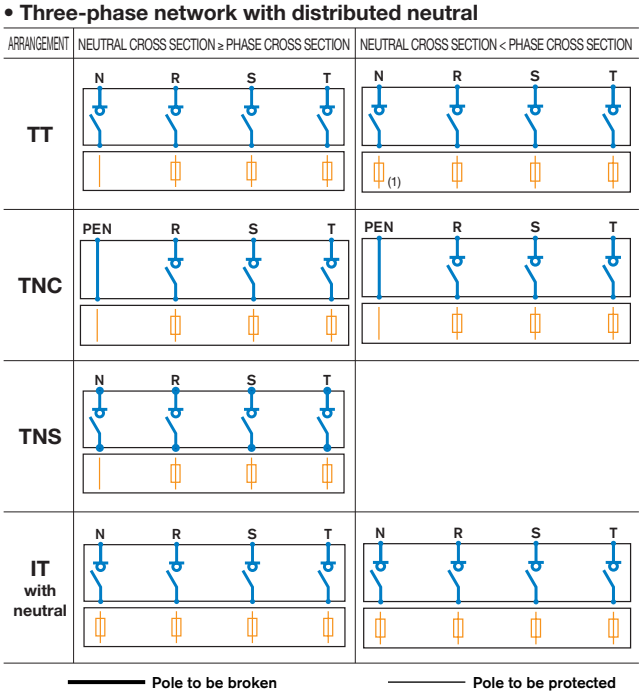

(1) The neutral does not have to be protected if the neutral conductor is protected against short circuits by the phase protection device and if the maximum fault current on the neutral is much lower than the maximum admissible current for the cable (IEC 60364 § 473.3).

Switching devices

Table A

DEVICES	BREAKING visual	BREAKING visible	Changeover switches	Fuse combination unit	Tripping devices	Motorised devices
CMP	•	•			•	optional
SIDERMAT combination	•	•		•	•	
SIDER changeover switch	•	•	•			
SIRCO VM changeover switch	•	•	•			
COMO C	•		•			
IDE	•				•	
SIRCO VM	•	•				
SIRCO	•					optional
SIDER	•	•				optional
SIDER ND	•	•				
SIDERMAT	•	•			•	
SIRCOVER	•		•			
ATyS	•		•			•
FUSERBLOC	•			•		
FUSOMAT	•	•*		•	•	

** Except for 1250 A rating.*

Application types in a DC network

The operational current characteristics indicated in the general catalogue are defined for fig. 2, except where “2-pole in series” is specified. In this case see fig. 3.

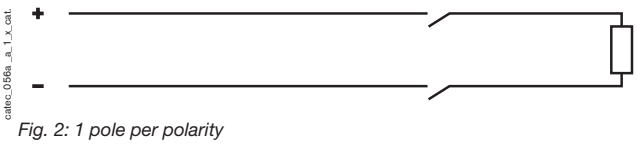

Fig. 2: 1 pole per polarity

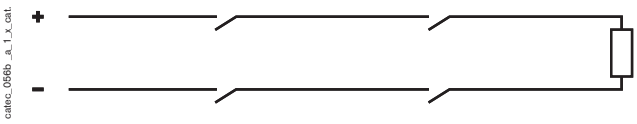

Fig. 3: 2 poles in series per polarity

Example 1: poles in series
A 400 A SIRCO device, used in a 500 V DC network with a 400 A operational current in DC 23 category, must have 2 poles in series per polarity.

Example 2: poles in parallel connecting precaution: ensure correct current distribution in both branches.

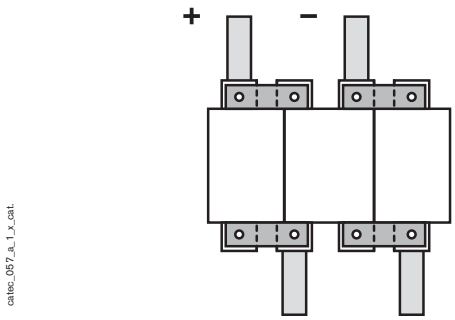

Fig. 4: poles in parallel

This document is not a contract. SOCOMEC reserves the right to modify features without prior notice in view of continued improvement. 2008 - 2009

Switching devices

Uses

Protection

Circuit breaking time must be taken into account when using SIDERMAT or FUSOMAT tripping devices to protect against indirect contact and short circuits. The time between operation and effective contact breaking is less than 0.05 sec.

Power supply change over

The 0-I or 0-II operation time is 0.7 to 2.1 s depending on the devices. The I - II switching time is 1.1 to 3.6 s.
(see details in chapter Motorised SIRCOVER).

Upstream of capacitor bank

Choose a switch rating 1.5 times higher than the nominal current value of the capacitor bank (Ic).

$$I_{th} > 1.5\ Ic$$

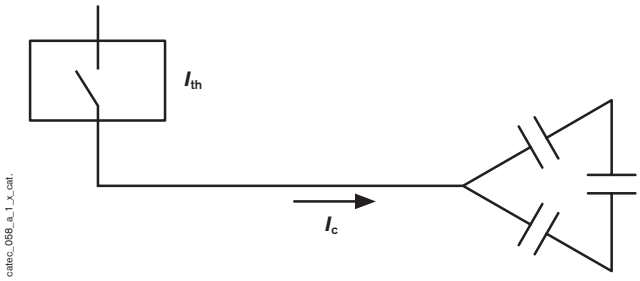

Fig. 1: switch upstream of capacitors

At transformer primary

Ensure that the switch making capacity is greater than the no-load current of the transformer.

$$\text{Making capacity} > I_d$$

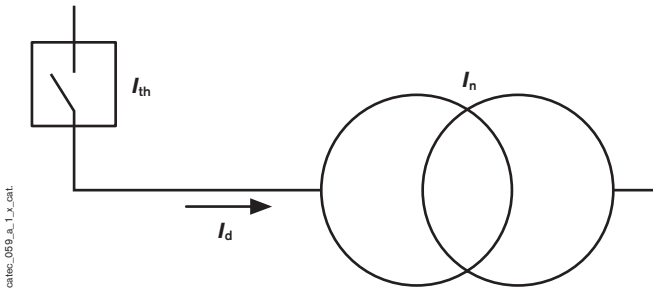

Fig. 2: switch at transformer primary

Table A

P kVA	50	100	160	250	400	630	1000	1250	1600
I_d / I_n	15	14.5	14	13	12	11	10	9	8.5

I_d: transformer no-load current
I_n: transformer nominal current

Upstream of motor

- For local security switching, the switch must be rated at AC23 to the nominal current (I_n) of the motor.
- In frequent start-up motor circuits, calculating the equivalent thermal current (I_{thq}) is necessary.

Currents and start-up times vary widely according to motor inertia. For direct start-up they are generally between the following values:
- peak current: 8 to 10 I_n
- duration of peak current: 20 to 30 ms
- start-up current I_d: 4 to 8 I_n
- start-up time t_d: 2 to 4 sec.

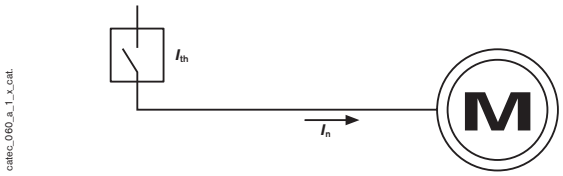

Fig. 3: switch upstream of motor

Examples of de-rating according to start-up type.

$$I_{thq} = I_n \times Kd \text{ and } I_{th} \geq I_{thq}$$

Table B

START UP TYPE	$\frac{I_d}{I_n}$ (4)	td (4) (s)	n (1)	Kd (2)
direct up to 170 kW	6 to 8	0.5 to 4	n > 10	$\frac{\sqrt{n}}{3.16}$
Y - Δ (Id/3)	2 to 2.5	3 to 6	n > 85	$\frac{\sqrt{n}}{9.2}$
direct - high inertia motors (3)	6 to 8	6 to 10	n > 2	$\frac{\sqrt{n}}{1.4}$

(1) n: number of start-ups per hour for which de-rating is required.
(2) Kd: start-up factor ≥ 1
(3) fans, pumps, etc.
(4) average values very variable according to type of motor and receiver

- In cases of cyclic overloads (excluding start-ups). For specific machines (welding machines, motors), and generators ith a peak cyclic current, the calculation of equivalent current (I_{thq}) is as follows:

$$I_{thq} = \sqrt{\frac{(I^2_1 \times t1) + (I^2_2 \times t2) + I_n^2 \times (tc - [t1 + t2])}{tc}}$$

I_1: overload current
I_2: possible intermediate overload
I_n: nominal operating current
t_1 and t_2: respective duration in seconds of currents I_1 and I_2
tc: cycle duration in seconds with lower limit set at 30 seconds

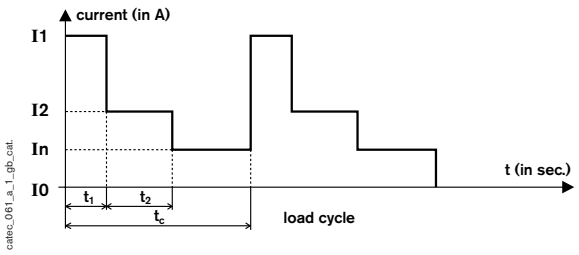

Fig. 4: cyclic overload

This document is not a contract. SOCOMEC reserves the right to modify features without prior notice in view of continued improvement. 2008 - 2009

Correction factor

Certain operating conditions necessitate modification of thermal current using a correction factor.

Kt correction due to ambient air temperature

Ambient air temperature surrounding the device
- Simplified method.

$$I_{thu} \leq I_{th} \times Kt$$

Table A: correction factors according to ambient air temperature ta

Kt: correction factor	
0.9	40 °C < ta ≤ 50 °C
0.8	50 °C < ta ≤ 60 °C
0.7	60 °C < ta ≤ 70 °C

- A more accurate calculation can be made for each application: please consult us.

Use with fuse combination unit
- Simplified method:
  A switch must be de-rated by a factor of 0.8 when fuse bases are directly connected to its terminals.
  Example: A 1250 A fuse set will consist of a 1600 A switch and 3 1250 A gG fuses
- A more accurate calculation can be made for each application: please consult us.

Other de-rating due to temperature
- Switch fuses fitted with high speed fuses.
- In certain cases, de-rating is necessary for 24-hour full-load operation: please consult us.

Kf correction due to frequency

$$I_{thu} \leq I_{th} \times Kf$$

Table B: correction factors according to frequency f

Kf: correction factor	
0.9	100 Hz < *f* ≤ 1000 Hz
0.8	1000 Hz < *f* ≤ 2000 Hz
0.7	2000 Hz < *f* ≤ 6000 Hz
0.6	6000 Hz < *f* ≤ 10000 Hz

Ka correction factor due to altitude

- No de-rating of I_{th}.
- U_e and I_e de-rating in both AC and DC currents.

Table C: correction factors according to altitude A

	2000 m < A ≤ 3000 m	3000 m < A ≤ 4000 m
U_e	0.95	0.80
I_e	0.85	0.85

Kp correction due to device position

Switches connection
As the entire SOCOMEC range of switches have a double breaking system per pole, the power source can be connected to the top or bottom of the device, except in those cases where regulations of identification stipulate power supply from below.

Kp correction due to device position

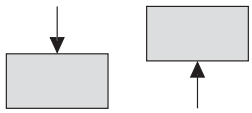

Fig. 1: direction of supply

Switch mounting and orientation

$$I_{thu} \leq I_{th} \times Kp$$

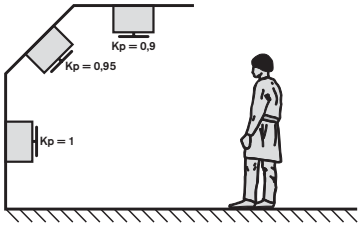

Fig. 2: position de-rating

Rotation of each device layout is limited either to clockwise or anti-clockwise in order to ensure that switching characteristics remain independant from the speed of operation.

Table D

			90° anti-clockwise	180°	90° clockwise
COMO M, COMO I, IDE, CMP, COMO C			YES	YES	YES
SIRCO VM	VM0, VM2	32 ... 40; 125 ... 160	YES	YES	YES
	VM1	63 ... 125	YES	YES	NO
SIRCO	3/4 pole	40 ... 3200 A	NO	YES	YES
		4000 A	YES	YES	NO
	6/8 pole	125 ... 630 A	YES	YES	NO
		800 ... 3200 A	NO	YES	YES
SIRCO UL		V 60 ... V 400 A	YES	YES	YES
SIDER		50 ... 1600 A	NO	YES	YES
		ND125 ... ND 500 A	YES	YES	YES
SIDERMAT	Shunt trip coil	250 ... 1800A	YES	YES	NO
	Undervoltage trip coil	250 ... 1800 A	NO	YES	YES
SIRCO VM1 changeover switches	I - 0 - II / I - I+II - II		YES	YES	NO
SIRCOVER	I - 0 - II	125 ... 630 A	NO	YES	YES
		800 ... 3200 A	YES	YES	NO
	I - I+II - II	125 ... 3200 A	NO	YES	YES
	6/8 pole	125 ... 630 A	NO	YES	NO
SIRCOVER BY-PASS	I - 0 - II	125 ... 630 A	NO	YES	YES
		800 ... 3200 A	YES	YES	NO
	I - I+II - II	125 ... 630 A	NO	YES	YES
		800 ... 3200 A	NO	YES	YES
SIDER changeover switches	40 ... 80 A		NO	YES	NO
Motorised SIRCOVER VS	I - 0 - II	125 ... 1600 A	YES	YES	NO
	I - I+II - II	125 ... 1600 A	NO	YES	YES
Motorised SIRCOVER VE	I - 0 - II	250 ... 3150 A	YES	YES	NO
	I - I+II - II	250 ... 3150 A	NO	YES	YES
ATyS	I - 0 - II / I - I+II - II	125 ... 630 A	NO	YES	YES
FUSERBLOC		CD 25 ... 1250 A	YES	YES	YES
FUSOMAT	Shunt trip coil	250 ... 1250 A	YES	YES	NO
	Undervoltage trip coil	250 ... 1250 A	NO	YES	YES

This document is not a contract. SOCOMEC reserves the right to modify features without prior notice in view of continued improvement. 2008 - 2009

UL and NEMA specifications

General information about motor protection

Typical construction of a motor starter

catec_222_a_gb_cat

Essential parts of a motor branch circuit required by the national electrical code

- Disconnect means.
- Branch-circuit short-circuit protective device.
- Motor-controller.
- Motor overload protective devices.

Disconnect means

The disconnect means can be a manual disconnect switch according to UL 98.

A manual motor controller (according to UL 508) additionally marked “suitable as motor disconnect” is only permitted as a disconnecting means where installed between the final branch-circuit short-circuit and ground-fault protective device and the motor (NEC 2002 Article 430.109).

Branch-circuit short-circuit protective device

The short-circuit protective device can be either a fuse or an inverse-time circuit-breaker.

Motor-controller

Any switch or device that is normally used to start and stop a motor according to the National Electrical Code article 430.81.

Motor overload protective devices

The national electrical code permits fuses to be used as the sole means of overload protection for motor branch circuits. This approach is often practical only with small single phase motors.

Most integral horsepower 3 phase motors are controlled by a motor starter which includes an overload relay. Since the overload relay provides overload protection for the motor branch circuit, the fuses may be sized for short-circuit protection.

This document is not a contract. SOCOMEC reserves the right to modify features without prior notice in view of continued improvement. 2008 - 2009

General information about motor protection (continued)

Wire size cross reference

AWG	mm²	KCMIL/MCM	mm²
14	2.1	250	127
12	3.3	300	152
10	5.3	350	177
8	8.4	400	203
6	13.3	500	253
4	21.2	600	304
3	26.7	700	355
2	33.6	750	380
1	42.4	800	405
1/0	53.5	900	456
2/0	67.4	1000	507
3/0	85.0	1250	633
4/0	107.2	1500	760
		1750	887
		2000	1014

New NFPA 79 requirements and solutions

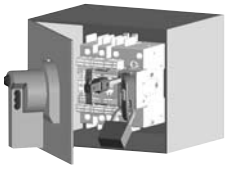

As defined in the NFPA 79 Standard section 5.3.3.1 and 6.2.3.1.2, our disconnecting devices fully comply with all of the following requirements:

1. Isolate the electrical equipment from the supply circuit and have one off (open) and one on (closed) position only.
2. Have an external operating means (e.g., handle).
3. Be provided with a permanent means permitting it to be locked in the off (open) position only (e.g., by padlocks) independent of the door position. When so locked, remote as well as local closing is be prevented.
4. Be operable, by qualified persons, independent of the door position without the use of accessory tools or devices.

However the closing of the disconnecting means while door is open is not permitted unless an interlock is operated by deliberate action.

Flange and side operation:

Our flange operated and side operated switches meet the requirements of the NFPA 79 without any additional parts being added.

Nema ratings and IP cross-reference

NEMA TYPE	INTENDED USE AND DESCRIPTION	NEMA RATINGS AND IP CROSS-REFERENCE
1	Indoor use primarily to provide a degree of protection against contact with the enclosed equipment and against a limited amount of falling dirt	NEMA 1 meets or exceeds IP10
2	Indoor use to provide a degree of protection against a limited amount of falling water and dirt	NEMA 2 meets or exceeds IP11
3	Intended for outdoor use primarily to provide a degree of protection against rain, sleet, windblown dust, and damage from external ice formation.	NEMA 3 meets or exceeds IP54
3R	Intended for outdoor use primarily to provide a degree of protection against rain, sleet, and damage from external ice formation.	NEMA 3R meets or exceeds IP14
3S	Intended for outdoor use primarily to provide a degree of protection against rain, sleet, windblown dust, and to provide for operation of external mechanisms when ice laden.	NEMA 3S meets or exceeds IP54
4	Intended for indoor or outdoor use primarily to provide a degree of protection against windblown dust and rain, splashing water, hose-directed water, and damage from external ice formation.	NEMA 4 meets or exceeds IP56
4X	Intended for indoor or outdoor use primarily to provide a degree of protection against corrosion, windblown dust and rain, splashing water, hose-directed water, and damage from ice formation.	NEMA 4X meets or exceeds IP56
6	Intended for indoor or outdoor use primarily to provide a degree of protection against hose-directed water, the entry of water during occasional temporary submersion at a limited depth, and damage from external ice formation.	NEMA 6 meets or exceeds IP67
6P	Intended for indoor or outdoor use primarily to provide a degree of protection against hose-directed water, the entry of water during prolonged submersion at a limited depth, and damage from external ice formation.	NEMA 6P meets or exceeds IP67
12	Intended for indoor use primarily to provide a degree of protection against circulating dust, falling dirt, and dripping non-corrosive liquids.	NEMA 12 meets or exceeds IP52
12K	Type 12 with knockouts.	NEMA 12K meets or exceeds IP52

This table provides a guide for converting from NEMA enclosure type numbers to IP ratings. The NEMA types meet or exceed the test requirements for the associated european classifications; for this reason the table should not be used to convert "from IP rating to NEMA" and the "NEMA to IP rating" should be verified by test.

This document is not a contract. SOCOMEC reserves the right to modify features without prior notice in view of continued improvement. 2008 - 2009

UL and NEMA specifications

Fusible disconnect switches' association chart with UL fuses
(according to typical motor acceleration times)

Three phase motor fuse and fusible disconnect switch selection UL class CC

MOTOR HP	FULL LOAD AMPERES	RECOMMENDED FUSE AMPERE RATING FOR TYPICAL* 5 SECS. MOTOR ACCELERATION TIMES	RECOMMENDED FUSIBLE DISCONNECT SWITCH	
208 V		AMPERE RATING (A)	AMPERE RATING (A)	REFERENCE
1/2	2.4	8	30	3710 **3003** 3712 **3003** 3712 **6003** 3716 **3003** 3716 **6003**
3/4	3.5	10		
1	4.6	15		
1-1/2	6.6	20		
2	7.5	20		
3	10.6	30		
240 V		AMPERE RATING (A)	AMPERE RATING (A)	REFERENCE
1/2	2.2	7	30	3710 **3003** 3712 **3003** 3712 **6003** 3716 **3003** 3716 **6003**
3/4	3.2	10		
1	4.2	12		
1-1/2	6	17-1/2		
2	6.8	20		
3	9.6	30		
480 V		AMPERE RATING (A)	AMPERE RATING (A)	REFERENCE
1/2	1.1	3-1/2	30	3710 **3003** 3712 **3003** 3712 **6003** 3716 **3003** 3716 **6003**
3/4	1.6	5		
1	2.1	6-1/4		
1-1/2	3	9		
2	3.4	10		
3	4.8	15		
5	7.6	25		
7-1/2	11	30		
600 V		AMPERE RATING (A)	AMPERE RATING (A)	REFERENCE
1/2	0.9	2-8/10	30	3710 **3003** 3712 **3003** 3712 **6003** 3716 **3003** 3716 **6003**
3/4	1.3	4		
1	1.7	5-6/10		
1-1/2	2.4	8		
2	2.7	8		
3	3.9	12		
5	6.1	17-1/2		
7-1/2	9	30		
10	11	30		

Three phase motor fuse and fusible disconnect switch selection UL class J

MOTOR HP	FULL LOAD AMPERES	RECOMMENDED FUSE AMPERE RATING FOR TYPICAL* 5 SECS. MOTOR ACCELERATION TIMES	RECOMMENDED FUSIBLE DISCONNECT SWITCH	
208 V		AMPERE RATING (A)	AMPERE RATING (A)	REFERENCE
1/2	2.4	3-1/2	30	3710 **3004** 3712 **3004** 3712 **6004** 3716 **3004** 3716 **6004**
3/4	3.5	5		
1	4.6	7		
1-1/2	6.6	10		
2	7.5	10		
3	10.6	15		
5	16.7	25		
7-1/2	24.2	35	60	3716 **3006** 3712 **6006**
10	30.8	45		3716 **3006** 3716 **6006**
15	46.2	70	100	3712 **3010** 3712 **6010**
20	60	90		3716 **3010** 3716 **6010**
25	75	110	200	3712 **3020** 3712 **6020**
30	88	150		3716 **3020** 3716 **6020**
40	114	175		
50	143	225	400	3712 **3040** 3712 **6040**
60	169	250		3716 **3040** 3716 **6040**
75	211	350		
100	273	400		
125	343	500	600	3712 **3060** 3712 **6060**
150	396	600		

** Typical: suggested for most applications. Will coordinate with NEMA class 20 overload relays. Suitable for motor acceleration times up to 5 seconds.*

This document is not a contract. SOCOMEC reserves the right to modify features without prior notice in view of continued improvement. 2008 - 2009

Fusible disconnect switches' association chart with UL fuses

(according to typical motor acceleration times)

Three phase motor fuse and fusible disconnect switch selection UL class J

MOTOR HP	FULL LOAD AMPERES	RECOMMENDED FUSE AMPERE RATING FOR TYPICAL* 5 SECS. MOTOR ACCELERATION TIMES	RECOMMENDED FUSIBLE DISCONNECT SWITCH	
240 V		AMPERE RATING (A)	AMPERE RATING (A)	REFERENCE
1/2	2.2	3-1/2	30	3710 **3004** 3712 **3004** 3712 **6004** 3716 **3004** 3716 **6004**
3/4	3.2	5		
1	4.2	6-1/4		
1-1/2	6	9		
2	6.8	10		
3	9.6	15		
5	15.2	25		
7-1/2	22	35	60	3716 **3006** 3712 **6006** 3716 **3006** 3716 **6006**
10	28	40		
15	42	60	100	
20	54	80		3712 **3010** 3712 **6010** 3716 **3010** 3716 **6010**
25	68	100		
30	80	125	200	3712 **3020** 3712 **6020** 3716 **3020** 3716 **6020**
40	104	150		
50	130	200		
60	154	225	400	3712 **3040** 3712 **6040** 3716 **3040** 3716 **6040**
75	192	300		
100	248	350		
125	312	450	600	3712 **3060** 3712 **6060**
150	360	500		
480 V		AMPERE RATING (A)	AMPERE RATING (A)	REFERENCE
1/2	1.1	1-6/10	30	3710 **3004** 3712 **3004** 3712 **6004** 3716 **3004** 3716 **6004**
3/4	1.6	2-1/4		
1	2.1	3-2/10		
1-1/2	3	4-1/2		
2	3.4	5		
3	4.8	8		
5	7.6	12		
7-1/2	11	17-1/2		
10	14	20		
15	21	30		
20	27	40	60	3716 **3006** 3712 **6006** 3716 **3006** 3716 **6006**
25	34	50		
30	40	60		
40	52	80	100	3712 **3010** 3712 **6010** 3716 **3010** 3716 **6010**
50	65	100		
60	77	125	200	3712 **3020** 3712 **6020** 3716 **3020** 3716 **6020**
75	96	150		
100	124	200		
125	156	225	400	3712 **3040** 3712 **6040** 3716 **3040** 3716 **6040**
150	180	250		
200	240	350		
250	302	450	600	3712 **3060** 3712 **6060**
300	361	600		
600 V		AMPERE RATING (A)	AMPERE RATING (A)	REFERENCE
1/2	0.9	1-1/2	30	3710 **3004** 3712 **3004** 3712 **6004** 3716 **3004** 3716 **6004**
3/4	1.3	2		
1	1.7	2-1/2		
1-1/2	2.4	3-1/2		
2	2.7	4		
3	3.9	6		
5	6.1	10		
7-1/2	9	15		
10	11	17-1/2		
15	17	25		
20	22	35	60	3716 **3006** 3712 **6006** 3716 **3006** 3716 **6006**
25	27	40		
30	32	50		
40	41	60		
50	52	80	100	3712 **3010** 3712 **6010** 3716 **3010** 3716 **6010**
60	62	90		
75	77	125	200	3712 **3020** 3712 **6020** 3716 **3020** 3716 **6020**
100	99	150		
125	125	200		
150	144	225	400	3712 **3040** 3712 **6040** 3716 **3040** 3716 **6040**
200	192	300		
250	240	350		
300	289	450	600	3712 **3060** 3712 **6060**

** Typical: suggested for most applications. Will coordinate with NEMA class 20 overload relays. Suitable for motor acceleration times up to 5 seconds.*

This document is not a contract. SOCOMEC reserves the right to modify features without prior notice in view of continued improvement. 2008 - 2009

General characteristics

Introduction

Fuses are designed to break an electric circuit in cases of abnormal currents. They also have the added advantage of being able to limit high current faults (see example below).
The fuse's essential characteristics are its reliability in terms of protection, its simplicity and its economical price.
Optimising fuse choice depends on the fuse's technical features as follows:

- **pre-arcing time**
  This is the time necessary for the current to bring the fuse element to vaporisation point before melting.
  Pre-arcing time is independent from network voltage.
- **arcing time**
  This is defined as the period between the instant of arc appearance and its total extinction (zero current). Arc time depends on network voltage, but is negligible compared to pre-arcing time for total melting time > 40 ms.
- **operation time**
  This is the sum of pre-arcing and arcing times.
- **breaking capacity**
  This is the prospective short circuit current value that the fuse can blow under a specified operational voltage.
- **joule integral,** $\int_0^t I^2 dt$

This is the integral value of the current cut during total melting time, expressed as A^2s (Amps squared seconds).

Short-circuit current cut-off

The two parameters to be considered for short-circuit current cut-off are:

- the true current peak reached in the protected circuit,
- the prospective rms current that would develop in the absence of fuses in the circuit.

Note: There is only one cut-off if $t_{pre\text{-}arcing} < 5$ ms (50 Hz network).

The cut-off current diagram indicates the correspondence between these two parameters (see pages D.47 and D.49).

The following actions should be performed to know peak current (which can increase in fuse-protected electric circuits):

- calculate maximum rms short-circuit current (see page D.21),
- plot this current value on the cut-off current diagram, and read off peak value according to the fuse rating protecting the circuit.

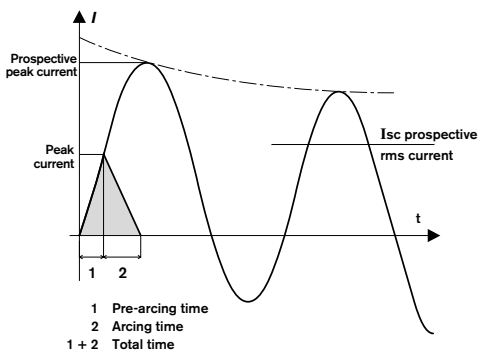

catec_036_a_1_gb_cat.

Fig. 1: short-circuit current cut-off

Short-circuit current cut-off (continued)

Example:
A symmetric 100 kA rms short-circuit current cut-off with 630 A gG fuse is required.

The prospective 100 kA rms current results in a prospective peak current as follows: 100 x 2.2 = 220 kA

The fuse cuts-off peak current at 50 kA (see fig. 2), representing 35% of its prospective value (see fig. 2) leading to a reduction of 13% of unprotected value in electrodynamic forces (see fig. 3), and a reduction in I^2t limited to 2.1% of its value (see fig. 4).

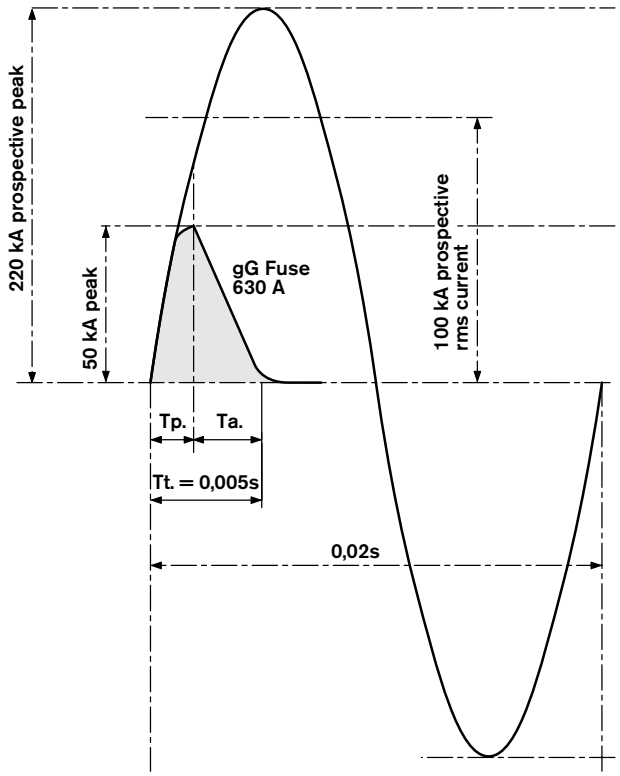

catec_037_a_1_gb_cat.

Fig. 2: cut-off peak current

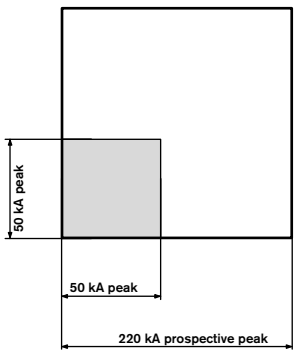

catec_038_a_1_gb_cat.

Fig. 3: limiting electrodynamic forces proportional to squared current

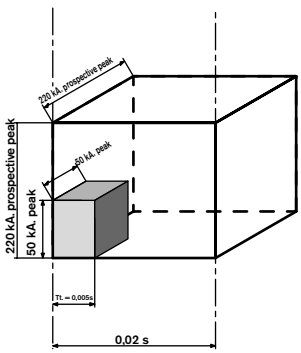

catec_039_a_1_gb_cat.

Fig. 4: limiting I_2t I x I x t

This document is not a contract. SOCOMEC reserves the right to modify features without prior notice in view of continued improvement. 2008 - 2009

Choosing "gG" and "aM" fuses

Three parameters should be taken into account when selecting a protection system:
- network characteristics,
- installation specifications,
- the circuit characteristics in question.

The calculations given hereafter are for information purposes only. Please contact us for equipment requiring special applications.

Network characteristics

Voltage
A fuse can never be used with an rms voltage above its rated voltage. It operates normally at lower voltages.

Frequency
- **f < 5 Hz:** the operational voltage (U_e) is considered equivalent to DC voltage and U_e = U peak
- **5 ≤ f < 48 Hz:**

$$U_e \leq ku \times U_n$$

f (in Hz)	5	10	20	30	40
ku	0.55	0.65	0.78	0.87	0.94

ku: voltage de-rating coefficient due to frequency.
- **48 ≤ f < 1000 Hz:** no voltage de-rating.

Short circuit current
Once established, its values must be checked to ensure they are less than the fuses' breaking capacity:
- 100 kA rms for sizes 14 x 51, 22 x 58, T00, T0, T1, T2, T3, T4, T4A,
- 50 kA rms for sizes 10.3 x 38.

Installation specifications

Earthing arrangements
Fuses have one or two protection functions according to the neutral load:
- against overcurrents: A,
- against indirect contact: B.

ARRANGEMENT	PROTECTION
TT	A
IT	A + B
TNC	A + B
TNS	A + B

Circuit features

Fuse use is limited according to ambient temperature (ta) surrounding the device.

$$I_{th}\,u \leq I_n \times Kt$$

I_{th} u: operating thermal current: maximum permanent current accepted by the device for 8 hours in specific conditions
I_n: fuse rated current
Kt: coefficient given in table below

Kt				
	gG fuse		aM Fuse	
ta	FUSE BASE	EQUIPMENT AND COMBINATION	FUSE BASE	EQUIPMENT AND COMBINATION
40 °	1	1	1	1
45 °	1	0.95	1	1
50 °	0.93	0.90	0.95	0.95
55 °	0.90	0.86	0.93	0.90
60 °	0.86	0.83	0.90	0.86
65 °	0.83	0.79	0.86	0.83
70 °	0.80	0.76	0.84	0.80

If the fuse is installed in a ventilated enclosure Kt and Kv values must be multiplied.
- Air speed V < 5 m/sec. Kv = 1 + 0.05 V
- Air speed V ≥ 5 m/sec. Kv = 1.25

Example: A gG fuse is mounted in a base within a ventilated enclosure
- temperature in the enclosure: 60 °C,
- air speed: 2 m/sec.

Kv = 1 + 0.05 x 2 = 1.1
Kt = 1.1 x 0.86 = 0.95.

This document is not a contract. SOCOMEC reserves the right to modify features without prior notice in view of continued improvement. 2008 - 2009

Choosing "gG" and "aM" fuses (continued)

Circuit features (continued)

Precautions for use at altitudes > 2000 m
- No current de-rating.
- Breaking capacity is limited: please consult us.
- Size de-rating is recommended.

Upstream of isolating transformer
Switching on an off-load transformer triggers a large current inrush. An aM fuse will be needed at primary coil which is able to withstand repeated overload. The secondary will be protected by gG fuses.

Upstream of motor
Motor protection is usually ensured by thermal relay. The protection of motor power supply conductors is ensured by aM or gG fuses. Table A shows fuse ratings to be linked to thermal relay according to motor power.

Note:
- Motor nominal current varies from one manufacturer to another. Table A shows standard values.
- aM fuses are preferred to gG fuses for this application.
- In cases of frequent or heavy start-up (direct start-up > 7 I_n for more than 2 seconds or start-up > 4 I_n for more than 10 seconds), it is recommended to select a bigger size than that indicated in the table. It will nevertheless be necessary to check to co-ordination of selectivity between the fuse and the circuit breaker (see page D.52).
- In cases of aM fuse melting, replacing the fuses all three phases is advised.

Table A: protecting motors with aM fuses

MOTOR								
400 V tri			500 V tri			RA-TINGS	RECOM-MENDED SIZE	ASSOCIATED FUSE SWITCH RECOMMENDED SIZE
Kw	Ch	In A	Kw	Ch	In A			
7.5	10	15.5	**11**	15	18.4	20	10 x 38 or 14 x 51	FUSERBLOC 32 A CD
11	15	22	**15**	20	23	25	10 x 38 or 14 x 51	
15	20	30	**18.5**	25	28.5	40	14 x 51	FUSERBLOC 50 A
18.5	25	37	**25**	34	39.4	40	14 x 51	
22	30	44	**30**	40	45	63	22 x 58	FUSERBLOC 100 A or 125 A
25	34	51	**40**	54	60	63	22 x 58	
30	40	60	**45**	60	65	80	22 x 58	
37	50	72	**51**	70	75	100	22 x 58	
45	60	85	**63**	109	89	100	22 x 58	
55	75	105	**80**	110	112	125	T 00	FUSERBLOC 160 A
75	100	138	**110**	150	156	160	T 0	
90	125	170	**132**	180	187	200	T 1	FUSERBLOC 250 A
110	150	205	**160**	220	220	250	T 1	
132	180	245	**220**	300	310	315	T 2	FUSERBLOC 400 A
160	218	300				315	T 2	
200	270	370	**250**	340	360	400	T 2	
250	340	475	**335**	450	472	500	T 3	FUSERBLOC 630 A
315	430	584	**450**	610	608	630	T 3	
400	550	750	**500**	680	680	800	T 4	FUSERBLOC 1250 A

Upstream of capacitor bank
Fuse rating must be greater than, or equal to, twice the nominal current of the capacitor bank.

$$I_n \geq 2\ Ic$$

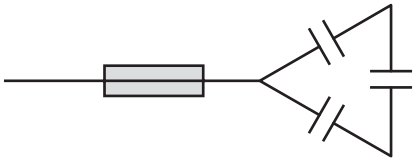

Table B: fuse rating for 400 V capacitor bank

Capacity in kvar	5	10	20	30	40	50	60
gG fuse in A	20	32	63	80	125	160	200

Capacity in kvar	75	100	125	150
gG fuse in A	200	250	400	400

Connecting fuses in parallel
Connecting fuses in parallel is only possible between two fuses of the same size and rating.

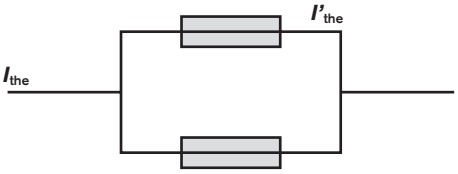

$$I_{the} = I'_{the} \times 2$$

Total limited peak I_{sc} = limited peak I'_{sc} x 1.59

Total A^2t = A'^2t x 2.52

I^2t: temperature stress.

Use in DC

DC pre-arcing time is identical to AC pre-arcing time. Time/current characteristics and the cut-off current remain valid for the use of fuses in AC. On the other hand, arcing time is much higher in DC because there is no return to 0 voltage

MAXIMUM VOLTAGE	
In AC	In DC
400 V	260 V
500 V	350 V
690 V	450 V

Employing bigger fuses than usual is recommended, whereas the rating remains the same; sizes 10 x 38 and 14 x 51 being reserved for circuits ≤ 12 A.
For highly inductive circuits, placing two fuses in series on the + pole is recommended.
It is not possible to use aM fuses in DC.

This document is not a contract. SOCOMEC reserves the right to modify features without prior notice in view of continued improvement. 2008 - 2009

Curves characteristic of “gG” fuses

Cut-off current diagram

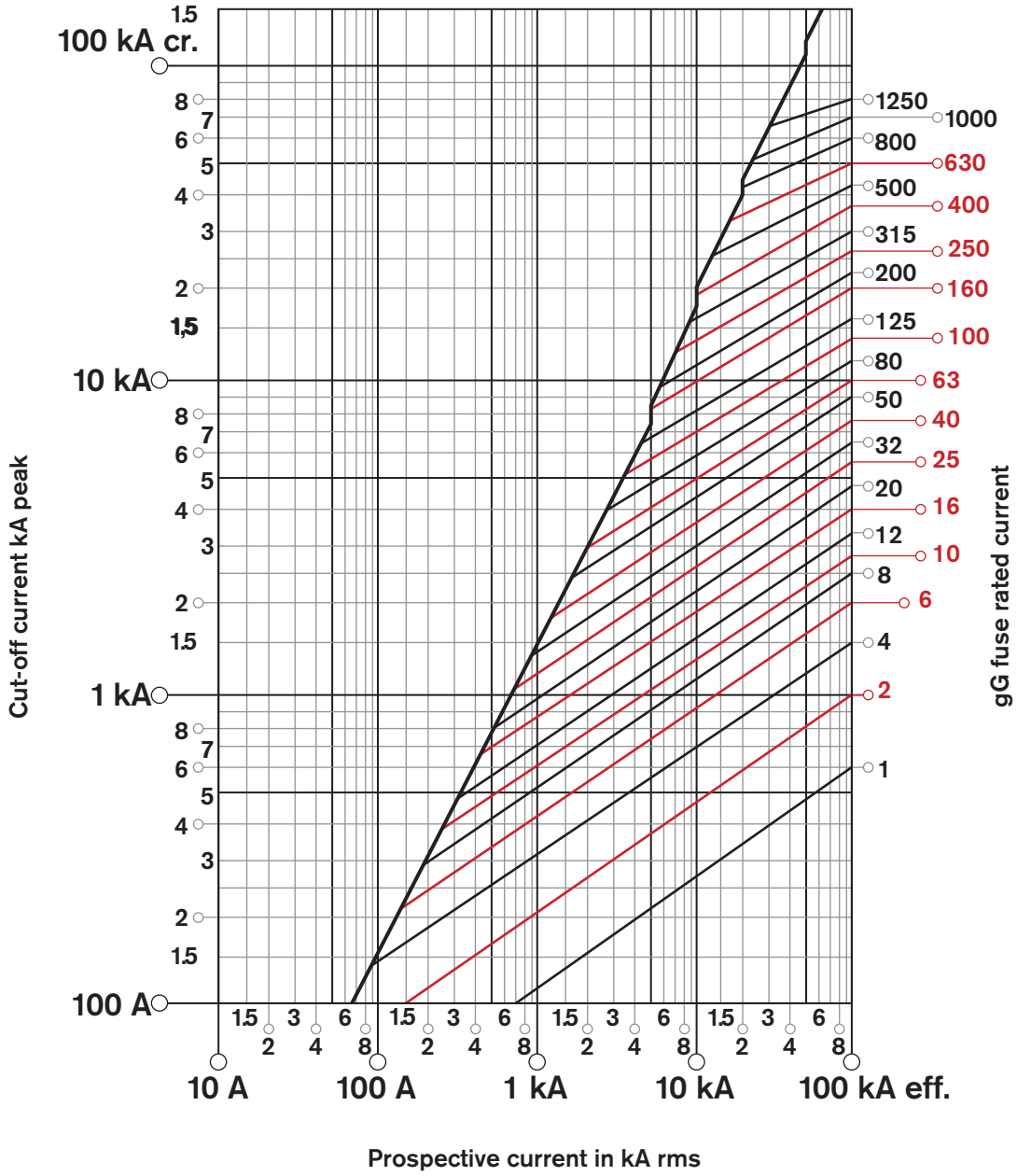

cattec_112_e_1_gb_cat.

This document is not a contract. SOCOMEC reserves the right to modify features without prior notice in view of continued improvement. 2008 - 2009

Fuses

Curves characteristic of “gG” fuses (continued)

Diagram of thermal constraint limitation

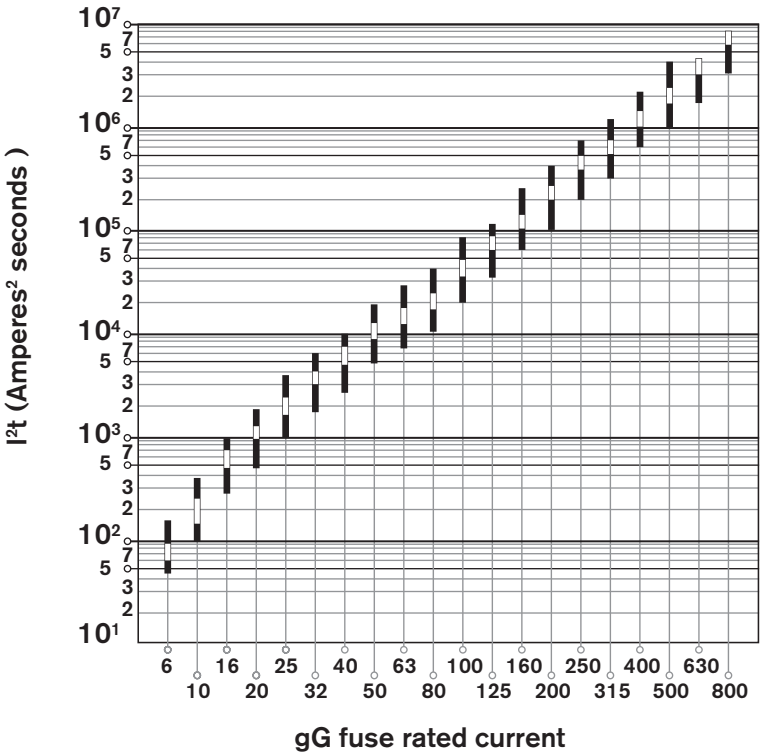

catec_225_a_1_gb_cat

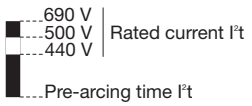

catec_227_a_1_gb_cat

Time/current operation characteristics (IEC or BS standard)

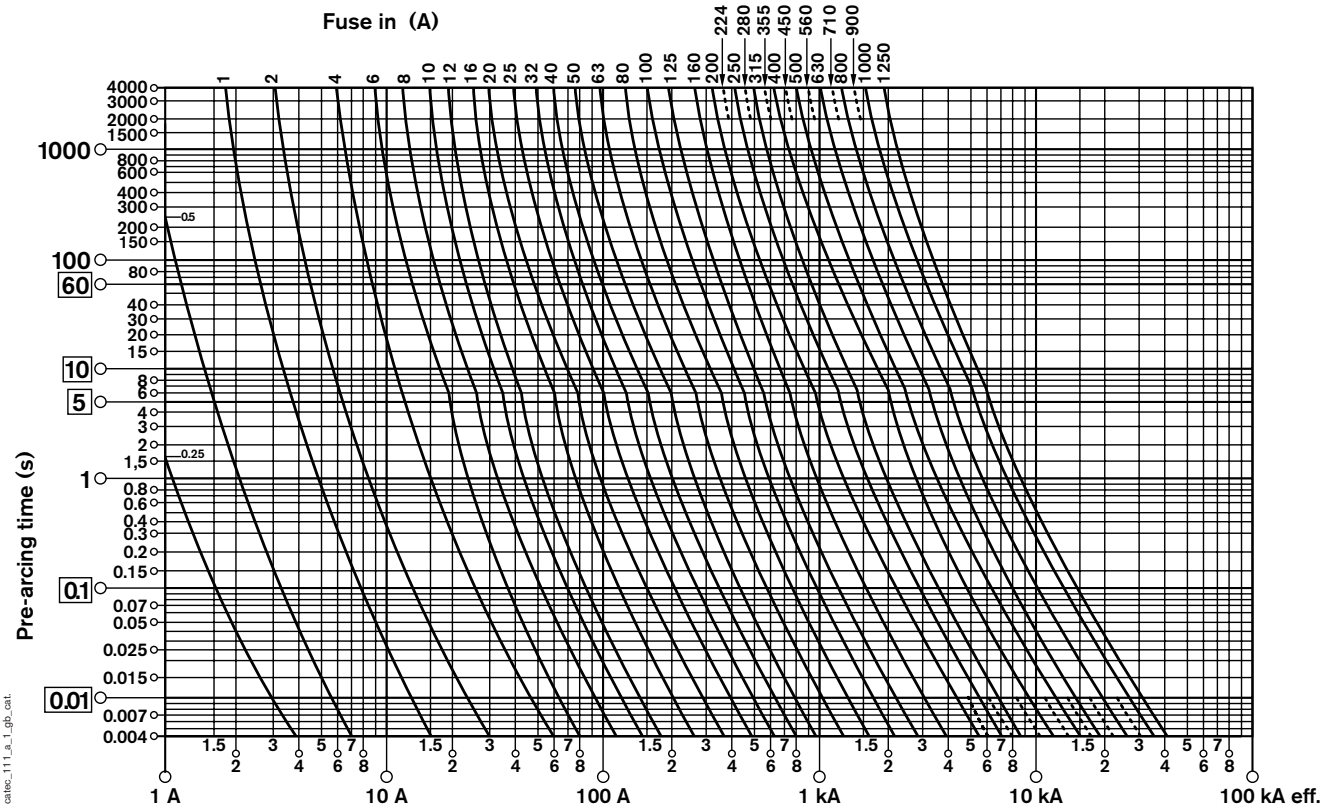

catec_111_a_1_gb_cat.

This document is not a contract. SOCOMEC reserves the right to modify features without prior notice in view of continued improvement. 2008 - 2009

Curves characteristic of “aM” fuses

Current cut-off diagram

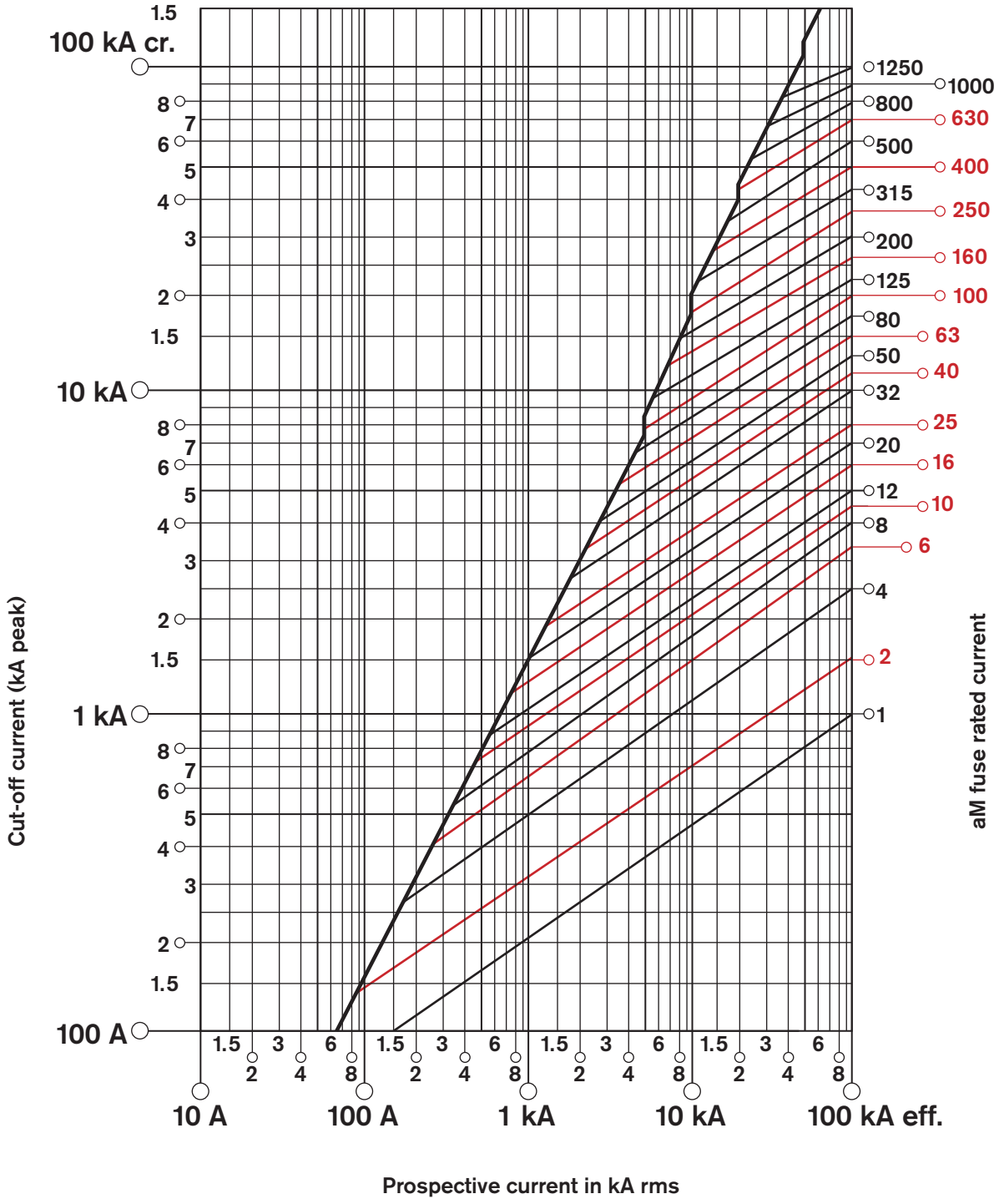

catec_114_d_1_gb_cat.

This document is not a contract. SOCOMEC reserves the right to modify features without prior notice in view of continued improvement. 2008 - 2009

Curves characteristic of “aM” fuses (continued)

Diagram of thermal constraint limitation

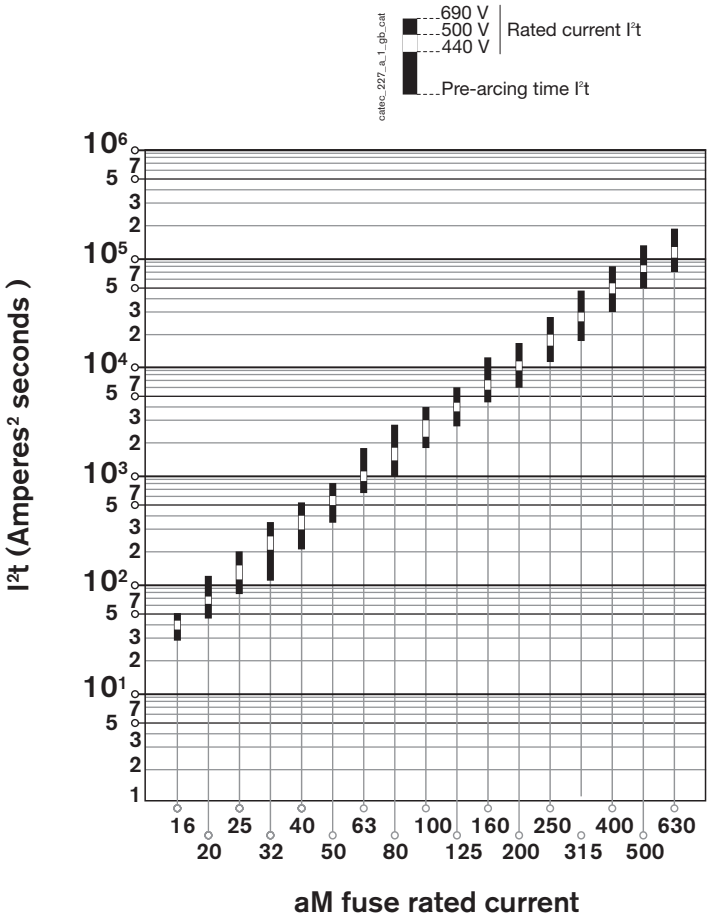

Power losses without striker at In (W)

Rated operational currents In (A)	Fuses size 00	0/OS	1	2	3
16	1.1 W				
20	1.4 W				
25	1.7 W				
32	2.2 W	2.2 W			
35	2.4 W	2.4 W			
40	2.8 W	2.8 W			
50	3.6 W	3.6 W	3.6 W		
63	4.6 W	4.6 W	4.6 W	4.6 W	
80	6.0 W	6.0 W	6.0 W	6.0 W	
100	7.5 W	7.5 W	7.5 W	7.5 W	
125	9.5 W	9.5 W	9.5 W	9.6 W	
160	10.7 W	12.0 W	12.7 W	12.7 W	
200		18.0 W	16.4 W	16.4 W	
224			21.5 W	18.7 W	
250			29.0 W	21.5 W	
315				29.0 W	25.0 W
355				32.0 W	29.0 W
400				34.0 W	34.0 W
425					38.5 W
500				45.0 W	45.0 W
630					60.0 W

Time/current characteristics (IEC standard)

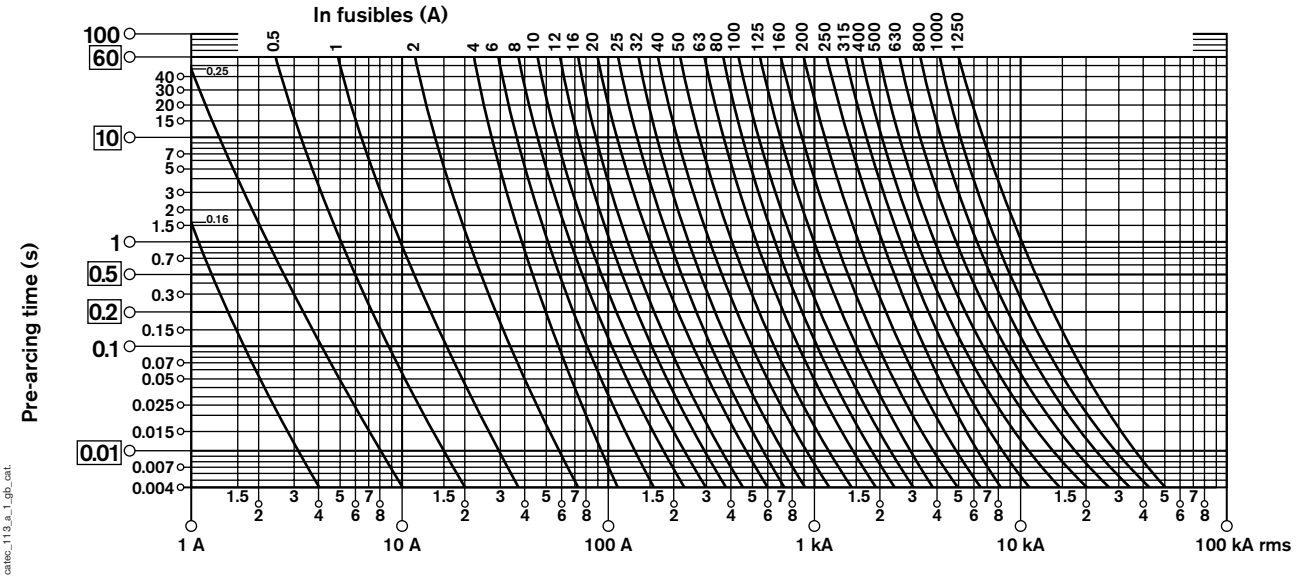

This document is not a contract. SOCOMEC reserves the right to modify features without prior notice in view of continued improvement. 2008 - 2009

High speed fuses

These ultra fast fuses ensure protection against short circuit currents. Due to their design, total operation time is much faster than gG and aM fuses. They are generally used for power semiconductors (I^2t "high speed" < I^2t of the semiconductor to be protected).
Overloading (I ~ 2 In, t ≥ 100 seconds) must be avoided. If necessary, protecting against overloads must be ensured by another device.
High speed fuse determination involves a rigorous procedure which can be complex for certain applications. The method below represents a first step.
Please consult us for any specific application.

Choosing "high speed" fuses

Temperature stress

High speed fuses are designed to protect semiconductor devices; Each semiconductor device has a specified maximum I^2t, and this is the most important factor to be considered when choosing the correct fuse, rather than the thermal rating. For effective protection, the fuse I^2t must be about 20% less than the semiconductor's rupturing I^2t.

Example: a 30 A/400 V diode withstands a maximum I^2t of 610 A^2s. The associated high speed fuses maximum I^2t will be 610 -20% = 488 A^2s with 400 V.

Voltage

I^2t (see general catalogue) is usually given for 660 V. Use with a different voltage requires the following correction:

$$(i^2t)\ V = Kv \times (i^2t)\ 660\ V$$

Example: for U = 400 V Kv = 0.6
(i^2t) 400 V = 0.6 x (i^2t) 660 V

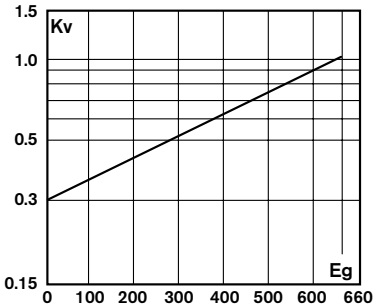

catec_033_a_1_gb_cat.

Fig. 1: Kv correction factor

Kv: I^2t correction factor
Eg: operating voltage rms value

Power factor: The I^2t indicated in the general catalogue is given for a power factor of 0.15 (cos. φ of default circuit). For other power factor values, multiplying the I^2t value by Ky value is necessary.

POWER FACTOR	0.1	0.15	0.2	0.25	0.30	0.35	0.40	0.45	0.50
Ky	1.04	1.00	0.97	0.93	0.90	0.87	0.85	0.82	0.81

Nominal current

Once the fuse's maximum I^2t has been established, the circuit's nominal current value must then be taken into account.

Example: in the previous example, the high speed fuse's maximum I^2t was established thus: 488 A^2s at 400 V. At 660 V this value is worth: 488/0.62 = 787 A^2s. The circuit current is 20 A.

Note that with a 25 A high speed fuse where I^2t at 660 V, the value is 560 A^2s.

Choosing "high speed" fuses (continued)

Correction according to ambient temperature

High speed fuse rating is given for an ambient temperature of 20 °C. Maximum operating current I_b is given by:

$$I_b = K_{TUR} \times (1 + 0.05\ v) \times I_n$$

- I_n: fuse's rated current in A.
- s: speed of cooling air in m/s.
- K_{TUR}: value given by figure 2 according to air temperature in fuse proximity.

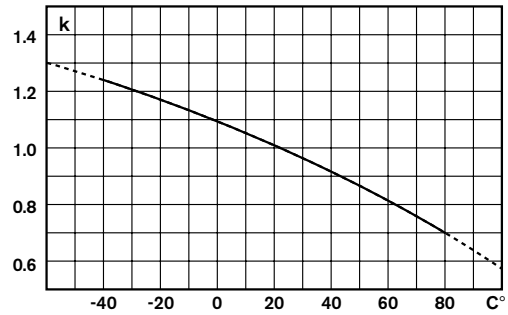

catec_034_a_1_gb_cat.

Fig. 2: K_{TUR} correction factor

Series connection

This is not recommended when the fault current is insufficient to melt the fuse in less than 10 ms.

Parallel connection

Placing fuses in parallel is possible between two fuses of the same size and rating. This is usually carried out by the manufacturer.

In cases of parallel connection, care must be taken that the operating voltage does not exceed 90% of the fuse's nominal voltage.

Cyclic overload

Please consult us.

Loss in Watts

These are given in the general catalogue and correspond to power loss with nominal current.

To use an I_b current different from I_n, the loss in Watts must be multiplied by the K_p value given in the figure below.

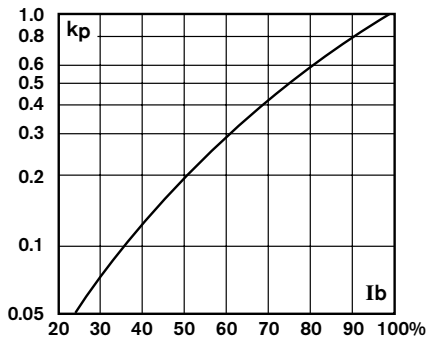

catec_035_a_1_gb_cat.

Fig. 3: K_p correction value

K_p: loss correction value
I_b: load current rms value in% of nominal current.

This document is not a contract. SOCOMEC reserves the right to modify features without prior notice in view of continued improvement. 2008 - 2009

Discrimination

Discrimination between fuses

Fuses discrimination between LV and HV

Operating an LV fuse must not result in melting of the HV fuse placed at the HV/LV transformer primary.

In order to avoid this, it is necessary to check that the lower part of HV curve never crosses the upper part of the LV curve before the LV I_{sc} maximum limit (see calculation page D.22).

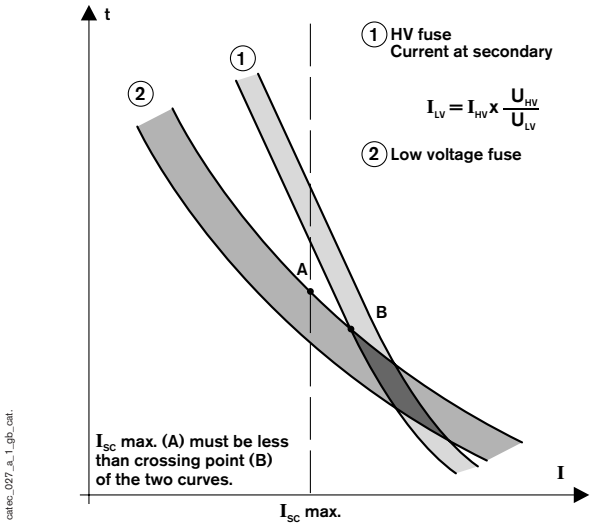

Fig. 1: discrimination between HV and LV fuses

Discrimination on a network powered by UPS (Uninterruptible Power Supply)

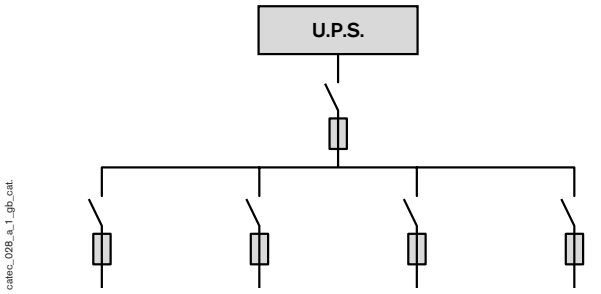

Fig. 2: network powered by UPS

Protection devices discrimination is highly important on networks powered by UPS, where protection tripping must not cause any disturbance on the rest of the network.

Discrimination must take into account two properties of these networks:

- low fault current (approx. 2 x I_n),
- maximum fault time generally set at: 10 ms.

To comply with these criteria and ensure correct discrimination, the current in each branch must not exceed the values in the table below:

PROTECTION BY	MAX. STARTING CURRENT
gG fuse	$\frac{In}{6}$
High speed fuse	$\frac{In}{3}$
Small circuit breakers	$\frac{In}{8}$

Discrimination between fuse and overcurrent switch

The fuse is placed upstream of the overcurrent switch. An overcurrent switch consists of a contactor and a thermal relay.

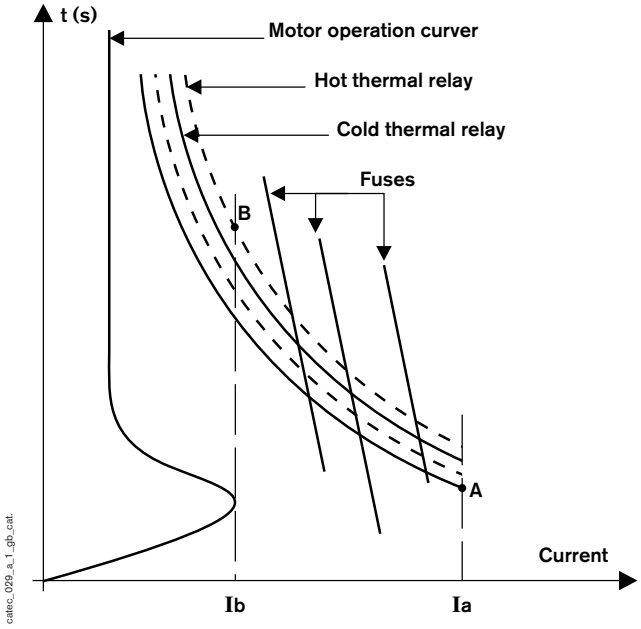

Fig. 3: discrimination between fuses and overcurrent switch

The curves of fuses linked of the overcurrent switch must pass through point A and B corresponding to:

- I_a: overcurrent switch's breaking capacity
- I_b: motor start-up current

START-UP TYPE	I_b(1)	START-UP TIME(1)
Direct	8 I_n	0.5 to 3 sec.
Star-delta start	2.5 I_n	3 to 6 sec.
Stator start	4.5 I_n	7 to 12 sec.
Autotransformer start	1.5 to 4 I_n	7 to 12 sec.
Rotor start	2.5 I_n	2.5 to 5 sec.

(1) average values may vary considerably according to the type of motor and receiver.

The fuse's temperature stress must be less than that of the overcurrent switch.

Amongst the different fuse ratings available, choose the highest rating in order to minimise power dissipation.

This document is not a contract. SOCOMEC reserves the right to modify features without prior notice in view of continued improvement. 2008 - 2009

Discrimination (continued)

Discrimination between circuit breaker and fuse

The judicious combination of a fuse with other devices (circuit breakers, etc.) provides perfect discrimination and offers optimum economy and safety.

Fuse upstream – circuit breaker downstream

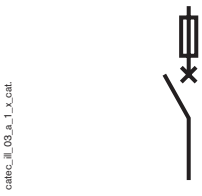

- The fuse's pre-arcing melting curve must be placed above point A (fig. 1).
- The fuse's complete blowing curve must cut the circuit breaker's curve before the circuit breaker's I_{sc} value (ultimate breaking capacity).
- After the crossover pint, the fuse's I^2t must be less than that of the circuit breaker.
- The fuse's and circuit breaker's I^2t must always be less than that of the cable.

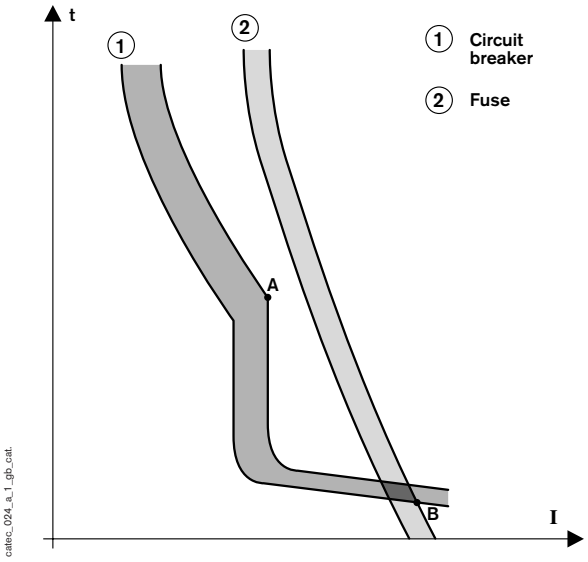

Fig. 1: fuse/circuit breaker discrimination

gG fuse upstream – several circuit breakers downstream

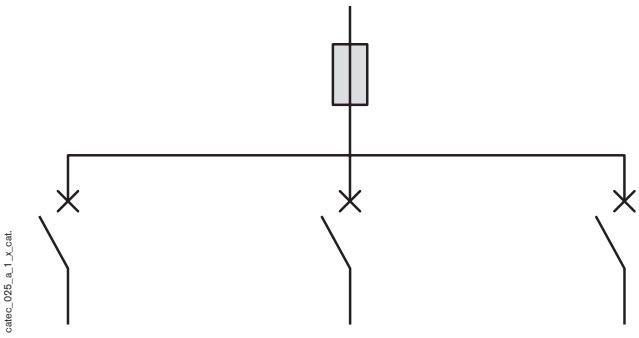

- Fuse rating must be greater than the sum of circuit breaker currents simultaneously on load.
- Fuse blowing curve must be above point A of the circuit breaker with the highest rating.
- Crossover point B (see fig. 1) must be less than the circuit breakers' lowest ultimate breaking capacity.
- After point B, the fuse's total I^2t must be less than any upstream circuit breaker's I^2t.

Circuit breaker upstream – several fuses downstream

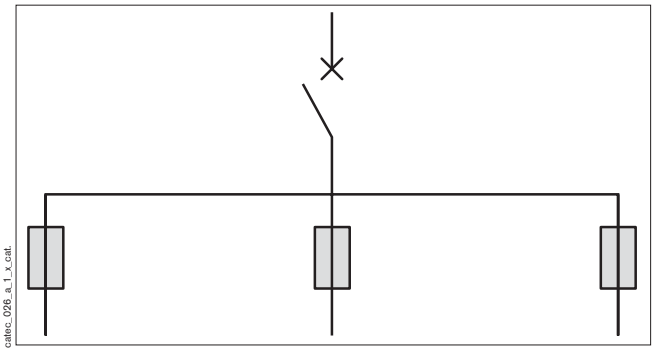

- The breaking capacity of all fuses and circuit breakers must be greater than maximum short circuit current possible in the circuit.
- The thermal setting of the circuit breaker (I_r) must be such that:
  1.05 Ir ≥ $I_1 + I_2 + \ldots I_n$.
  $I_1 + I_2 + \ldots I_n$: sum of currents protected by fuse in each branch.
- I_r current setting must also meet the following condition:

$$I_r \geq Kd \times I_n$$

In: fuse rating of the circuit with the highest load.

Table A: Kd values (according to IEC 269-2-1)

gG FUSE RATING (I_n) (A)	Kd
$I_n \leq 4$	2.1
$4 < I_n < 16$	1.9
$16 \leq I_n$	1.6

Example: the circuit with the highest load is protected by a 100 A gG fuse. The upstream circuit breaker's minimum setting current enabling fuse discrimination will be:
$I_r \geq 1.6 \times 100$ A = 160 A.

- The highest rated fuse's I^2t must be less than the I^2t limited by circuit breaker. The latter must be less than the cables' maximum I^2t.
- Im (magnetic) minimum setting value.
  8 Kd ≤ I_m ≤ 12 Kd
  Kd is given in table A.

This document is not a contract. SOCOMEC reserves the right to modify features without prior notice in view of continued improvement. 2008 - 2009

Discrimination (continued)

General points

In cases of fault on any installation point, protection discrimination is ensured when the protection device (PD) opens directly upstream of the fault, without triggering the breaking of other devices in the entire installation. Discrimination permits continuous operation on the rest of the network.

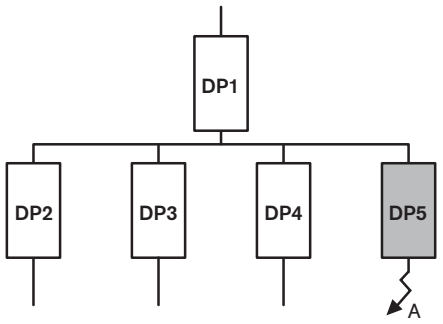

Fig. 1: a fault at point A must trigger the breaking of the protection device PD5 without breaking any other PD

- Total discrimination is ensured when time/current zones characterising protection devices do not overlap.

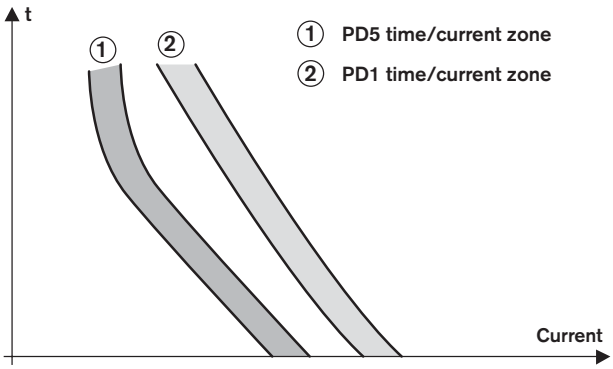

Fig. 2: total discrimination

- Partial discrimination consists of limiting the PD discrimination in one part only of their time/current zone. Where the default current is less than the curves' crossover points, the result is total discrimination.

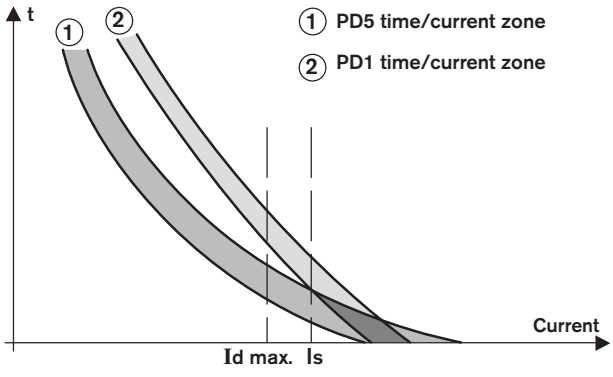

Fig. 3: partial discrimination

Discrimination between fuses

gG and aM fuses discrimination

Total discrimination is ensured by choosing fuses in tables A and B (according to IEC 269 -1 and 269 -2 -1).
However, in certain uses partial discrimination may suffice.

Table A

UPSTREAM FUSE	DOWNSTREAM FUSE	
gG	gG	aM
Ratings (A)		
4	1	1
6	2	2
8	2	2
10	4	2
12	4	2
16	6	4
20	10	6
25	16	8
32	20	10
40	25	12
50	32	16
63	40	20
80	50	25
100	63	32
125	80	40
160	100	63
200	125	80
250	160	125
315	200	125
400	250	160
500	315	200
630	400	250
800	500	315
1000	630	400
1250	800	500

Table B

UPSTREAM FUSE	DOWNSTREAM FUSE	
aM	gG	aM
Ratings (A)		
4	4	2
6	6	2
8	8	4
10	10	6
12	4	2
16	16	10
20	20	12
25	25	12
32	32	20
40	32	25
50	40	25
63	50	40
80	63	50
100	80	63
125	100	80
160	125	100
200	160	125
250	160	160
315	200	200
400	250	250
500	315	315
630	400	400
800	500	500
1000	500	630
1250	630	800

gG/High speed fuses discrimination

- gG upstream - high speed downstream:
  High speed fuse's pre-arcing time must be less than half of the gG fuse's pre-arcing time, between 0.1 and 1 second.
- High speed upstream - gG downstream:
  High speed fuse rating must be at least equal to 3 times the rating of the gG fuse.

This document is not a contract. SOCOMEC reserves the right to modify features without prior notice in view of continued improvement. 2008 - 2009

Energy management
DIRIS and COUNTIS

Functions and applications

Introduction

The COUNTIS system is used for energy metering. The DIRIS system is used for measuring electrical quantities, metering and energy management[1], monitoring, control/command and the protection of the installations.
All these functions can be centralised on a PC using the CONTROL VISION software or another system (PLC for example) via a RS485 link with the JBUS/MODBUS or PROFIBUS protocol.

Measurement

Whatever the network (single, two and three-phase), the DIRIS measures the current (from 1, 2 or 3 CTs) and the voltage 600 or 700 VAC between phases or above from a VT, allows the calculation of:
- the TRMS values[2] of the currents,
- the TRMS values[2] of the voltages,
- the active power (W),
- the reactive power (Q) with the indication of the sign (L for inductive and C for capacitive) and thanks to the following formula: $\sqrt{Q = S^2 - P^2}$,
- the apparent power (VA),
- the power factor (FP) with the indication of the sign (L for inductive and C for capacitive) and thanks to the following formula: FP = P/S.

The frequency (Hz) will be measured on phase 1 of the network.

Metering

The metering of active (kWh) and reactive (kvarh) energy is calculated from the active and reactive power. They reflect the consumption of an electrical installation. The COUNTIS is used for active energy metering on 2 quadrants. The DIRIS is used for active and reactive energy metering on 2 or 4 quadrants.
From 1 or 8 ON/OFF inputs, it is possible to count kWh according to an external signal (example: energy supply company clock) or impulses coming from meters (water, gas, electricity, etc.) or other systems (breaking devices, etc.). Moreover, the DIRIS CMv2 provides 8 sub-meters tripped by a start and end date and/or time.
Examples: every day from 8 o'clock to 12 o'clock or from 01/01/99 at 2 o'clock to 01/02/99 at 2 o'clock
The energy is made available on 1 programmable impulse output for the kWh (COUNTIS and DIRIS) and a 2nd programmable impulse output for the kvarh (CM/CMv2 only).

(1) Metering visualises consumption from power on in real time. Management is based on a history of the 10 minute periods.
(2) The TRMS value is also called true RMS. See § disturbance of measuring devices.

Energy management

Energy management is based on the integration of the active power over a period determined by the energy supplier. In France, this period is 10 minutes and of 15 minutes in Belgium or in Germany. To use this function, it is necessary to use a product capable of integrating this value according to an internal (DIRIS clock) or external (energy supply company signal) synchronisation and to store it (FIFO memory) to avoid there being permanent communication with the centralisation system.
The CM has a memory capacity of 8 days in 10 minute periods and 12 days in 15 minute periods. The CMv2 has a 28 day memory in 10 minute periods and 42 days in 15 minute periods.
The relationship between these values and pricing (see opposite) allows:
- drawing up of a complete tariff report indicating the kWh consumed by tariff-period,
- analysis of a load curve,
- performance of a tariff simulation function.

This document is not a contract. SOCOMEC reserves the right to modify features without prior notice in view of continued improvement. 2008 - 2009

Energy management
DIRIS and COUNTIS

Functions and applications (continued)

Monitoring

The DIRIS system allows alarms to be configured for voltage, current, active power, power factor and frequency (Mh and CMv2).

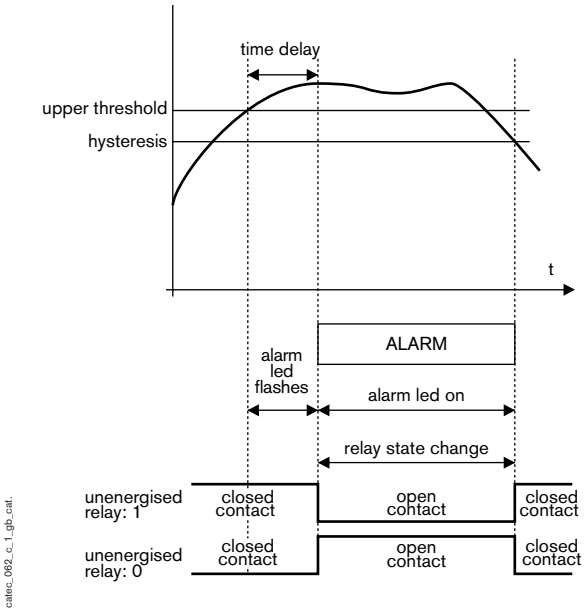

Fig. 1: monitoring of an upper threshold

Each alarm is characterised by the programming of threshold. The alarm threshold may be an upper threshold (superior: overvoltage, overcurrent, etc.) or a lower threshold (inferior: voltage drop, etc.).

Application

- Protection of dangerous machinery in cases of mains undervoltage on the network.
- Monitoring motor current. An under-current reveals a load modification (belt rupturing…).
- Monitoring of a lack of voltage:
  - hysteresis,
  - time delay,
  - break state of the relay:
    - 0: normally open,
    - 1: normally closed.

  The normally break closed position provides a positive security alarm: the relay opens if there is a loss of auxiliary power supply to the DIRIS, which corresponds to an alarm.
  The normally brek open position provides a negative security alarm: the relay closes if there is a loss of auxiliary power supply to the DIRIS, which corresponds to an alarm.

Notes:

For each parameter to be monitored, the DIRIS:
- checks configuration coherence,
- stores the three last alarms for each parameter, including:
  - violation duration,
  - date and time,
  - maximum values reached.

Control and command

To control and command, it is necessary to be able to drive a set of inputs and outputs. The DIRIS with 2 to 8 input and 2 to 6 output, allows an operator to manage his operations off-site. Indeed, the ON/OFF inputs, connected to auxiliary contacts, transmit the position information (open: closed) and the number of operations (maintenance). The relay outputs will drive a whole series of actuators (load-break switches, contactors…) to shed load from a distribution system or stop a manufacturing process. This remote control system is easily done using an RS485 serial link directly connected to a PC (CONTROL VISION software, for example) or another system (PLC, etc.).

Communication

See § Communication networks.

This document is not a contract. SOCOMEC reserves the right to modify features without prior notice in view of continued improvement. 2008 - 2009

Communication: general points

Description

DIRIS and COUNTIS can be connected to any system (PLC, PC, etc.) operating with an RS485 network and JBUS/MODBUS® protocol.

The communication function enables:
- remote value readings measured by the DIRIS system and their processing by a PC or other,
- configuration readings (measurements, alarms, etc.),
- remote configuration (transformation ratios, alarms, etc.).

Physical layer: RS485
- 3-wire serial link + earth (see also link installation below).
- Configurable output: 1200, 2400, 4800, 9600, 19200 or 38400 bauds.
- Topology: bus network with up to 31 devices on the same link. To connect more than 31 products, RS485 repeaters can be used (please consult us).
- Maximum range: 1500 m to 9600 bauds. For bigger distances, repeaters or RS485 dividers must be used (please consult us).

Link layer
- Operating in master/slave mode.

The master (supervisor, PLC, etc.):
- interrogates or sends a command to each DIRIS or other terminal (slave) which answers or performs the command,
- recognises each slave by identifying it by a number called the address. The address of each DIRIS can be set between 1 and 255.

- The link layer also provides transmitted message control, enabling detection of possible transmission errors.

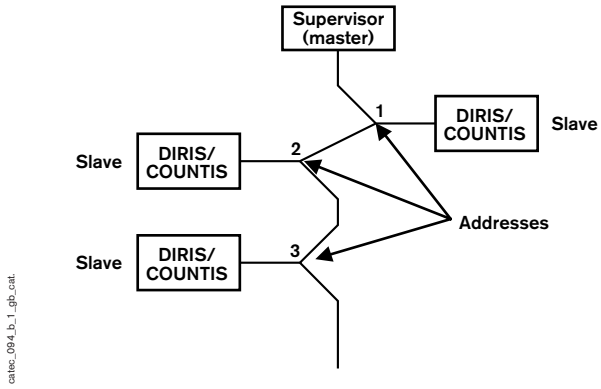

Fig. 1: operation in master/slave mode

Protocol

Jbus/Modbus is used in RTU (Remote Terminal Unit) mode with hexadecimal characters consisting of at least 8 bits. This protocol implies a master-slave dialogue that can operate according to 2 principles:
- the master interrogates a slave and waits for its answer,
- the master interrogates all the slaves one after the other without waiting for their answers.

The dialogue is identified as a communication frame. A frame consists of:

Address of the slave	Code of the function	Address of the message	Size of the message CRC16

To exploit the information, our products have 4 functions:
Function 3: for reading N words (maximum 128 words)
Function 6: for writing a word
Function 8: for exchange diagnosis (from meters 1, 3, 4, 5 and 6)
Function 16: for writing N words.

Connecting the RS485 link

DIRIS and COUNTIS communicate via an EIA 485 (RS485) 3 active wire serial link (L1, L2 and 0 V), with or without shielding.
On the same RS485 link, up to 31 devices can be connected plus the master (PLC or micro-computer) equipped with an RS485 interface.
The number of devices may be increased on a communication network by using repeaters (maximum 255 per communication channel).
We recommend the use of a twisted pair with earth wire. In environments with a high level of interference, use of a 3-wire shielded cable linking the shielding to earth at one end only is advised.

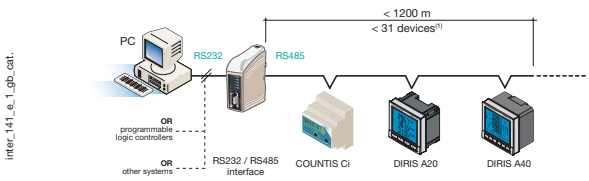

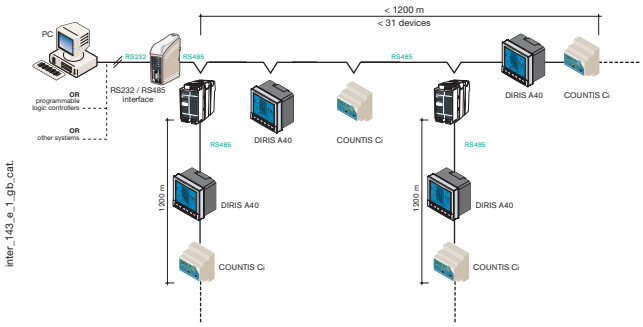

At either end of the RS485 link, it is imperative that there be a resistive load of 120 Ohms integrated into each DIRIS.

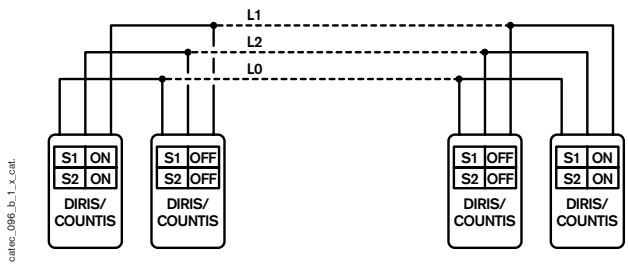

Fig. 3: example of DIRIS connection

We recommend the use of a cable of type
- LIYCY: 2 twisted pairs with general shielding (min. section 0.34 mm²).
- LIYCY-CY: 2 twisted pairs with shielding of each pair plus general shielding (min. section min. 0.34 mm²).

Note: all the products connected to the same RS485 link must have a different address (JBUS/MODBUS® address).

This document is not a contract. SOCOMEC reserves the right to modify features without prior notice in view of continued improvement. 2008 - 2009

Energy management
DIRIS and COUNTIS

Communication frame

DIRIS M addressing table

Information reading (function 3)

ADDRESS IN HEXA.	NUMBER OF WORDS[1]	NAME	UNIT
700	1	0 for a CT with a 1A secondary 1 for a CT with a 5A secondary	A
701	1	current phase 1	0.1 A
703	1	current phase 2	0.1 A
705	1	current phase 3	0.1 A
707	1	current of neutral	0.1 A
709	1	phase to neutral voltage phase 1	0.1 V
70B	1	phase to neutral voltage phase 2	0.1 V
70D	1	phase to neutral voltage phase 3	0.1 V
70F	1	phase to phase voltage U1-2	0.1 V
711	1	phase to phase voltage U2-3	0.1 V
713	1	phase to phase voltage U3-1	0.1 V
715	1	active power	0.1 kW
717	1	reactive power	0.1 kvar
719	1	apparent power	0.1 kVA
71B	1	power factor	/
71D	1	frequency	0.1 Hz
71F	1	I1 max	0.1 A
721	1	I2 max	0.1 A
723	1	I3 max	0.1 A
725	1	P max	0.1 kW
727	1	active energy + (4 upper digits)*	kWh
729	1	active energy + (3 lower digits)*	
72B	1	reactive energy + (4 upper digits)*	kvarh
72D	1	reactive energy + (3 lower digits)*	
72F	1	active energy (4 upper digits)*	kWh
731	1	active energy (3 lower digits)*	
733	1	reactive energy (4 upper digits)*	kvarh
735	1	reactive energy (3 lower digits)*	
737	1	sign P 0 =+ and 1 =-	/
738	1	sign Q and PF 0 =+ and 1 =-kvar	/

[1] Size of this zone: 30 words or 1E in hexadecimal (with the 4 quadrant option) - 24 words or 18 in hexadecimal (without the 4 quadrant option)

** position digits on the display*

Example

To read 3650 kWh it is necessary to send the following message:

Slave	Function	Address high-order	Address low-order	Number of words high-order	Number of words low-order	CRC 16
05	03	07	27	00	02	74F0

Response of the DIRIS M:

Slave	Function	Number of bytes	Value of high-order	Value of low-order	CRC 16
05	03	04	0003	028A	CF34
			3	**650 kWh**	

Example

To display all the values in a single interrogation, it is necessary to send the following frame:

Slave	Function	Address high-order	Address low-order	Number of words high-order	Number of words low-order	CRC 16
05	03	07	00	00	1E	C532

Writing of the devices (function 6 or 16)

ADDRESS IN HEXA.	NUMBER OF WORDS[1]	NAME	UNIT
100	1	primary of CT	1 A
102	1	weight of the impulse output	10 Wh
104	1	type of network: 0: 3 Lb 1: 3 Lnb 2: 4 Lb 3: 4 Lnb	/
105	1	frequency 0: 50 Hz and 1: 60 Hz	Hz
106	1	integration time of power	1 minute
107	1	integration time of current	1 minute
108	1	flashing of parameters	500 ms
10A	1	flashing of measurements	500 ms
500	1	reset	/

[1] Size of this zone: 9 words or 9 in hexadecimal

Recommendations

After modification of the parameters, a back-up must be made using the address 500.

Example

Configuration of a 10 A CT primary for the DIRIS number 5:

Slave	Function	Address high-order	Address low-order	Number of words high-order	Number of words low-order	CRC 16
05	06	01	00	00	0A	09B5

Response of the DIRIS M: identical to the message sent.

This document is not a contract. SOCOMEC reserves the right to modify features without prior notice in view of continued improvement. 2008 - 2009

Installation guide

Ferro-magnetic equipment

This consists of two repelling magnets (one fixed, the other moving and attached to the needle), placed inside a coin supplied by the current to be measured.

Magneto-electric equipment reads the alternating signal rms: waveform influence is negligible. it can also be used on a DC signal, but is detrimental to its accuracy class.

Its simplicity makes it a particularly suitable instrument for measuring alternating currents on LV switchboards.

Magneto-electric equipment

Measuring current flows through a moving coil placed in a permanent magnet's magnetic field. Under electro-magnetic forces, the coil pivots in proportion to the current value.
With its low consumption, it is an excellent measuring device for low value DC signals.

Magneto-electric equipment with rectifier

As the moving-coil galvanometer is a DC polarised device, it can measure high AC values by the addition of a diode rectifier.

Operating position

ROTEX and DIN indicators are calibrated with dials in a vertical position. Use in other positions is possible without noticeable loss of accuracy. Indicators can be calibrated to work in different positions on demand (to be specified when ordering).

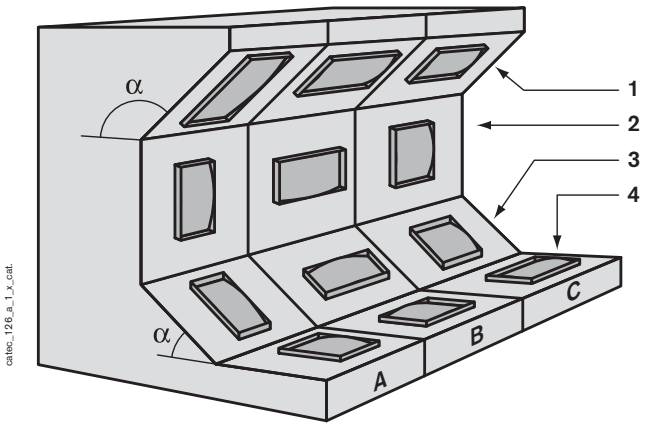

1: $\alpha > 90°$ 3: $\alpha < 90°$
2: $\alpha = 90°$ 4: $\alpha = 0°$

Use of voltage transformers

- 3 VT circuit: 63 kV mains – VT 63 kV / 100 V / $\sqrt{3}$

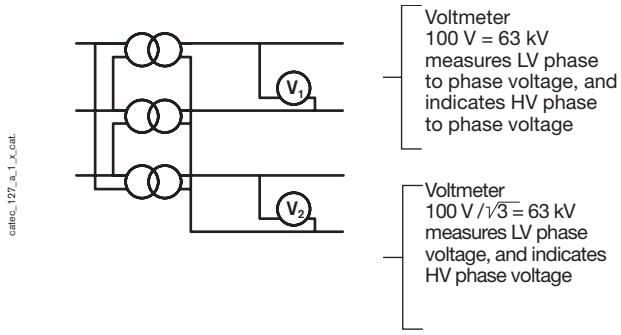

- 2 VTs in "V" circuit: 63 kV mains - VT: 63 kV / 100 V
  (use: measuring 3 voltage values with 2 VTs)

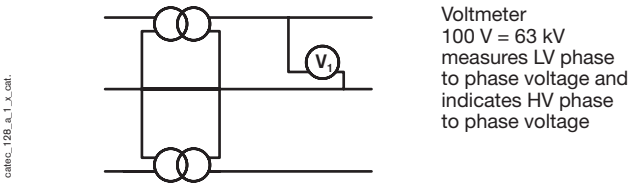

Power converter

Example: calibrating an active power converter:
CT 20 / 5 A, U = 380 V, three-phase mains, cos φ = 1
Standard calibration:
P' (converter) = UI cos $\varphi\sqrt{3}$ = 380 V x 5 A x 1 x 1.732 = 3290 W
therefore with a 20 A CT P = 3290 W x 20 / 5 = 13.16 kW
converter output: 0 mA = 0%; 20 mA = 100% load.

- Calibrating for numeric display, threshold relay or BMS (Building Management System): A numeric display can be calibrated to display 13.16 kW at 20 mA, therefore converter calibration is unnecessary.
- Calibrating for needle indicator (scaled from 0 to 15 kW) calibrated at 20 mA at scale lower limit: The associated device is not adjustable, therefore converter calibration will be performed as follows:

$$P' \text{ (converter)} = \frac{15 \text{ kW}}{13.16 \text{ kW}} \times 3290 \text{ kW} = 3750 \text{ W for 20 mA}$$

$$I' \text{ (converter output)} = \frac{13.16 \text{ kW}}{15 \text{ kW}} \times 20 \text{ mA} = 17.55 \text{ mA}$$

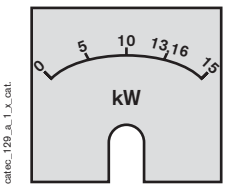

3290 W => 13.16 kW => 17.55 mA

3750 W => 15 kW => 20 mA

This document is not a contract. SOCOMEC reserves the right to modify features without prior notice in view of continued improvement. 2008 - 2009

Measuring

Installation guide (continued)

Accuracy class index

- **Analog measuring devices** are characterised by a class index (or accuracy class). This represents the maximum error expressed in hundredths of the device's highest value.
  Example: for an ammeter with 50 divisions, class 1.5
  the error will be $\frac{1.5}{100}$ x 50 therefore giving: 0.75 division:
  - therefore for a 20 A ammeter: 20/50 x 0.75 = 0.3 A,
  - therefore for a 400 A ammeter: 400/50 x 0.75 = 6 A.
- **Numeric (or digital) devices** can indicate a value of ±1 unit of the last displayed digit in addition to the true accuracy of the devices components.
  Example: A 3 digit indicator (999 points) with 0.5% accuracy, connected to a CT 400/5 A, 400 A display:
  - (a) intrinsic error 400 x $\frac{0.5}{100}$: ±2 A,
  - (b) display error: I digit gives therefore: ±1 A,
  - maximum reading values: (a) + (b) = ±3 A (at nominal load).
- **Current transformers** are characterised by their accuracy class. The error varies according to loads as follows:

		Error (± % of I_n)						
LOAD LEVEL		0.1 I_n	0.2 I_n	0.5 I_n	I_n	1.2 I_n	5 I_n	10 I_n
Class	0.5	1.0	0.75		0.5			
	1	2.0	1.50		1.0			
	3			3	3	3		
	5			5	5	5		
	5P5				5		5	
	5P10				5			5

Example: 5P5 CTs are used to measure motor circuit current and guarantee a ± 5% accuracy at 5 I_n.

Copper cable losses

Cable losses must be taken into account to define the CT or converter power to be chosen, so as to ensure correct measuring chain functioning.

$$\text{Loss (in VA)} = \frac{I^2 \text{ (in A)} \times 2}{S \text{ (in mm}^2\text{)} \times 56} \times L \text{ (in m)}$$

L: distance between CT and indicator

CABLE LOSS IN VA[1] For 5 A CT							
L (in m)	1	2	5	10	20	50	100
S (mm²)							
1.0	0.89	1.79	4.46	8.93	17.9	44.6	89.3
2.5	0.36	0.71	1.79	3.57	7.14	17.9	35.7
4.0	0.22	0.45	1.12	2.23	4.46	11.2	22.3
6.0	0.15	0.30	0.74	1.49	2.98	7.44	14.9
10	0.09	0.18	0.45	0.89	1.79	4.46	8.93
CABLE LOSS IN VA[1] For 1 A CT							
1.0	0.04	0.07	0.18	0.36	0.71	1.79	3.57
2.5	0.01	0.03	0.07	0.14	0.29	0.71	1.43
4.0	-	0.02	0.04	0.09	0.18	0.45	0.89
6.0	-	-	0.03	0.06	0.12	0.30	0.60
10	-	-	0.02	0.04	0.07	0.18	0.36

[1] *only the active component of losses is taken into account*

Summation transformer

Summation CTs enable rms addition of several AC currents of the same phase. These currents can have different cos. φ.
Summation CTs are defined by:
- the number of CTs to be connected (CTs with the same winding ratio),
- operating nominal power.

Example: 3 circuits to be measured for output onto recorder and indicator:

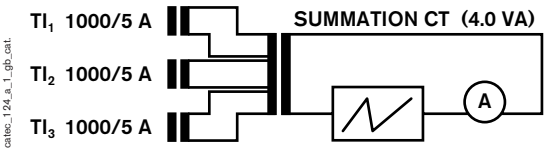

recorder (7.0 VA) + ammeter (1.5 VA)

- (a) power balance to be supplied by summation CT:
  (ammeter + recorder + measuring circuit loss)
  P' = 1.5 VA + 7.0 VA + 1.5 VA = 10.0 VA.
- (b) Power balance to be supplied by CTs:
  P = P' + summation CT's own consumption
  P = 10.0 VA = 4.0 VA = 14.0 VA gives therefore: P/3 per CT.

Saturable CT

Saturable CTs ensure power supply to low power thermal relays by protecting them against overcurrent due to frequent motor start-up (saturable CTs are only available with 1 A output).
SOCOMEC distinguishes between two types of saturable CTs:
- CTs with saturation starting at 4 I_n for normal start-up (e.g. pumps),
- CTs with saturation starting at 1.5 I_n for abrupt start-up (e.g. flapless fans).

Adapting winding ratios

With nominal currents of less than 50 A it is possible to use CTs with higher primary current, by passing the primary line through the CT several times. Notwithstanding savings, this method enables the different winding ratios to be adapted (constant efficiency and measuring accuracy).

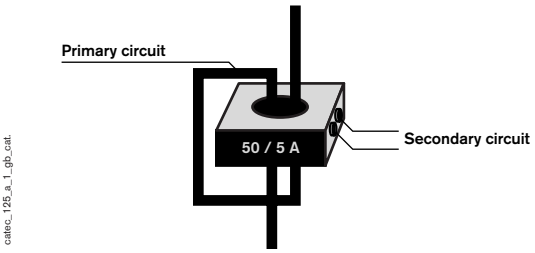

Example: 50 A CT primary circuit.

PRIMARY CURRENT TO BE MEASURED	NUMBER OF PASSES
50 A	1
25 A	2
10 A	5
5 A	10

This document is not a contract. SOCOMEC reserves the right to modify features without prior notice in view of continued improvement. 2008 - 2009

Differential protection

General points

An earth fault current is a current which flows to earth when there is an insulation fault(Id). An earth leakage current is a current which flows from the live parts of the installation to earth, in the absence of any insulation fault (If).

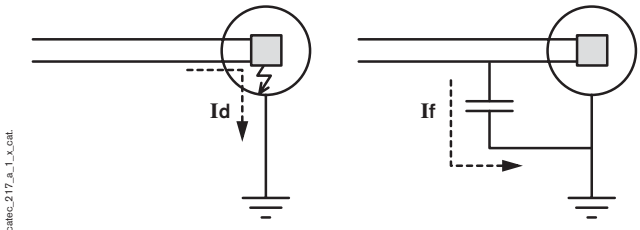

catec_217_a_1_x_cat.

A Residual Current Device (RCD) as defined by IEC 755 is designed to detect earth leakage or fault currents occurring generally downstream of their installation point.

The main types of differential device are:
- differential circuit breakers,
- differential switches,
- differential relays which are not integrated in the breaking device.

SOCOMEC, a specialised manufacturer, offers a complete range of differential relays which will be able to meet the requirements of every case appropriately.

Differential relays have two purposes:
- **to cut off the installation** when it is associated with a breaking device with automatic tripping,
- **signal a leakage** or fault current when it is used as a signalling relay.

Signalling

Signalling when an earth leakage or fault current is detected and remains at a level nevertheless allowing preventive maintenance work. Differential signalling consists of:
- of a toroid surrounding the live conductors to be monitored which detects the residual current when the sum of the currents on line is no longer zero,
- of a differential current analysis and measuring device which, using its alarm LEDs, its output relays or its digital output will alert the operators.

Certain applications may require both functions, breaking and signalling, at the same time.

Breaking the installation

Differential protection in this case consists:
- of a toroid surrounding the live conductors of the circuit to be protected which detects the residual current when the sum of the currents on line is no longer zero,
- of a differential current analysis and measuring device which issues the alarm signal,
- of a supply breaking device which is tripped by the alarm relay.

When a danger appears (electric shock, fire, explosion, malfunctioning of a machine, etc.) an automatic supply breaking device performs one or more of the following functions:
- protection against indirect contacts,
- limitation of the leakage currents,
- complementary protection against direct contacts,
- the protection of the equipment or of the production,
- etc.

Differential relays may be combined, in certain conditions, with contactors, circuit breakers or with the switches and fuse switches with tripping in the SIDERMAT and FUSOMAT SOCOMEC range.

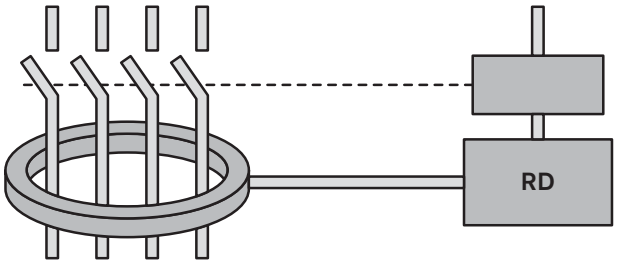

catec_130_a_1_x_cat.

This document is not a contract. SOCOMEC reserves the right to modify features without prior notice in view of continued improvement. 2008 - 2009

Differential protection

Definitions

Rated residual differential current IΔn

The rated residual differential current, written as IΔn, is the differential current's maximum value which must trigger the device's operation. Its value generally expresses the RCD's sensitivity or the setting of the rating (example: RCD 30 mA). An RCD can, from the point of view of the differential product standards, trip with half its rated residual differential current.

SOCOMEC devices, thanks to RMS measurement will be able to bear currents up to 75% (in class AC) of the rated residual current. This level of accuracy allows bigger leakage currents for the same level of protection and thus allows better selectivity.

IΔn current values are classified according to three classes of sensitivity:

SENSITIVITY	IΔn SETTINGS
LOW SENSITIVITY	20 A
	10 A
	5 A
	3 A
AVERAGE SENSITIVITY	1 A
	500 mA
	300 mA
	100 mA
HIGH SENSITIVITY	≤ 30 mA

Cut-off time

Standard IEC 60755 suggests the following preferential values for maximum cut-off time expressed in seconds for differential devices intended to protect against the electric shocks in the event of indirect contact type faults:

CLASS	In (A)	CUT-OFF TIME VALUES		
		IΔn s	2 IΔn s	5 IΔn s
TA	any value	2	0.2	0.04
TB	≤ 40 A only	5	0.3	0.15

Class TB takes into account combinations of a differential relay with a separate breaking device. For protection against indirect contacts, the installation standard IEC 60 364 allows a cut-off time at the most equal to 1s for a distribution circuit, without taking into account the contact voltage if a selectivity is judged necessary. In an end distribution, the differential devices used for the protection of people must be of the instantaneous type.

Classes of differential relays

Standard IEC 60755 defines three utilisation classes for RCDs depending on the type of network:

- **class AC** symbol:

example of a fault current:

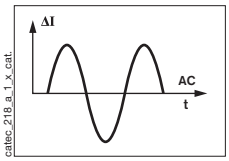

The device provides tripping with residual differential sinusoidal AC currents.

Classes of differential relays (continued)

- **class A** symbol:

example of a fault current:

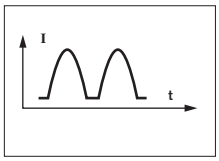

The device provides tripping with residual differential, pulsed sinusoidal AC currents whose DC component remains lower than 6 mA during an interval of at least 150° at the rated frequency

- **class B** symbol:

example of a fault current:

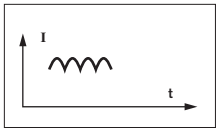

The device provides tripping with differential currents identical to the devices in class A but also differential currents coming from rectifier circuits:
- single alternation with capacitive load producing a smooth direct current,
- three-phase simple or double alternation,
- single phase double alternation between phases,
- any that charges an accumulator bank.

Electromagnetic compatibility (EMC)

The RCD sometimes trip for reasons other than the presence of an insulation fault. The causes are varied: storms, operation of high voltage devices, short-circuit currents, motors starting, fluorescent tubes coming on, closing on capacitive loads, electromagnetic fields, electrostatic discharges.

RCDs with sufficient immunity to these disturbances are spotted by the symbol.

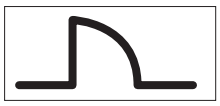

The auxiliary power supplies of SOCOMEC differential relays, strongly immunised, avoid spurious tripping or the destruction of components in the event of overvoltage due to lightning or a HV operation (see opposite).

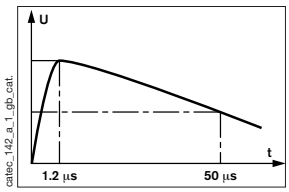

The principle of measurement by digital sampling of the differential signal and the choice of the toroid materials guarantee good resistance of the differential relays in the event of a wave of transient current occurring on closure of highly capacitive circuits (figure a) or on a disruptive discharge in the event of a dielectric rupture due to an overvoltage (figure b).

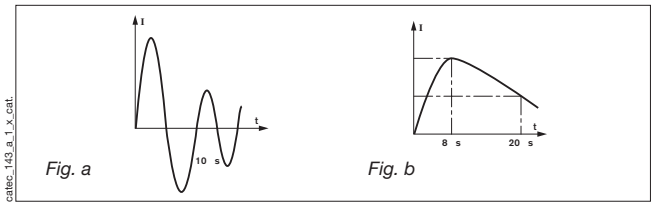

This document is not a contract. SOCOMEC reserves the right to modify features without prior notice in view of continued improvement. 2008 - 2009

Application

Protection of an installation

• Total selectivity (vertical selectivity)

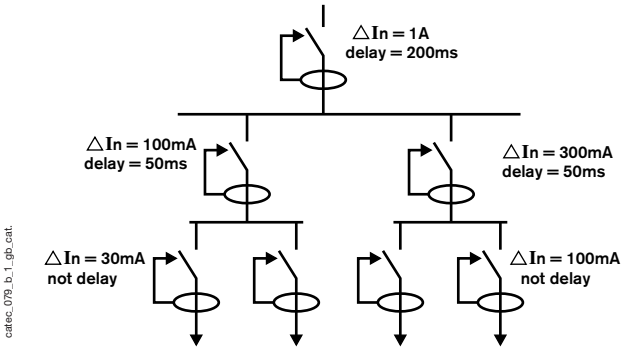

Fig. 1

This is intended to suppress the fault current only in the part of the installation where the fault is to be found. To do this, two conditions must be met:

1. The operating time of the downstream RCD (tf_B figure 2) must be smaller than the non-operating time of the upstream device (tnf A). A simple solution to meet this condition consists of using class S RCDs (adjustable delay). Upstream RCD delay must be greater than downstream RCD delay (figure 1).
2. The sensitivity of the downstream RCD (IΔn B) must be smaller than half of IΔn A upstream RCD sensitivity (see figures 1 and 2).

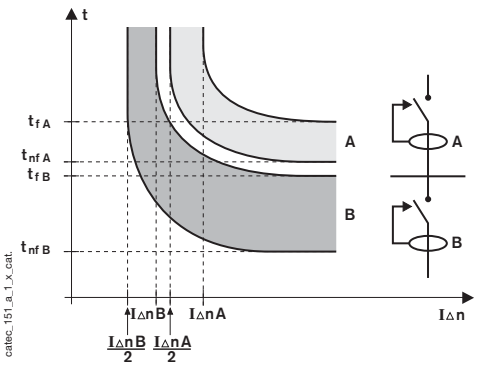

Fig. 2

• Horizontal selectivity

This arrangement consists of placing in certain conditions differential devices that may be of the same (IΔn) at the same level of a distribution (inside the same panel, an adjacent panel or connected with a type U1000 cable…) without needing to use a general differential device.

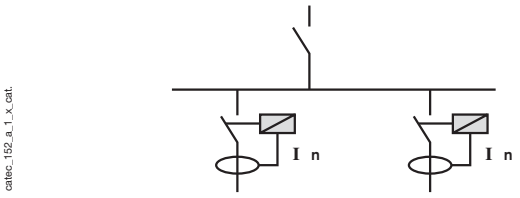

With a TT type arrangement, a general differential device is not obligatory upstream of the differential section feeders insofar as all the installation up to the upstream terminals of the latter, complies with the provisions relating to class II or by extra insulation during the installation.

Protection of motors

An insulation fault that affects the motor coil will have effects that can be classified at two levels:

- destruction of the coil, the motor may be repaired,
- destruction of the magnetic circuit, the motor is destroyed.

The installation of a differential device which limits the fault current to less than 5% of In guarantees the non-perforation of the magnetic circuits and saves the motor. As certain large motors may show imbalance between the currents or leakage currents during the start-up phase, it is acceptable to neutralise the differential relay during this phase in certain conditions.

Leakage current of equipment

Information processing equipment, according to standards EN and IEC 60950, may be a source of leakage current due to the particular filtering devices that are associated with them.

Capacitive leakage currents of 3.5 mA are accepted for power connector circuits and 5% (in certain conditions) for fixed installation circuits. Standard EN 50178 on the Electronic Equipment (EE) used in power installations accepts maximum leakage currents of 3.5 mA AC and 10 mA DC for EE.

In case of these values being exceeded, it is necessary to take complementary measures, such as doubling the protective conductor, cutting off the power supply if the PE is broken off, putting into place a transformer which provides galvanic insulation, etc.

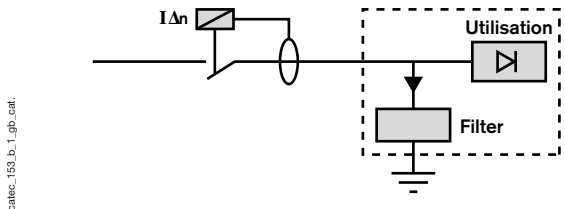

Fig. 1: connection of IMD: general case

"Sympathy" effect

An important insulation fault affecting a feeder can loop back by the earth leakage capacities of another feeder and cause the latter to trip without there having been any reduction in the insulation of the circuit concerned.

This phenomenon will be particularly frequent on feeders with potentially important earth leakage capacities or when the fault appears in a very long wiring system.

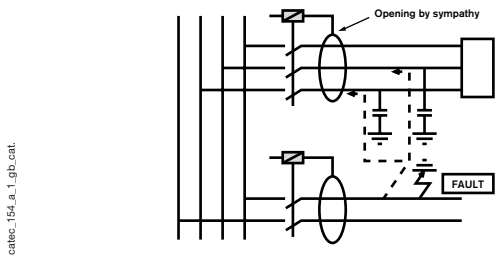

One solution to limit this effect is to delay the differential devices.

Protection against fire

Paragraph 482.2.10 of standard IEC 60 364 stipulates the use of RCDs at IΔn ≤ 500 mA to protect premises where there is a risk of fire.

This document is not a contract. SOCOMEC reserves the right to modify features without prior notice in view of continued improvement. 2008 - 2009

Differential protection

Implementation

All installations have an earth leakage current mainly due to the conductors' capacitive leakage and to anti-parasitic or EMC filtering capacitors, for example class I equipment.

The sum of all these leakage currents may cause highly sensitive RCDs to trip (tripping becomes possible from IΔn/2 (IΔn x 0.80 for SOCOMEC RESYS P and M devices) without endangering safety to personnel.

Earth leakage currents may be limited by:

- the use of class II equipment,
- isolating transformers,
- circuits powered by UPS,
- limiting the number of receptors protected by the same RCD.

Improving RCD performance

- Installing to begin with the TT installation.
  At the origin of TT installation (and only in this case), it is possible to replace the detection toroid placed round live conductors by a single toroid linking the HV/LV transformer neutral to the earth. This arrangement improves immunity to disturbances and has the advantage of being more economical.

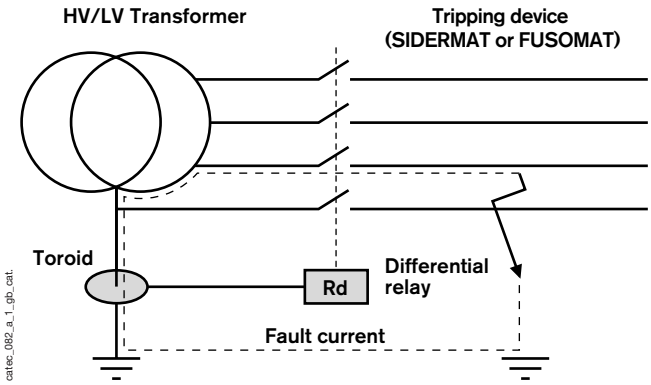

- Increasing immunity to disturbances of a toroid by:
  - symmetrical arrangement of the phase conductors around the neutral conductor
  - using a toroid with a diameter of at least equal to twice that of the circle formed by conductors: Δ ≥ 2d
  - possible addition of a magnetic shield, with a height at least equal to 2D.

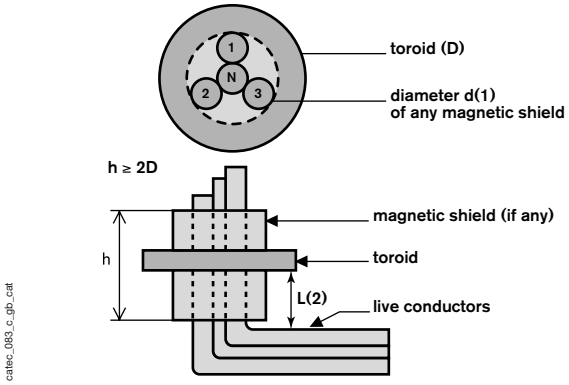

(1) d = the centering of the cables in a toroid is a guarantee of the local non-saturation of the toroid. A saturated toroid causes spurious trippings.

2) L = distance between the toroid and the bend in the cables.

Indication of test conditions of differential devices

Complementary marking should be provided to indicate to the user that the test must be activated regularly (every 3 to 6 months is recommended).

Choice of differential device according to the auxiliary power supply principles

The level of skill of the operators and the destination of the installation will, according to IEC 60 364, determine the choice of the differential protection devices according to the type of operation linked to the power supply principle.

NATURE OF THE DIFFERENTIAL DEVICE	CHOICE POSSIBLE ACCORDING TO THE TYPE OF INSTALLATION	
	UNINFORMED PERSONNEL (BA1)	TRIED AND CHECKED BY PERSONNEL, AT LEAST INFORMED (BA4)
With auxiliary source independent of the network	NO	YES
operating independently of the network voltage	YES	YES
with operation dependent on the network voltage or on any auxiliary source with a fail-safe	NOT recommended	YES
with operation dependent on the network voltage without a fail-safe	NO	YES except circuits PC 16 A
with operation dependent on the network voltage of an auxiliary source without a fail-safe	NO	YES except circuits de PC 16 A and signalling of an aux. source fault

NB: a transformer connected to the network does not constitute an auxiliary source independent of the network.

Characteristics of a differential device with an auxiliary source

- Monitoring independent of the voltage of the circuit monitored.
- Suited to networks with high and rapid fluctuation.
- Monitoring independent of the load current (surge of non-balanced currents, coupling of inductive loads).
- Better immunity to tripping in case of transient faults (integration time of the order of 30 ns whereas a device with its own current risks tripping in a few ms).

Precautions when installing toroids on armoured cables

- Armoured cable: insulate electrically from the connection box, and connect it to earth.

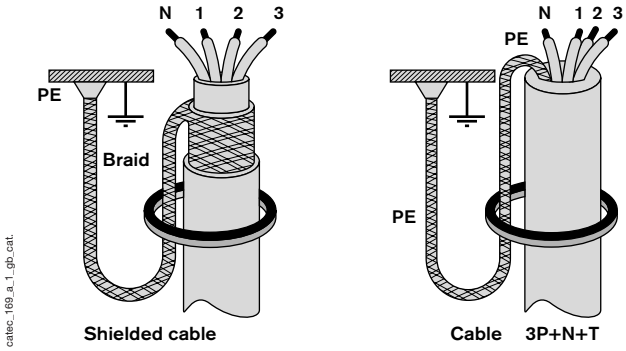

This document is not a contract. SOCOMEC reserves the right to modify features without prior notice in view of continued improvement. 2008 - 2009

Installation (continued)

Choice of the class of differential devices according to loads

Equipment is increasingly fitted with rectifying devices (diodes, thyristors,…). Earth fault currents downstream of these devices have a DC component capable of desensitising the RCD.

Differential devices must be of the class suited to the loads (see chapter on definition of classes).

Standard EN 50178 stipulates the following organisational diagram which defines requirements when using EE behind a differential device (EE: electronic equipment).

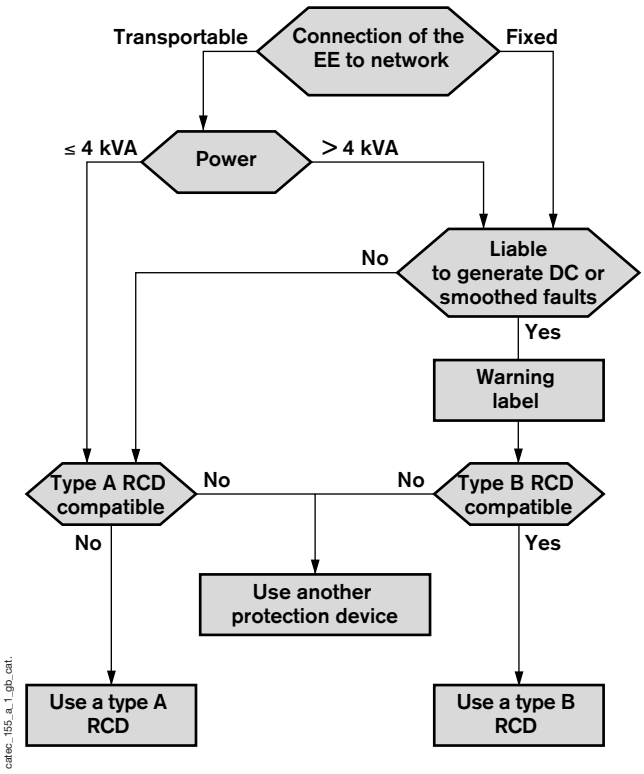

Transportable EE whose rated apparent input power does not exceed 4 kVA, must be designed to be compatible with type A RCDs (protection against direct and indirect contacts).

Any EE which risks generating fault current DC component risking interfering with the operation of the differential protective devices must be accompanied by a warning label which says so.

When the RCDs cannot be compatible with the EE to be protected, other protection measures must be adapted such as: isolating the EE from its environment by double or reinforced insulation, or insulating the EE from the network using a transformer, etc.

"Industrial" loads

The most common devices are of AC class, but the real situation of industrial installations justifies the use of at least, A class devices.

Speed variator type loads

As this type of load fluctuates considerably, class B relays, independent of the voltage and current, will be even more particularly suited to prevent risks of spurious tripping.

Grouping of uses according to the type of load

Installations must group together the types of devices which cause identical faults.

If loads are liable to generate DC components, they must not be connected downstream of devices intended to protect loads generating, in fault, only AC or pulsed rectified components.

Signalling or pre-alarm of a leakage or fault

In installations where continuity of operation is imperative and where the safety of property and people is particularly at risk, insulation faults constitute a major risk that it is particularly important to take into account.

This signalling function may be performed in two ways:

1. the automatic breaking of the power supply for imperative reasons of protection (protection against direct, indirect contacts, or limiting the leakage current) is provided by differential devices, the signalling function may be provided by the pre-alarm relays which are incorporated in certain differential relays (RESYS M40, P40, B,… of SOCOMEC).
2. the automatic breaking of the power supply for imperative reasons of protection (protection against direct, indirect contacts, or limiting leakage current) is provided by other devices, such as for example overcurrent protection devices. The alarm contact of the relays (RESYS M, P, E… of SOCOMEC) can then be used only to signal a differential current.

Preventive signalling of insulation faults provides infinite possibilities in the optimisation of an electrical installation:

- anticipating a machine repair before the process is stopped or on fault,
- locating insulation faults in TNS neutral loads,
- preventing risks of fire, explosion, etc.,
- anticipating the operation of an overcurrent protection device and thus avoiding the replacement of the fuse or the aging of the circuit breaker,
- controlling the leakage currents and thus reducing the homopolar currents in the protection circuits, generating of particularly disturbing electromagnetic fields,
- etc.

This document is not a contract. SOCOMEC reserves the right to modify features without prior notice in view of continued improvement. 2008 - 2009

General points

Introduction

Standard IEC 60364 impose the use of a permanent Insulation Monitoring Device (IMD) in IT arrangements:

"a permanent insulation monitoring device must be designed to indicate the first occurrence of a live mass or earth fault; it must trigger an audible or visual signal".

IMDs can also be used in many other applications (see uses on page D.68). SOCOMEC offers a wide choice of IMDs from the ISOM range.

Operating principle

The majority of IMDs inject a measuring current in the loops formed by the live conductors and the earth (fig.1). An increase in measuring current signifies a circuit insulation decrease. Measuring current is compared with the IMD alarm threshold.

Correct IMD operating in the ISOM range does not require a high measuring current.

A 1 kΩ impedance normally added between the circuit to be monitored and the earth (impeding neutral) is practically unnecessary for the SOCOMEC IMDs.

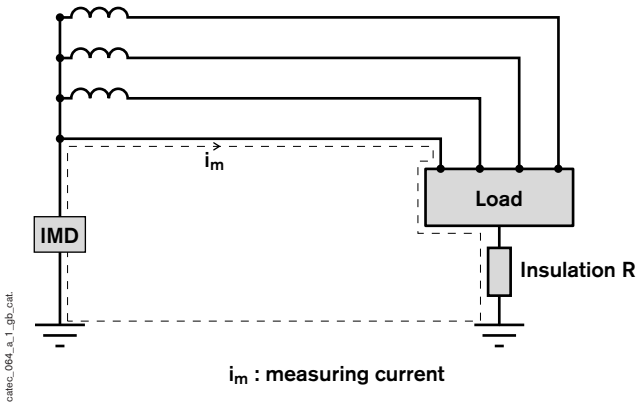

Fig. 1: measurement of an installation's insulation resistance by an IMD

Adjustments

When an IMD is put into service in an installation, account must be taken of the fact that this device is going to measure the overall insulation of the installation, that is the sum of the individual leakage resistances of each feeder.

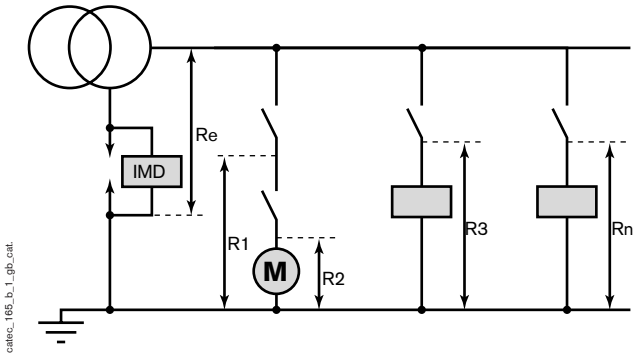

$$\frac{1}{Re} = \frac{1}{R1} + \frac{1}{R2} + \frac{1}{Rn} \quad (R1, R2, Rn \geq 0.5\ M\Omega)$$

Note: the IMD can indicate a decrease of insulation resistance without there being a dead short fault (presence of humidity after prolonged switching off, for example). Installation start-up will restore the level of insulation (IEC 60 364).

This document is not a contract. SOCOMEC reserves the right to modify features without prior notice in view of continued improvement. 2008 - 2009

Definitions

Split network

A split network is characterised by:
- a single receptor or same type receptors (motors, safety lighting…),
- a moderately extended circuit (low earth leakage capacitance) and clearly located circuit (workshop, operating theatre…),
- a well-defined circuit (only AC or DC loads).

Global network

Conversely, a global network has various receptors and rectifiers (with AC and DC currents). The network is often an extended one (high earth leakage capacitance).

Asymmetrical fault (DC network)

An asymmetrical fault only affects one of the network's polarities.

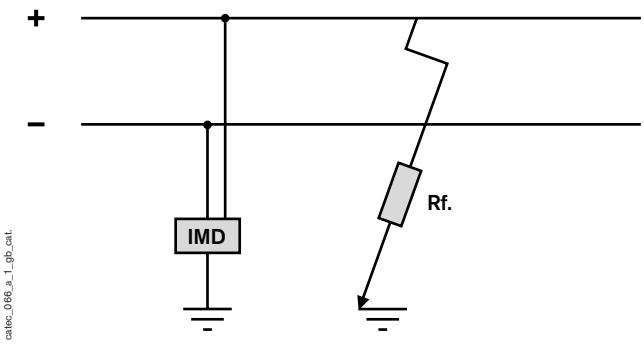

Fig. 1: asymmetrical fault

Symmetrical fault (network DC)

A symmetrical fault affects both polarities of the network. This type of fault often develops in circuits where the respective lengths of the + and – conductors are comparable.

Since the end of 1997 standards IEC 61557-8 and EN 61557-8 have required that DC circuits be monitored by IMDs capable of detecting symmetrical faults.

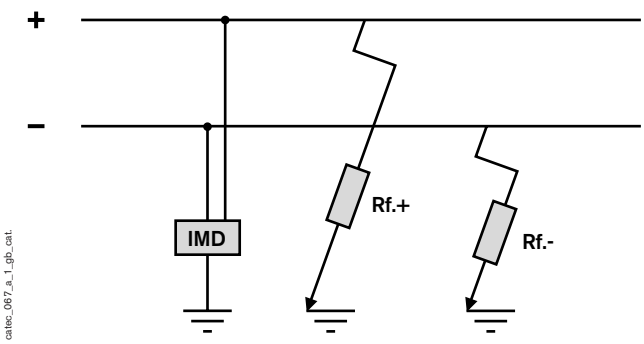

Fig. 2: symmetrical fault

Insulation resistance of the electrical installation

This is installation's insulation level with regard to the earth. It must be regularly measured by the supervisory agencies and must be greater than the values of standard IEC 60 364.

Table A: Minimum insulation resistance values (IEC 60364) with power off.

CIRCUIT NOMINAL VOLTAGE (V)	DC TEST VOLTAGE (V)	INSULATION RESISTANCE (MΩ)
TLVS and TLVP	250	≥ 0.25
≤ 500 V	500	≥ 0.5
> 500 V	1000	≥ 1.0

Receptor insulation

- Rf Motor > 0.5 MΩ.
- Rf > x MΩ according to product standard.

Conductor earth leakage capacitance

When two conductors have a potential difference (voltage), there is a capacitive effect between them according to their geometric shape (length, shape), to the insulation (air, PVC…) and to the distance between them.

This physical characteristic can trigger a capacitive leakage current between network conductors and the earth. The more extended the network, the higher the current will be.

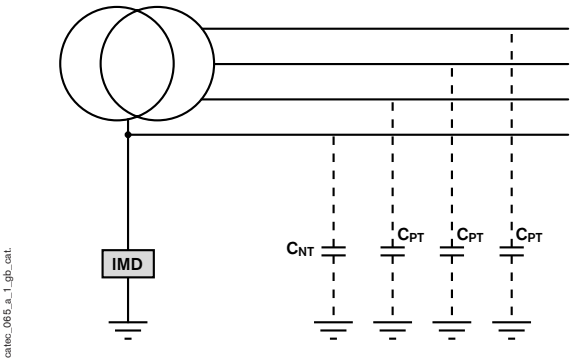

Fig. 2: earth leakage capacitance on an AC network

Maximum earth leakage capacitance

This is the sum of the network's earth leakage capacitance and of the capacitance of the capacitors installed in the electronic equipment, computer equipment…

Maximum earth leakage capacitance is an important parameter when choosing an IMD. It should be noted that the overall leakage capacitance has considerably increased due to EMC filters.

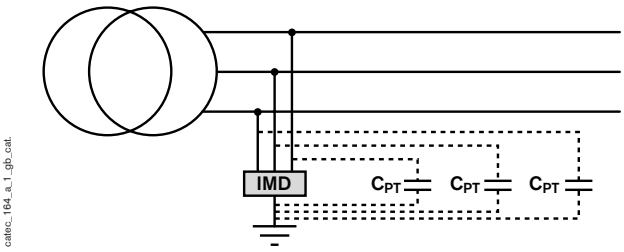

This document is not a contract. SOCOMEC reserves the right to modify features without prior notice in view of continued improvement. 2008 - 2009

Example of use

Monitoring the insulation of dead motors (example IMD SP 003)

Monitoring the insulation of dead motors is a preventive measure when equipment safety and availability requirements are obligatory:
- safety equipment: fire fighting motors,
- smoke extractor installations,
- critical cycles in industrial processes,
- strategic or large motors.

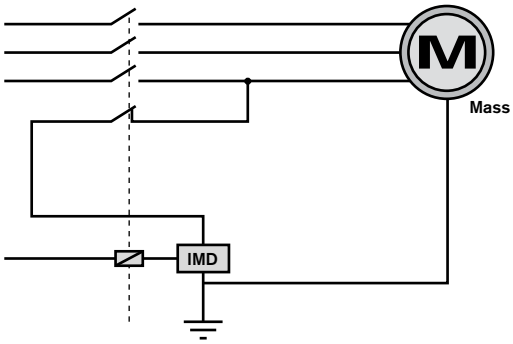

catec_069_a_1_gb_cat.

Fig. 2: assembly principle: the IMD is off circuit when the motor is supplied

Adjustment of the IMD monitoring a dead motor
The IMD must generate an alarm when insulation resistance is less than 1 MΩ (1000 kΩ).
The motor must not be used when insulation resistance is less than 500 kΩ.
Type SP IMDs are specially designed for the monitoring of the insulation with the power off, and are also a means of rapidly locating transient faults thanks to their memory function (examples: points motors, rapid process port cranes).

Monitoring speed variators

The monitoring of speed variators must take into account the low frequencies they generate.

Only IMDs and search devices with measuring principles using coded signals or signals different to those generated by the variators, can, over time, correctly perform their function.

Mobile generator sets

Protecting circuits supplied by mobile generator sets is often difficult to organise because earthing is not possible (portable sets, emergency rescue, etc), or because earthing is not considered valid (resistance impossible to measure, etc.).

This sort of protection is often provided by 30 mA RCDs which has the disadvantage of spurious tripping (see page D.63). In cases where continuous operation is imperative for safety reasons, an IMD may be used (see fig. 3).

The set mass is not linked to the generator mid-point, but to the network consisting of the interconnected masses of the equipment. The IMD is inserted between this mass and a phase.

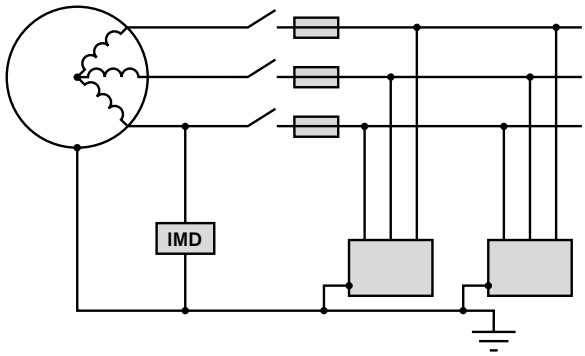

catec_071_b_1_gb_cat.

Fig. 3: use of an IMD for a circuit supplied by generator sets

Monitoring feeders with high disturbance by DLD

Low frequencies
Fault location in this type of circuit is controlled by the synchronisation of the search current injections and the analyses by the locators.

High frequencies
The central locator has measurement validation function by renewing analysis cycles on request.

High homopolar currents
DLD toroids are equipped with levelling diodes controlling potential overvoltages on the secondary.

This document is not a contract. SOCOMEC reserves the right to modify features without prior notice in view of continued improvement. 2008 - 2009

Examples of use (continued)

Networks supplied by UPS

Networks supplied by UPS
Static Uninterruptible Power Supply systems comprise a DC component.

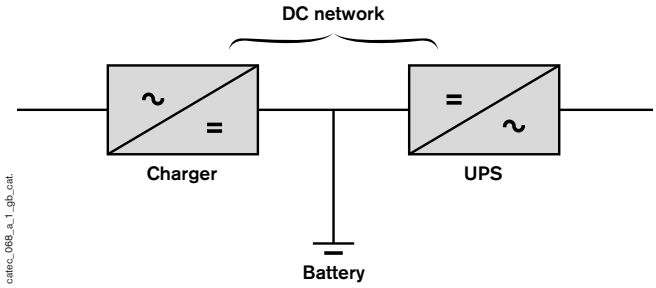

Fig. 3: IMD on network supplied by UPS

It is required that the installation supplied by DC current be grouped together in the same area so as to ensure protection of masses by equipotentiality. When it is not possible to apply this requirement, an IMD must be installed to monitor the installation's correct insulation when supplied by DC current.

Other general criteria for UPS installation

- Not having, at the same time, two IMDs monitoring networks that are galvanically interconnected (particularly in the by-pass phases).
- Providing for the installation of an IMD adapted to the network monitored.

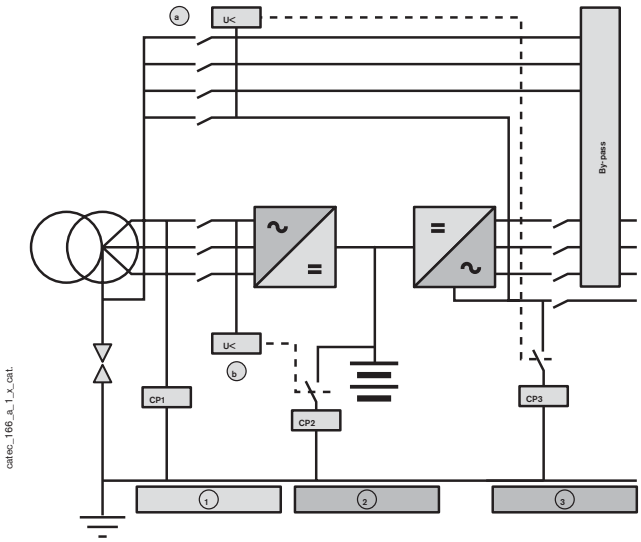

1. IMD which can monitor circuits with DC components and high leakage capacitances.
2. IMD which can monitor DC circuits with symmetrical faults.
3. IMD which can monitor AC circuits, note (a) and (b), control system avoiding the use of IMDs in parallel on networks not galvanically insulated.

Monitoring of control and signalling circuits

These circuits, generally supplied by isolating transformers, must ensure non-spurious tripping of power circuits. A common solution, proposed by standards and regulations is to have a wiring system with a TN arrangement (common point coil linked to earth). Another possibility meets these requirements by integrating the secondary's non-connection to earth combined with an IMD.
This solution presents shunting risks on actuators due to an insulation fault. This fault may be both sufficient for controlling actuators and too weak to trip an overcurrent protection.

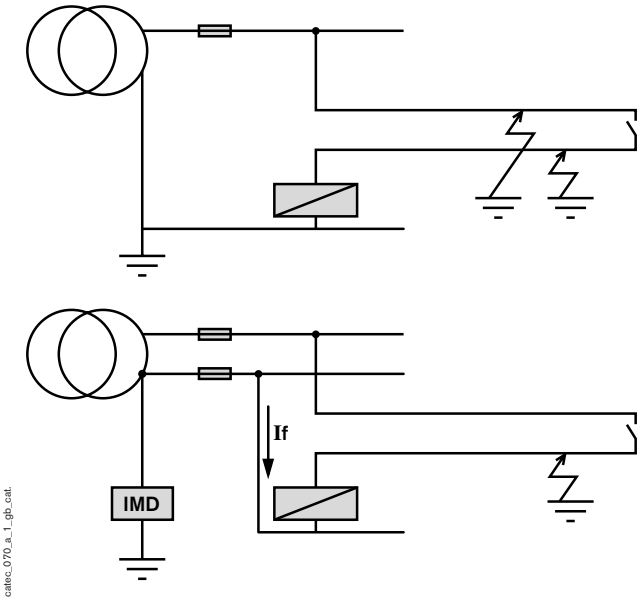

Fig. 1: monitoring insulation on control circuits

These risks are greater on new equipment for two main reasons:
- operating voltages are low and do not facilitate fault detection,
- control auxiliaries' operating thresholds are increasingly sensitive, to a few tens of mA (micro-relay, PLCs, optocouplers, etc).

Compared to an earthed solution, using an insulated network linked to an IMD offers the double advantage of not tripping at the first fault, and providing preventive monitoring of equipment ageing.

IMD adjustment

$$Zm = \frac{U}{ir}$$

U: control circuit maximum supply voltage.
Ir: smallest relay dropout current.
Zm: IMD adjustment impedance.

Fault search systems such as DLD204 and the portable DLD3204 system allow preventive location of insulation faults, without changing the status of the actuators or operating controls thanks to a search current limited to 1mA.

This document is not a contract. SOCOMEC reserves the right to modify features without prior notice in view of continued improvement. 2008 - 2009

IMD connection

General case

Connecting an IMD is normally done between the transformer neutral point located at the IT installation origin and the earth.
The installation must have an alarm device and an overvoltage protection (if HV/LV transformer).
Using ISOM IMDs does not require an impedance of 1 kΩ in parallel (see operating principle page D.66).

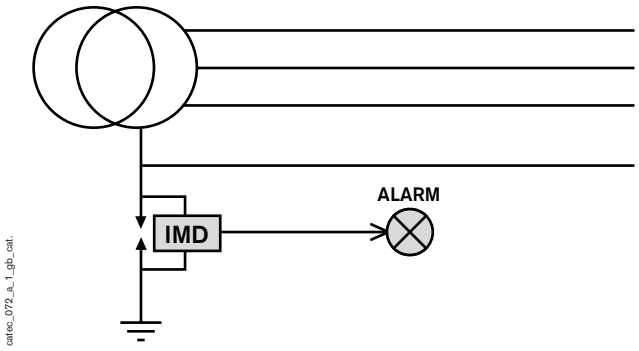

Fig. 1: IMD connection: general case

Power supply by several transformers in parallel

- If transformers are always designed to operate in parallel, one IMD is enough.
- If the transformers can operate independently of each other, each transformer must be equipped with an IMD (see figure below), and a control system that prevents both IMDs from operating when the networks are coupled must also be installed.

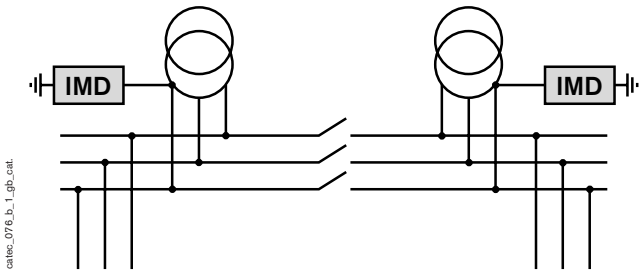

Fig. 6: several transformers in parallel

Monitoring a dead network

Using an artificial neutral

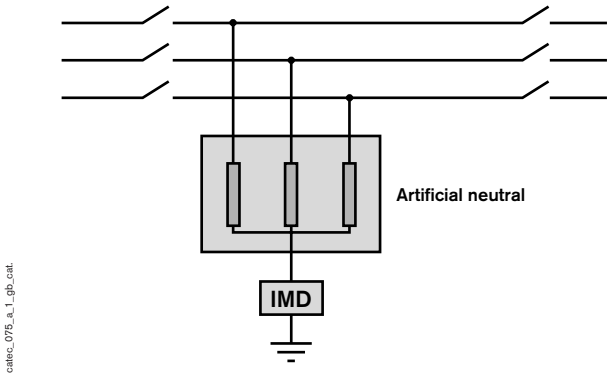

Fig. 5: monitoring of a dead network

Connection and protection of IMD measuring circuits

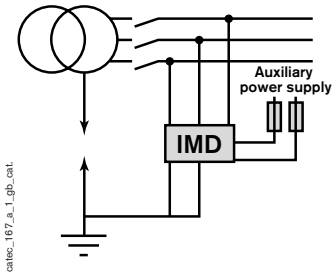

Fig. 3: IMD connection after the master switch

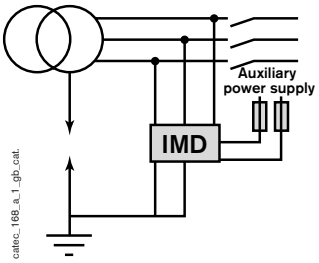

Fig. 4: IMD connection before the master switch

Protection against short circuits is currently not permitted by IEC 60 364 in order to avoid a risk of non-measurement, but supposes an appropriate installation to avoid short circuit risks (no passing of conductors over sharp busbar edges and over insulated conductors).
Self-monitoring of the network connection of most SOCOMEC IMDs makes the above provision unnecessary:
- connection of the IMD before the transformer coupling switch, avoids control systems between IMDs where the networks are coupled (fig. 4),
- connection of the IMD after the transformer coupling switch, allows preventive measurement on the dead network (measuring signal present on the phases and not requiring looping via the transformer windings) (fig. 3).

Neutral accessibility

In this case, the IMD is inserted between the transformer neutral and the nearest mass earth connection or if not the neutral earth connection.

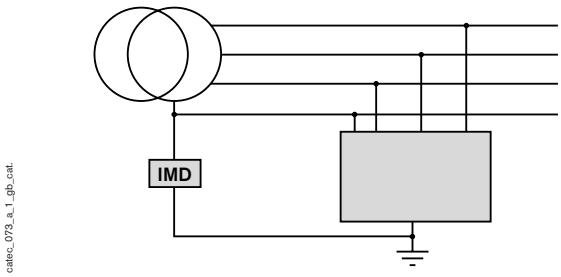

Fig. 2: IMD connection: inaccessible earth

This type of connection also avoids the installation of protection on the measuring conductor in IMD (short circuit-type overcurrents being improbable).

Auxiliary power supply connection

Certain IMDs have an auxiliary power supply. This makes them insensitive to voltage variations. The auxiliary power supply inputs must be protected:

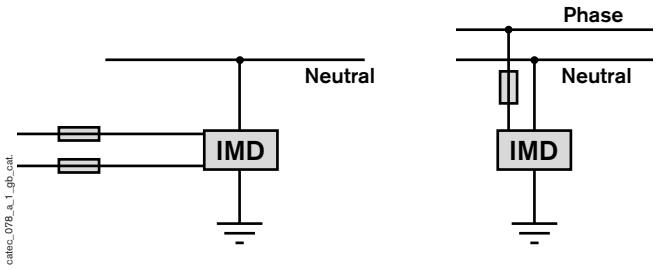

Fig. 7: auxiliary power supply connection

This document is not a contract. SOCOMEC reserves the right to modify features without prior notice in view of continued improvement. 2008 - 2009

Enclosures

Thermal effects

Device power dissipation

Nominal powers are given for Ith current (nominal rating in the table below).
For the device's operational current:

$$P = P_N \times \left[\frac{I_e}{Ith}\right]^2$$

P: power dissipation in W.
PN: nominal power dissipation in W (see table below).
Ie: device's operational current
Ith: device rating.

Thermal characteristics

Calculation of temperature rise

$$\Delta\Delta T\ (°K) = \frac{P\ (W)}{K \times S\ (m^2)}$$

P: power dissipation inside enclosure (equipment, connections, cables, etc.).
ΔT: temperature rise in °K.
S: enclosure surface area (not counting surfaces in contact with walls or other obstacles).
K heat exchange coefficient.
K = 4 W/m² °C for polyester enclosures.
K = 5.5 W/m² °C for metal enclosures.
When the cubicle or enclosures are fitted with air admission, apply standard IEC 890 for the calculation, or consult us.

Calculating ventilation
Where there is forced ventilation, the air flow necessary D is:

$$D\ (m^3/h) = 3.1 \times \left[\frac{P}{\Delta T} - (K \times S)\right]$$

Ventilators are offered as accessories in the CADRYS range.

Heating resistor determination
This is necessary when interior condensation must be avoided inside the enclosure. The resistor power Pc is given by:

$$Pc\ (W) = (\Delta T \times K \times S) - P$$

Heating resistor powers offered in the CADRYS range are:
15 W - 30 W - 45 W - 75 W e 150 W.

Air/air exchanger determination: see page D.72

Air conditioning determination: see page D.72.

Example

A cubicle consists of a master switch (FUSERBLOC 4 x 630 A) and several cable leadouts. Nominal current is 550 A.

- Power dissipation at 630 A (table below): 97.7 x 3 = 293 W.
- Power dissipation at 550 A: $293 \times \left[\frac{550}{630}\right]^2 = 223$ W.

Total power in the cubicle (equipment, cables, etc.) reaches 400 W.
Cubicle dimensions: H = 2000 mm, D = 600 mm, L = 800 mm.
The cubicle is placed between two others and against a wall.
The free surface area is:
S (m2) = 2 x 0.8 (front) + 0.6 x 0.8 (top) = 2.08 m²

- Temperature rise in cubicle:

$$\Delta T = \frac{400\ W}{5.5 \times 2.08\ m^2} = 35\ °C$$

For an ambient temperature of 35 °C, the following is obtained:
T = 35 °C + 35 °C = 70 °C
To maintain a maximum temperature T of 55 °C (ΔT = 20 °C), the following ventilation flow is necessary:

$$D = 3.1 \times \left[\frac{400}{20} - 5.5 \times 2.08\right] = 26.5\ m^3/h$$

Polyester enclosures

These enclosures can be used in public buildings. The French ministerial decree of 25.06.80 requires auto-extinguishing casings (resistant up to 750 °C minimum with glowing wire according to NF C 20-445).

ENCLOSURE TYPE	COMBIESTER COVER		MINIPOL	MAXIPOL
	TRANSPARENT	OPAQUE		
Glowing wire withstand	960 °C	850 °C	960 °C	960 °C

Protection against thermal effects

(According to IEC 60 364)
To avoid any risks due to thermal effects during normal service (fire, burns, overheating), the following can be used:
- differential devices in TT and TN arrangements,
- insulation Monitoring Devices in IT arrangements.
Furthermore, the temperature of electrical equipment is limited to the values in the table below:

ACCESSIBLE COMPONENTS	MATERIAL	Max. temp.(°)
Manual controls	Metallic Non-metallic	55 65
Parts designed to be touched but not held	Metallic Non-metallic	70 80
Parts not designed to be touched during normal service	Metallic Non-metallic	80 90

Power dissipation in W/pole for each piece of equipment

Ratings (A)	32	40	50	63	80	100	125	160	200	250	315	400	500	630	800	1000	1250	1600	1800	2000	2500	3150	4000
SIRCO	-	0.6	-	2	2.6	3	1.8	3	4	5.8	7.6	10.8	16	30.9	39.2	45	85	122	153	178	255	444	916
SIRCO VM	0.9	1.3	-	1.2	2.1	3.1	5.7	3.3	5.8	-	-	-	-	-	-	-	-	-	-	-	-	-	-
SIDER	-	-	1	-	2.9	-	1.5	-	3.4	-	-	12.9	17	20.7	32	-	42.5	102	-	-	-	-	-
SIDERMAT	-	-	-	-	-	-	-	-	-	8.2	-	15.6	-	45	66.4	-	80	113	-	-	-	-	-
FUSERBLOC	4.7 (CD)	-	7.3	9	-	14.5	20	23	25.4	41	-	60	-	100	143.4	-	215	-	-	-	-	-	-
FUSOMAT	-	-	-	-	-	-	-	-	-	30.3	-	50	-	83.5	-	-	222	-	-	-	-	-	-

This document is not a contract. SOCOMEC reserves the right to modify features without prior notice in view of continued improvement. 2008 - 2009

Enclosures

Thermal calculation of enclosures

Hypothesis

a) Define the maximum internal temperature at the enclosure, which is imposed by the most sensitive component

b) Define the maximum internal temperature of the ambient air (outside the cubicle)

c) Define the enclosure dimensions

where Ti (°C) = Internal temperature
Ta (°C) = Ambient temperature
H - L - P (m) = Height - Width – Depth

Power contributed by the components

SOCOMEC Equipment

See detail of dissipated powers at nominal current (page D.71).

$$Pd = Pnom \times \left[\frac{I_e}{Ith}\right]^2$$

Where Pnom (W): Nominal power
Pd (W): Power dissipation at operational current
Ie (A): Operational current
Ith (A): Nominal current

Corrected exchange surface

a) Define the correction factor Kn (depends on the method of installation)

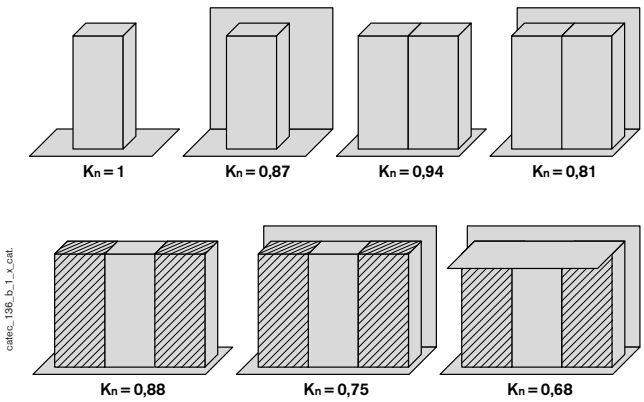

b) Corrected surface area

$$S = Kn\,(1.8 \times H \times (L + P) + 1.4 \times L \times P)$$

Power necessary to maintain the temperature in the enclosure

$$Pn\ (W) = Pd - K \times S \times (Ti\ max - Ta\ max)$$

Where K = 5.5 W/m² °C for a painted sheet metal enclosure
K = 4 W/m² °C for a polyester enclosure
K = 3.7 W/m² °C for a stainless steel enclosure
K = 12 W/m² °C for an aluminium enclosure
Pn (W): Power necessary

Choice of adjustment method

a) Ventilation

Choose the ventilator whose flow is just above the value calculated.

Note: this solution is only possible if Ti max - Ta max > 5 °C

$$Flow\ (m^3/h) = \frac{3.1 \times Pn}{Ti\ max - Ta\ max}$$

b) Air/air exchanger

Choose the exchanger whose specific power is just above the value calculated.

Note: this solution is only possible if Ti max - Ta max > 5 °C

$$Specific\ power\ (W/\ °K) = \frac{Pn}{Ti\ max - Ta\ max}$$

c) Air conditioner

Choose the air conditioner whose refrigerating power is just above the power necessary (Pn) (see table page D.71).

d) Heating resistor

Choose the heating resistor whose power is just above the value calculated.

$$Pc\ (W) = [(Ti\ max - Ta\ max) \times K \times S] - Pn$$

This document is not a contract. SOCOMEC reserves the right to modify features without prior notice in view of continued improvement. 2008 - 2009

Busbars

Choosing bar material

Table A: physical constants of copper and aluminium

	COPPER	ALUMINIUM
Standards	C31-510 and A51-434	C31-520, HN 63 J 60, CNET 3072-1. quality 6101T5
Type	Semi-hard	Alloy Al Mg If tin-plated 15 µm
Apparent density	8890 kg/m³	2700 kg/m³
Linear expansion coefficient	17 x 10^{-6} per °C (17 x 10^{3} mm/m)	23 x 10^{-6} per °C (23 x 10^{-3} mm/m)
Minimum resistance to fracture	250 N/mm²	150 N/mm²
Resistivity at 20 °C	≤ 18 MΩ mm²/m	≤ 30 MΩ mm²/m
Elastic modulus	120 000 N/mm²	67 000 N/mm²

Determination of peak I_{sc} according to rms I_{sc}

Table B

According to EN 60439-1

RMS VALUES OF SHORT CIRCUIT CURRENT	n
I ≤ 5 kA	1.5
5 kA < I ≤ 10 kA	1.7
10 kA < I ≤ 20 kA	2
20 kA < I ≤ 50 kA	2.1
50 kA < I	2.2

$$\text{Peak } I_{sc} = n \times \text{rms } I_{sc}$$

Thermal effect of short circuit

Short circuit currents cause the busbar temperature rise. The busbar's final temperature must be lower than 160 °C so as not to damage the busbar support. The thermal constraints must be such that:

$$(I_{sc})^2 \times t \leq K_E^2 S^2$$

I_{sc}: rms short circuit current in A
t: short circuit duration (generally equal to protection device operating time).
S: busbar section in mm²
K_E: coefficient given in table C in relation to busbar temperature Tf in normal operating conditions (before short circuit).

Table C

Tf	40	50	60	70	80	90	100	110	120	130
K_E	134.1	127.3	120.4	113.3	106	98.4	90.4	82	72.8	62.6

Electrochemical coupling

To avoid excessive temperature rise due to electrochemical coupling (corrosion), connecting conductors having electrochemical potentials greater than 300 mV must be avoided (see table D).

Example:
An aluminium busbar cannot be directly connected to a copper busbar. Therefore, inserting a tin-plated aluminium busbar is necessary:
- Alu/Tin → YES,
- Tin/Copper → YES.

Table D

	SILVER	COPPER	ALUMINIUM	TIN	STEEL	BRASS	NICKEL
SILVER	YES	YES	NO	NO	NO	YES	YES
COPPER	YES	YES	NO	YES	NO	YES	YES
ALUMINIUM	NO	NO	YES	YES	YES	NO	NO
TIN	NO	YES	YES	YES	YES	YES	NO
STEEL	NO	NO	YES	YES	YES	NO	NO
BRASS	YES	YES	NO	YES	NO	YES	YES
NICKEL	YES	YES	NO	NO	NO	YES	YES

This document is not a contract. SOCOMEC reserves the right to modify features without prior notice in view of continued improvement. 2008 - 2009

UNINTERRUPTIBLE POWER SUPPLIES

The availability of high quality energy

EQUIPMENT AND SERVICES FOR YOUR HIGH QUALITY POWER SUPPLY

Teams of specialised designers, highly integrated production and a dedicated commercial network have all helped SOCOMEC to forge the most complete ranges of high quality power supplies, industrial switching and protection components, on the market.

Marketed under the SOCOMEC UPS brand, our range of products and services fulfils all your needs for a quality, continuous electrical power supply. UPS, secure power supplies, static transfer systems, harmonic equalisers, rectifiers, DC/AC converters, covering a very wide range of applications for every sector of the market.

They have gained approval from the most demanding of users: telecoms operators, the nuclear industry, naval industry.

GAMME 008 N

NeTYS range

GAMME 037 B

NeTYS PE 400-600-800-1000 VA
NeTYS PL 550-750 VA
NeTYS PR 1000-1500-2000-3000 VA

> Distinctive features

Simplified installation and easy to use.
Full and intuitive communication panel for the various functions.

NeTYS	PE	PL	PR
Simplified battery maintenance (user replaceable)		•	•
Application connection with Schuko/IT/FR/BS plugs		•	
Application connection with IEC 320 plugs (computer standard)	•		•
Protection of the telephone or data line	•	•	•
Advanced RS232 and/or USB connection	•	•	•
Mounted on 19" rack			•
Software for local shutdown	•	•	•
Remote shutdown software and Web/SNMP manager adaptor			•
Extension of back-up time			•

UPS-ENTERPRISE range

GAMME 036 B

UPS-ENTERPRISE 800 VA
UPS-ENTERPRISE 1000 VA
UPS-ENTERPRISE 1500 VA
UPS-ENTERPRISE 2000 VA

> Distinctive features

Digital architecture providing precision and compact size. Great flexibility of installation for the 1500 and 2000 VA models, which can be floor-mounted or in a 19" rack cabinet.

UPS-ENTERPRISE	800	1000	1500	2000
Application connection with IEC 320 plugs (computer standard)	•	•	•	•
Advanced RS232/USB connection	•	•	•	•
Software for local/network shutdown or Web/SNMP manager adaptor	•	•	•	•
Automatic by-pass	•	•	•	•
Automatic battery test	•	•	•	•
External battery cabinet for extension of back-up time	•	•	•	•
Simplified battery maintenance (hot swap)			•	•
Mounted on 19" rack		•	•	•

MODULYS range

GAMME 011 B

MODULYS SA stand alone 3000-4500-6000 VA
MODULYS RM modular for 19" rack installations from 1.5 to 9 kVA
MODULYS MC modular from 1.5 to 24 kVA
MODULYS EB modular from 9 to 24 kVA
MODULYS TC stand alone/modular from 3 to 9 kVA

> Distinctive features

Migration Concept. Innovative functionality that allows the Stand Alone Tower/Rack model to be integrated and connected in parallel in a system cabinet for future system expansion.

MODULYS	SA	RM	MC	EB	TC
Modular, scalable and redundant		•	•	•	•
Migration Concept	•				
Mounted on 19" rack	•	•			
Application connection via terminals (3 kVA SA IEC 320 16 A plug)	•	•	•	•	•
External battery cabinet for extension of back-up time	•	•	•	•	•
Software for local/network shutdown or Web/SNMP manager adaptor	•	•	•	•	•

This document is not a contract. SOCOMEC reserves the right to modify features without prior notice in view of continued improvement. 2008 - 2009

MASTERYS range

MASTERYS BC stand alone from 8 to 20 kVA
MASTERYS MC stand alone from 10 to 120 kVA
MASTERYS IP stand alone with isolation transformer from 10 to 40 kVA
MASTERYS EB modular from 2 x 15 to 3 x 30 kVA

> Distinctive features

Always-ON Mode: energy saving - EBS - battery pack management - GSS - integration of the UPS with generator sets - Energy Saver - energy saving in parallel configuration.

MASTERYS	BC	MC	EB	IP
Modular, scalable and redundant			●	
Three-phase or single-phase (Combi Concept)	●			
Sinusoidal absorption		●	●	●
Parallelable	●	●		●
Integrated LAN connection		●	●	●
Software for local/network shutdown or Web/SNMP manager adaptor	●	●	●	●
Redundant batteries		●(1)	●	●
Input/output galvanic isolation transformer supplied as standard				●

(1) MC 10 to 80 kVA only.

DELPHYS range

DELPHYS DS from 20 to 60 kVA
DELPHYS MP from 60 to 200 kVA
DELPHYS MP elite from 60 to 200 kVA
DELPHYS MX from 250 to 500 kVA
DELPHYS MX elite from 250 to 500 kVA
DELPHYS DS 600 and 800 kVA

> Distinctive features

Maximum power density on a minimum footprint.
Innovative solutions to eliminate harmonics and rephrase the input.

DELPHYS	DS 20/60	MP	MP elite	MX	MX elite	DS 600/800
Low harmonic distortion value (THDi up to 3 %)			●		●	●
High input cosPhi (close to 1)			●	●	●	
Power supply for capacitative loads up to 0.9 without active power derating		●	●	●	●	●
Power supply of deforming loads without derating	●	●	●	●	●	●
High short-circuit current output to facilitate selectivity	●	●	●	●	●	●
Galvanic isolation between d.c. circuit and consumers	●	●	●	●	●	●
Parallelable up to 6 units (centralised or distributed parallel)	●	●	●	●	●	●
Perfect compatibility with static transfer systems (ACS synchronisation)	●	●	●	●	●	●
Control of command with optional touch screen		●	●	●	●	
Vast choice of remote control systems	●	●	●	●	●	●

CPSS EMergency

MODULYS EM from 3 to 6 kVA
MASTERYS EM from 15 to 80 kVA
DELPHYS EM elite from 100 to 200 kVA

Centralised power supply systems are designed for buildings subject to fire safety regulations. They comply with EN 50171.

The CPSS are designed chiefly to supply emergency lighting in the event of a failure in the normal power supply, but can also be used to supply other emergency systems, for example:
- automatic fire extinguishing installations,
- emergency detection and warning units,
- smoke extraction equipment,
- carbon monoxide detection systems,
- specific safety installations in sensitive areas.

> Operating modes

- Changeover mode.
- Mode without interruption.
- Changeover mode with additional control switching device for central and partial switching of the load (on request).
- Non-maintained changeover mode.

This document is not a contract. SOCOMEC reserves the right to modify features without prior notice in view of continued improvement. 2008 - 2009

> Harmonic compensators *ATRYS*

ATRYS 014 A

- For applications from 15 kVA to 240 kVA.
- Increases the life of installations.
- Improves the power factor of an installation.
- Reduces electricity consumption.

> Rectifiers/Inverters *SHARYS & PHASYS*

GAMME 021 B

- For industrial and telecom application.
- Rectifiers from 7.5 to 600 A.
- Inverters from 1.5 to 18 kVA.
- Expandable modular systems.
- High reliability and uninterrupted service.
- Mixed solution 48 V DC/230 V AC systems.

> Static transfer systems *IT-SWITCH* and *MTC*

MTC 010 D - IT_043_A - IT_040_A

- STS from 16 A to 4800 A.
- Redundancy starting from two power supply sources.
- Automatic and manual transfer.
- Choice of the source of primary energy.

COMMUNICATION SOFTWARE

VISIO 008 B

> Solutions adapted to your IT architecture

> Management of supplied applications

- Management and monitoring SOCOMEC UPS software give users significant advantages in terms of control.
- They make it possible to monitor the main parameters and carry out a shutdown of servers in the event of supply network power outage.

Software	*UNI VISION*	*UNI VISION PRO*	*NET VISION*	*TOP VISION*
Connection via RS232 serial port	•	•		
Connection via RS485 serial port				•
Connection 10/100 Mbps Fast Ethernet RJ45			•	
Compatible with Windows™	•	•	•	•
Compatible with Unix, AIX, Solaris, Linux, AS 400 OS		•	•	
Compatible with SNMP standard protocol			•	
Automatic shutdown of the local Server/PC	•	•		
Automatic shutdown of clients: networked Server/PC		•	•	
Simplified graphic display (Web browser HTTP)	•	•	•	•
History Log of electric measurements, alarms and events			•	•
Notification of events to customized e-mail addresses	•	•	•	

COMMISSIONING, INSPECTION AND MAINTENANCE

> For the availability of your energy needs

Given the impact a continuous supply has on the availability of your electrical power, the quality of the service is just as important as the quality of the product.

> Specialists at your service

The CIM (Commissioning Inspection and Maintenance) has a strategic presence worldwide. It engages more than 250 SOCOMEC UPS specialists, maintenance engineers and technicians.

They are available to you for:
- preventive maintenance,
- remedial maintenance,
- 24 hours availability,
- consultancy, design and implementation of installation modifications and updates.

This document is not a contract. SOCOMEC reserves the right to modify features without prior notice in view of continued improvement. 2008 - 2009

Customer service on-line

Find out more about the SOCOMEC Group's products and services on our web site: www.socomec.com

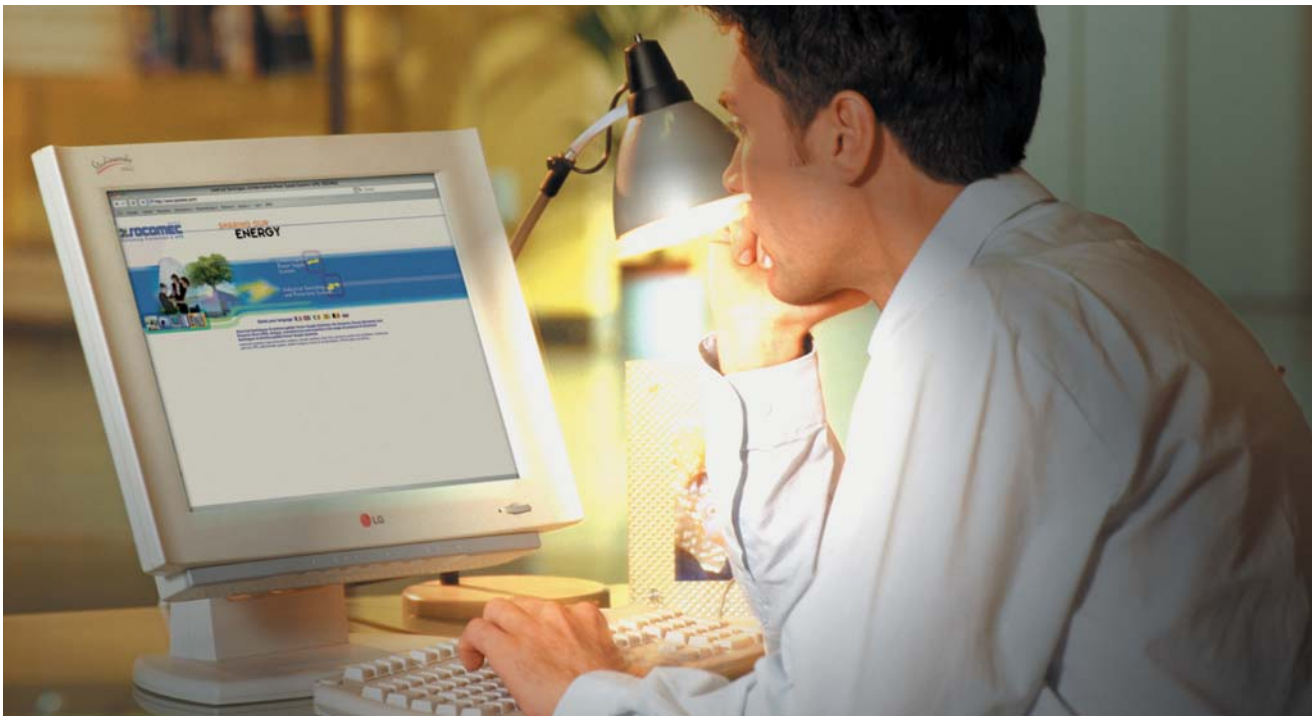

APPLI 120 A

> Find out more about solutions and customer service

with the SOCOMEC Group.

> Download or order

any of our sales and technical documentation, especially our popular Application Guide (full version or selected chapters).

> Download dxf diagrams

for Autocad and other CAM applications for precise layout of SOCOMEC products in your electrical diagrams.

APPLI 121 B

APPLI 122 A

CORPO 127 A

> "No-fuss" on-line calculation for your busbars

withstand current, distance between supports, plus other SOCOMEC applications.

> Find full details

of our sales network around the world.

> Job opportunities

be part of a dynamic and growing Group.

This document is not a contract. SOCOMEC reserves the right to modify features without prior notice in view of continued improvement. 2008 - 2009

A worldwide presence

> Representative network

Africa
- Algeria
- Egypt
- Morocco
- Nigeria
- South Africa
- Tunisia

America
- Argentina
- Brazil
- Canada
- Chile
- Guadeloupe
- Martinique
- Mexico
- Peru
- Uruguay
- USA
- Venezuela

Asia
- Azerbaijan
- Cambodia
- China
- Hong Kong
- India
- Indonesia
- Japan
- Kazakhstan
- Korea
- Malaysia
- Philippines
- Singapore
- Sri Lanka
- Taiwan
- Thailand
- Vietnam

Europe
- Austria
- Bulgaria
- Cyprus
- Czech. Republic
- Denmark
- Finland
- Greece
- Hungary
- Ireland
- Lithuania
- Luxembourg
- Norway
- Poland
- Portugal
- Romania
- Russia
- Serbia
- Slovenia
- Sweden
- Switzerland
- Ukraine

Middle east
- Bahrain
- Iran
- Israel
- Jordan
- Kingdom of Saudi Arabia
- Kuwait
- Lebanon
- Pakistan
- Qatar
- Sultanate of Oman
- Syria
- Turkey
- Yemen

Oceania
- Australia
- French Polynesia
- New Caledonia
- New Zealand

SITE 108 A

CARTE 017 A

This document is not a contract. SOCOMEC reserves the right to modify features without prior notice in view of continued improvement. 2008 - 2009

This document is not a contract. SOCOMEC reserves the right to modify features
without prior notice in view of continued improvement. 2008 - 2009

This document is not a contract. SOCOMEC reserves the right to modify features
without prior notice in view of continued improvement. 2008 - 2009

This document is not a contract. SOCOMEC reserves the right to modify features
without prior notice in view of continued improvement. 2008 - 2009

Production: SOCOMEC
Photography: Martin Bernhart and SOCOMEC
Printing: Jean LAMOUR - 54320 MAXEVILLE

Non contractual document. © 2008, Socomec SA. All rights reserved.

Socomec worldwide

IN EUROPE

BELGIUM
SOCOMEC BELGIE
B - 1190 Brussel
Tel. +32 (0)2 340 02 30 - Fax +32 (0)2 346 28 99
be.scp.order@socomec.com

FRANCE
SOCOMEC
F - 67235 Benfeld Cedex
Tel. +33 (0)3 88 57 41 41 - Fax +33 (0)3 88 74 08 00
scp.vex@socomec.com

GERMANY
SOCOMEC GmbH
D - 76275 Ettlingen
Tel. +49 (0)7243 65 29 2 0 - Fax +49 (0)7243 65 29 2 13
info@socomec.com

ITALY
SOCOMEC Elettrotecnica s.r.l.
I - 20098 San Giuliano Milanese (MI)
Tel. +39 02 98 498 21 - Fax +39 02 98 243 310
it.scp.info@socomec.com

SPAIN
SOCOMEC ELECTRO, S.L.
E - 08310 Argentona (Barcelona)
Tel. +34 93 741 60 67 - Fax. +34 93 757 49 52
es.scp.info@socomec.com

THE NETHERLANDS
SOCOMEC B.V.
NL - 3992 De Houten
Tel. +31 (0)30 63 71 504 - Fax +31 (0)30 63 72 166
info@socomec.nl

UNITED KINGDOM
SOCOMEC Ltd
Hitchin Hertfordshire SG4 0TY
Tel. +44 (0)1462 440033 - Fax +44 (0)1462 431143
sales.uk.scp@socomec.com

IN ASIA

NORTH EAST ASIA
SOCOMEC CHINA
CN - 20030 P.R.C Shanghai
Tel. +86 21 5298 9555 - Fax +86 21 6228 3468
socomec@socomec-shanghai.com

SOUTH EAST ASIA & PACIFIC
SOCOMEC SWITCHING AND PROTECTION
UBI TECHPARK - Singapore
Tel. +65 65 07 94 90 - Fax +65 65 47 86 93
sg.scp.socomec@socomec.com

SOUTH ASIA
SOCOMEC-HPL PVT
Gurgaon, Haryana - India
Tel. +91 124 2210970 – 74 - Fax +91 124 2210976
in.scp.socomec-hpl@socomec.com

IN MIDDLE EAST

UNITED ARAB EMIRATES
SOCOMEC Middle East
Dubai, U.A.E.
Tel. +971 4 88 11 623 - Fax +971 4 88 19 887
sales.ae.scp@socomec.com

HEAD OFFICE

SOCOMEC GROUP
S.A. SOCOMEC capital 11 102 300 €
R.C.S. Strasbourg B 548 500 149
B.P. 60010 - 1, rue de Westhouse
F-67235 Benfeld Cedex - FRANCE

INTERNATIONAL SALES DEPARTMENT

SOCOMEC
1, rue de Westhouse - B.P. 60010
F - 67235 Benfeld Cedex - FRANCE
Tel. +33 (0)3 88 57 41 41 - Fax +33 (0)3 88 74 08 00
scp.vex@socomec.com

www.socomec.com

Ref. DCG 930131 - 08/2008

Non contractual document. © 2008, Socomec SA. All rights reserved.

VALID FOR FRANCE

socomec
Innovative Power Solutions